PRELIMINARY MAINTENANCE MANUAL

RD-301A

SYSTEMS, INC.

PRELIMINARY MAINTENANCE MANUAL

RD-301A
RADAR TEST SET

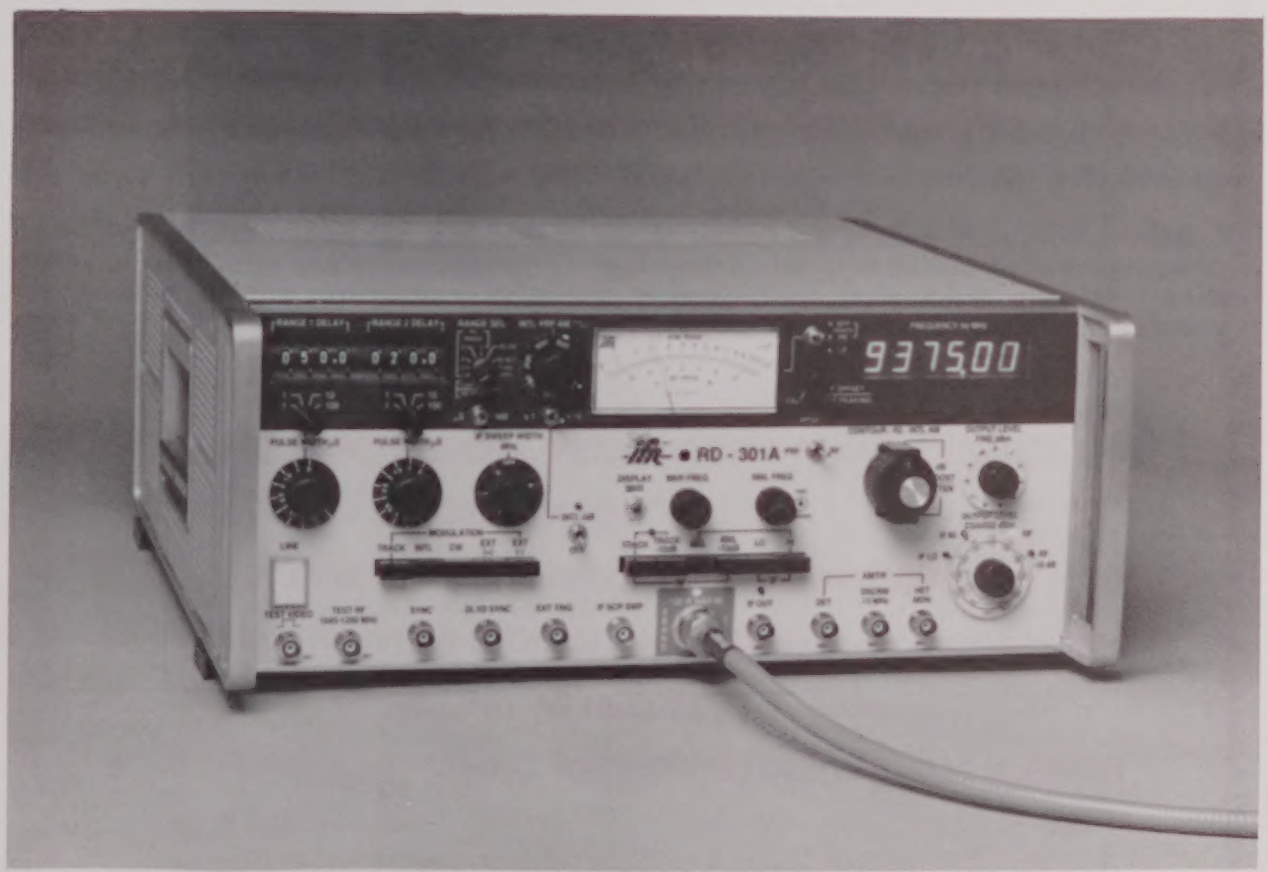

10200 West York Street / Wichita, Kansas 67215 U.S.A. / (316) 522-4981 / TWX 910-741-6952

1002-9001-300

PUBLISHED BY
IFR SYSTEMS INC.
Wichita, Kansas

COPYRIGHT © 1993 by IFR SYSTEMS, INC.

All rights reserved. Printed in the United States of America. No part of this publication may be reproduced, stored in a retrieval system, or transmitted in any form or by any means, electronic, mechanical, photocopying, recording or otherwise without the prior permission of the publisher.

WARNING

HIGH VOLTAGE EQUIPMENT

THIS EQUIPMENT CONTAINS CERTAIN CIRCUITS AND/OR COMPONENTS OF EXTREMELY HIGH VOLTAGE POTENTIALS, CAPABLE OF CAUSING SERIOUS BODILY INJURY OR DEATH. WHEN PERFORMING ANY OF THE PROCEDURES CONTAINED IN THIS MANUAL, HEED ALL APPLICABLE SAFETY PRECAUTIONS.

RESCUE OF SHOCK VICTIMS

1. DO NOT ATTEMPT TO PULL OR GRAB THE VICTIM.
2. IF POSSIBLE, TURN OFF THE ELECTRICAL POWER.
3. IF YOU CANNOT TURN OFF ELECTRICAL POWER, PUSH, PULL OR LIFT THE VICTIM TO SAFETY USING A WOODEN POLE, ROPE OR SOME OTHER DRY INSULATING MATERIAL.

FIRST AID

1. AS SOON AS VICTIM IS FREE OF CONTACT WITH SOURCE OF ELECTRICAL SHOCK, MOVE VICTIM A SHORT DISTANCE AWAY FROM SHOCK HAZARD.
2. CALL FOR DOCTOR AND/OR AMBULANCE, IMMEDIATELY.
3. IF BREATHING HAS STOPPED; ADMINISTER CARDIO-PULMONARY RESUSCITATION (CPR), AS NEEDED.
4. IF VICTIM IS BREATHING, ATTEMPT TO CONTROL ALL SERIOUS BLEEDING.
5. KEEP VICTIM WARM, QUIET AND FLAT ON HIS/HER BACK.

CAUTION: INTEGRATED CIRCUITS AND SOLID STATE DEVICES SUCH AS MOS FETS, ESPECIALLY CMOS TYPES, ARE SUSCEPTIBLE TO DAMAGE BY ELECTROSTATIC DISCHARGES RECEIVED FROM IMPROPER HANDLING, THE USE OF UNGROUNDED TOOLS, AND IMPROPER STORAGE AND PACKAGING. ANY MAINTENANCE TO THIS UNIT MUST BE PERFORMED WITH THE FOLLOWING PRECAUTIONS:

- BEFORE USE IN A CIRCUIT, KEEP ALL LEADS SHORTED TOGETHER EITHER BY THE USE OF VENDOR-SUPPLIED SHORTING SPRINGS OR BY INSERTING LEADS INTO A CONDUCTIVE MATERIAL.
- WHEN REMOVING DEVICES FROM THEIR CONTAINERS,GROUND THE HAND BEING USED WITH A CONDUCTIVE WRISTBAND.
- TIPS OF SOLDERING IRONS AND/OR ANY TOOLS USED MUST BE GROUNDED.
- DEVICES MUST NEVER BE INSERTED INTO OR REMOVED FROM CIRCUITS WITH POWER ON.
- PC BOARDS, WHEN TAKEN OUT OF THE SET, MUST BE LAID ON A GROUNDED CONDUCTIVE MAT OR STORED IN A CONDUCTIVE CONTAINER. REMOVE ANY BUILT-IN POWER SOURCE, SUCH AS A BATTERY, BEFORE LAYING PC BOARDS ON A CONDUCTIVE MAT OR STORING IN A CONDUCTIVE CONTAINER.
- PC BOARDS, IF BEING SHIPPED TO THE FACTORY FOR REPAIR, MUST BE PACKAGED IN A CONDUCTIVE BAG AND PLACED IN A WELL-CUSHIONED SHIPPING BAG.

CAUTION: THE USE OF SIGNAL GENERATORS FOR MAINTENANCE AND OTHER ACTIVITIES CAN BE A SOURCE OF ELECTROMAGNETIC INTERFERENCE TO AVIATION RECEIVERS, WHICH CAN CAUSE DISRUPTION AND INTERFERENCE TO AERONAUTICAL SERVICE OUT TO A DISTANCE OF SEVERAL MILES.

CAUTION: USERS OF THIS EQUIPMENT SHOULD SCRUTINIZE ANY OPERATION WHICH RESULTS IN RADIATION OF A SIGNAL (DIRECTLY OR INDIRECTLY) AND ENSURE COMPLIANCE WITH INSTRUCTIONS IN FAA CIRCULAR AC 170-6C, DATED FEBRUARY 19, 1981.

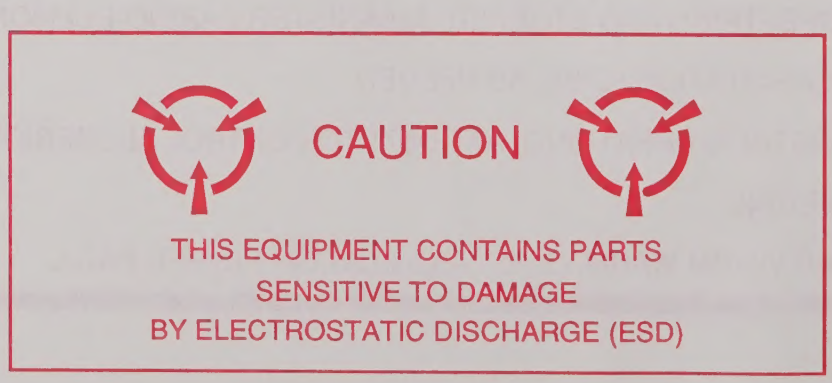

TABLE OF CONTENTS

Calibration/Verification 2-2-2

A. General
B. Performance Requirements
C. Test Equipment Requirements
D. Preliminary Operations
E. Test Record
F. Verification Procedures
G. Verification Data Sheet
H. Calibration Procedures
I. Calibration Data Sheet

PC Boards and Schematics

Product Structure
Composite Assembly
Main Wire Harness
Rear Panel Assembly
Power Supply Assembly
Floor Assembly
Heterodyne Block Assembly
Coupler/Splitter Assembly
Video PC Board Assembly
VCO #2 Assembly
AGC PC Board Assembly
Main Diode Switch
X-Band Front End
8.25 GHz LO
IF Marker/Oscillator PC Board Assembly
Card Frame Assembly
Range #1 PC Board Assembly
Range #2 PC Board Assembly
Discriminator #2 PC Board Assembly
Discriminator #1 PC Board Assembly
475/570-775 MHz Filter Assembly
Delay Line Assembly
Display Counter Assembly
Counter Gating PC Board Assembly
Counter Display PC Board Assembly
Counter Logic PC Board Assembly
200 V Power Supply PC Board Assembly
Prescaler PC Board Assembly
Front Panel Assembly
Modulation Mode Switch Assembly
RF Mode Switch PC Board Assembly
Range Discrete PC Board Assembly
Range Digit PC Board Assembly
IF Generator Power Amplifier PC Board Assembly

TABLE OF CONTENTS

Appendix A - I/O Connectors and Pin-Out Table
Appendix B - R1, R2 AUTO Threshold Adjustment
Appendix C - Test Equipment Requirements
Appendix D - Test Equipment Construction
Appendix E - Metric/British Imperial Conversion Table with Nautical Distance Conversions
Appendix F - Abbreviations

2. Calibration/Verification Procedures

A. General

VERIFICATION PROCEDURE	PAGE
RF Signal Generator	7
IF Signal Generator	24
INTL Modulation/PRF Counter	30
Range	32
Power Meter	36
XMTR DSCRM .1V/MHz Connector	39
Inputs	41

CALIBRATION PROCEDURE	PAGE
Power Supply	53
100 MHz Clock	56
8.25 GHz LO	57
RF Display Limits	59
Marker Oscillator	60
IF Oscillator	62
IF Generator Power Amplifier	66
External AM	68
Levelers	69
Internal PRF	75
Pulse Width	76
Range Delay	80
Power Meter	82
Discriminator	85

(1) Calibration/Verification Schedule

(a) Failure to Meet Specifications

If, during the course of normal operation, the RD-301A fails to meet the performance specifications according to 1-3-1 in the RD-301A Operation Manual, Calibration/Verification Procedures should be performed.

If the RD-301A fails the Performance Evaluation in 1-2-3 of the RD-301A Operation Manual, Calibration/Verification Procedures should be performed.

If any failure occurs during performance of Verification Procedures, pertinent Calibration Procedures should be performed according to 2-2-2, Table 1.

(b) Assembly Replacement

If one or more RD-301A assemblies are replaced, Calibration Procedures should be performed according to 2-2-2, Table 2.

(c) Annual Calibration/Verification

IFR Systems, Inc. recommends an annual Calibration/Verification on the RD-301A to maintain proper testing standards.

(2) Controls, Connectors and Indicators

The various RD-301A controls, connectors and indicators specified in the Calibration/Verification Procedures are followed by an item number. Refer to 2-2-2, Figure 1 for location of each control, connector and indicator.

(3) Disassembly Requirements

No disassembly is required to perform Verification Procedures. The top cover is removed when performing Calibration Procedures. Other disassembly procedures are performed only as necessary.

B. Performance Requirements

It is strongly recommended that personnel thoroughly read and understand all steps of the procedures to be performed and be familiar with the circuit under test. Knowledge of power, frequency and waveform to be expected at each test point is recommended.

(1) PANEL Meter

Before applying power to RD-301A, verify PANEL Meter (43) indicates zero on power scale. Adjust PANEL METER ZERO Control (45) as needed.

(2) Serialized Coaxial Cable and Waveguide Coupler

The RD-301A Radar Test Set includes the RD-301A, Serialized Coaxial Cable and Waveguide Coupler. All equipment must be available to verify and calibrate the system.

C. Test Equipment Requirements

Appendix C contains a list of test equipment suitable for performing any procedure contained in this manual. Other equipment meeting specifications listed in Appendix C may be substituted in place of recommended models.

NOTE: For certain procedures in this manual, the equipment listed in Appendix C may exceed minimum required specifications.

NOTE: High quality RG58 BNC coaxial cables should be used to connect test equipment.

IF THIS VERIFICATION PROCEDURE FAILS ↓ / THE FOLLOWING CALIBRATION PROCEDURES MUST BE PERFORMED →		POWER SUPPLY	100 MHz CLOCK	
RF SIGNAL GENERATOR	FREQUENCY AND RF COUNTER	●	●	
	TRACKING AND ΔF OFFSET	●	●	
	OUTPUT POWER AND INTERNAL AM AMPLITUDE			
	PULSE WIDTH	●	●	
	RF ON/OFF RATIO			
IF SIGNAL GENERATOR	FREQUENCY AND IF COUNTER	●	●	
	SWEEP WIDTH	●	●	
	MARKER FREQUENCY	●	●	
	POWER	●	●	
	PULSE WIDTH	●	●	
	IF ON/OFF RATIO	●	●	
INTL MODULATION/PRF COUNTER		●	●	
RANGE		●	●	
POWER METER				
XMTR DSCRM .1V/MHz CONNECTOR		●	●	
INPUTS	AM EXT INPUT CONNECTOR			
	EXT TRIG CONNECTOR			

8.25 GHz LO	RF DISPLAY LIMITS	MARKER OSCILLATOR	IF OSCILLATOR	IF GENERATOR POWER AMPLIFIER	EXTERNAL AM	LEVELERS	INTERNAL PRF	PULSE WIDTH	RANGE DELAY	POWER METER	DISCRIMINATOR
●	●										
●								●			●
						●					
●								●			
						●					
●			●								
●			●								
●		●									
●			●	●							
●								●			
●			●	●		●					
						●	●				
●							●	●	●		
										●	
●								●			●
					●						

9002002

Verification Failure Calibration Requirements
Table 1

IF THIS ASSEMBLY IS REPAIRED OR REPLACED ↓ / THE FOLLOWING CALIBRATION PROCEDURES MUST BE PERFORMED →	POWER SUPPLY	100 MHz CLOCK	8.25 GHz LO	RF DISPLAY LIMITS
8.25 GHz LO	●	●	●	
475/570-775 MHz FILTER ASSEMBLY	●	●	●	
AGC PC BOARD ASSEMBLY	●	●	●	●
COUPLER/SPLITTER ASSEMBLY	●	●	●	
DELAY LINE ASSEMBLY	●	●	●	
DISCRIMINATOR #1 PC BOARD ASSEMBLY	●	●	●	
DISCRIMINATOR #2 PC BOARD ASSEMBLY	●	●	●	
DISPLAY COUNTER ASSEMBLY	●	●	●	●
FRONT PANEL ASSEMBLY	●	●	●	
HETERODYNE ASSEMBLY				
IF GEN PWR AMPL PC BOARD ASSEMBLY	●	●	●	
IF MKR/OSC PC BOARD ASSEMBLY	●	●	●	
MAIN DIODE SWITCH ASSEMBLY	●			
POWER SUPPLY ASSEMBLY	●			
PRESCALER PC BOARD ASSEMBLY	●	●	●	
RANGE #1 PC BOARD ASSEMBLY	●	●		
RANGE #2 PC BOARD ASSEMBLY	●	●	●	
VCO #2 ASSEMBLY	●	●	●	●
VIDEO PC BOARD ASSEMBLY	●	●	●	
X-BAND FRONT END	●	●	●	

MARKER OSCILLATOR	IF OSCILLATOR	IF GENERATOR POWER AMPLIFIER	EXTERNAL AM	LEVELERS	INTERNAL PRF	PULSE WIDTH	RANGE DELAY	POWER METER	DISCRIMINATOR
						●			●
●	●	●	●	●					
						●			●
						●			●
						●			●
						●			●
	●								
				●	●	●	●	●	●
	●	●							
●	●								
				●					
●									
							●		
					●	●			
				●		●			●
						●		●	●
				●		●		●	●

9002001

Assembly Replacement Calibration Requirements
Table 2

D. Preliminary Operations

(1) CAUTION and WARNING Labels

Extreme care should be exercised when performing procedural steps preceded by a CAUTION or WARNING Label. CAUTION labels appear where possibility of damage to equipment exists. WARNING labels denote conditions where bodily injury or death may result.

(2) Safety Precautions

WARNING: REMOVE ALL JEWELRY AND OTHER CONDUCTIVE APPAREL, BEFORE PERFORMING ANY CALIBRATION/VERIFICATION PROCEDURES INVOLVING LIVE CIRCUITS.

WARNING: WHEN WORKING WITH LIVE CIRCUITS OF HIGH POTENTIAL, KEEP ONE HAND IN POCKET OR BEHIND BACK TO AVOID SERIOUS SHOCK HAZARD.

WARNING: USE ONLY INSULATED TROUBLESHOOTING TOOLS WHEN WORKING WITH LIVE CIRCUITS.

WARNING: FOR ADDED INSULATION, PLACE RUBBER BENCH MAT UNDERNEATH ALL POWERED BENCH EQUIPMENT, AS WELL AS A RUBBER MAT UNDERNEATH TECHNICIAN'S CHAIR.

WARNING: HEED ALL WARNINGS AND CAUTIONS CONCERNING MAXIMUM VOLTAGES AND POWER INPUTS.

(3) Environmental Considerations

The RD-301A Calibration and Verification Procedures require performance in the following environment:

- Temperature Range: 20° to 25° C (68° to 77° F)
- Stabilization Period: 30 minutes
- Power Requirements: 103 to 253 VAC;
  50 to 440 Hz;
  ≤150 W

E. Test Record

Calibration and Verification Data Sheets are provided for recording results obtained while performing Calibration and Verification Procedures.

NOTE: It is recommended the technician reproduce copies of the Calibration and Verification Data Sheets rather than use copies in this manual.

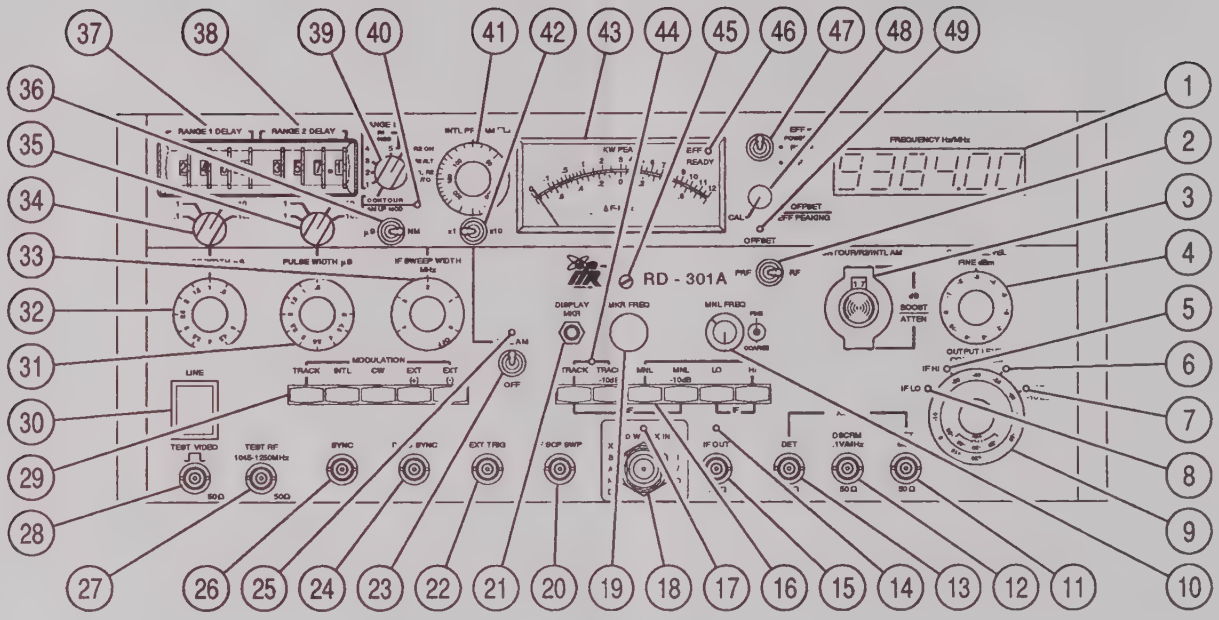

9007001

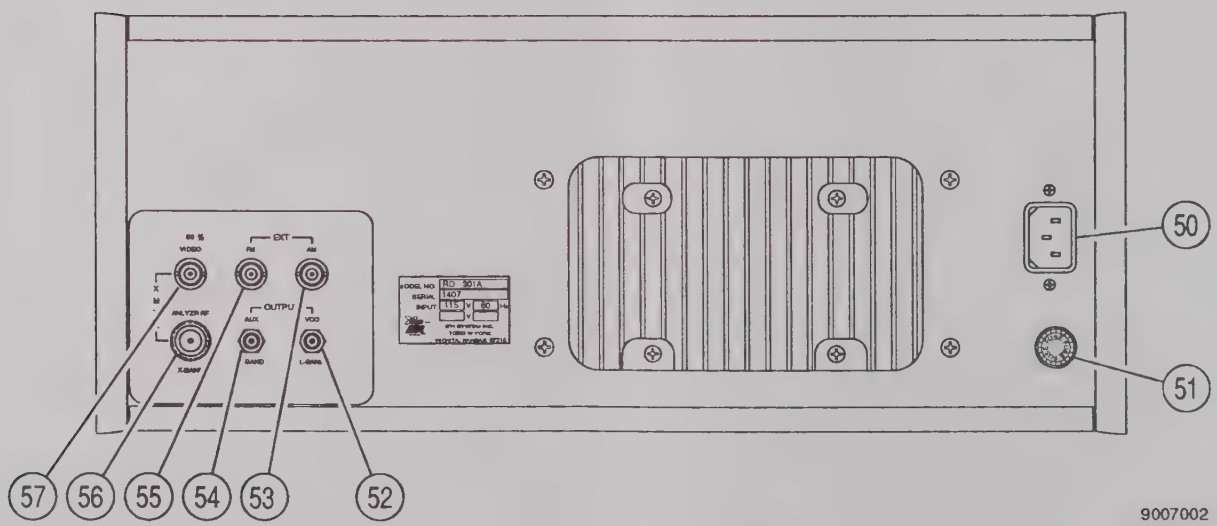

9007002

1. FREQUENCY Hz/MHz Digital Display
2. PRF/RF Switch
3. CONTOUR/R2/INTL AM dB BOOST/ATTEN Control
4. OUTPUT LEVEL FINE dBm Control
5. IF HI Indicator
6. RF Indicator
7. RF -10 dB Indicator
8. IF LO Indicator
9. OUTPUT LEVEL COARSE dBm Control
10. MNL FREQ Controls
11. XMTR HET MON Connector (J49028)
12. XMTR DSCRM .1V/MHz Connector (J49027)
13. XMTR DET Connector (J49026)
14. IF OUT Indicator
15. IF OUT Connector (J49025)
16. RF/IF MODE Pushbutton Switches
17. X-BAND SIGNAL Indicator
18. X-BAND I/O Connector (J49016)
19. MKR FREQ Control
20. IF SCP SWP Connector (J49012)
21. DISPLAY MKR Switch
22. EXT TRIG Connector (J49024)
23. INTL AM Switch
24. DLYD SYNC Connector (J49023)
25. INTL AM Indicator
26. SYNC Connector (J49022)
27. TEST RF 1045-1250 MHz Connector (J49021)
28. TEST VIDEO Connector (J49020)
29. MODULATION MODE Pushbutton Switches
30. LINE Switch
31. PULSE WIDTH µS Control (RANGE 2)
32. PULSE WIDTH µS Control (RANGE 1)
33. SWEEP WIDTH MHz Control
34. PULSE WIDTH MULTIPLIER Control (RANGE 1)
35. PULSE WIDTH MULTIPLIER Control (RANGE 2)
36. µS/NM Switch
37. RANGE 1 DELAY Thumbwheels
38. RANGE 2 DELAY Thumbwheels
39. RANGE SEL Switch
40. CONTOUR/AM UP MOD Indicator
41. INTL PRF/AM Control
42. X1/X10 INTL PRF/AM Switch
43. PANEL Meter
44. TRACK Indicator
45. PANEL METER ZERO Control
46. EFF READY Indicator
47. METER SELECT Switch
48. ΔF OFFSET/EFF PEAKING Control
49. OFFSET Indicator
50. AC INPUT Connector (J49008)
51. FUSE
52. VCO L-BAND OUTPUT Connector (J49004)
53. AM EXT INPUT Connector (J49005)
54. AUX X-BAND OUTPUT Connector (J49002)
55. FM EXT INPUT Connector (J49006)
56. ANLYZER RF X-BAND XMTR Connector (J49003)
57. 50% VIDEO XMTR Connector (J49007)

RD-301A Front and Rear Panels
Figure 1

F. Verification Procedures

(1) RF Signal Generator

(a) Frequency and RF Counter

TEST EQUIPMENT: 1 Frequency Counter

STEP	PROCEDURE

1. Set RD-301A as follows:

CONTROL		SETTING
(2)	PRF/RF Switch	***RF***
(10)	MNL FREQ Controls	***fully ccw***
(16)	RF/IF MODE Pushbutton Switches	***RF MNL***
(29)	MODULATION MODE Pushbutton Switches	***INTL***

2. Apply power to RD-301A and allow for 30 minute stabilization period.
3. Connect Frequency Counter high frequency input to X-BAND I/O Connector (18).
4. Verify ≤9295 MHz on Frequency Counter. Record reading.
5. Verify FREQUENCY Hz/MHz Digital Display (1) equals Frequency Counter reading from Step 4 (±250 kHz).
6. Adjust MNL FREQ Controls (10) ***fully cw***.
7. Verify ≥9500 MHz on Frequency Counter. Record reading.
8. Verify FREQUENCY Hz/MHz Digital Display (1) equals Frequency Counter reading from Step 7 (±250 kHz).
9. If RD-301A fails any step, perform Calibration Procedures according to 2-2-2, Table 1.
10. Disconnect test equipment.

(b) Tracking and ΔF Offset

TEST EQUIPMENT:
1 20 dB Coupler
1 Frequency Counter
1 Oscilloscope
1 Spectrum Analyzer
1 TWT Amplifier
1 X-Band Signal Generator

STEP PROCEDURE

1. Set RD-301A as follows:

CONTROL		SETTING
(2)	PRF/RF Switch	*RF*
(4)	OUTPUT LEVEL FINE dBm Control	*0*
(9)	OUTPUT LEVEL COARSE dBm Control	*-50*
(16)	RF/IF MODE Pushbutton Switches	*RF TRACK*
(29)	MODULATION MODE Pushbutton Switches	*CW*

2. Apply power to RD-301A and allow for 30 minute stabilization period.

   CAUTION: SOME TWT AMPLIFIERS PRODUCE LARGE OUTPUT POWER SPIKES ON POWER-UP. TEST TWT AMPLIFIER BEFORE CONNECTING TO RD-301A.

3. Connect test equipment as shown in 2-2-2, Figure 2.

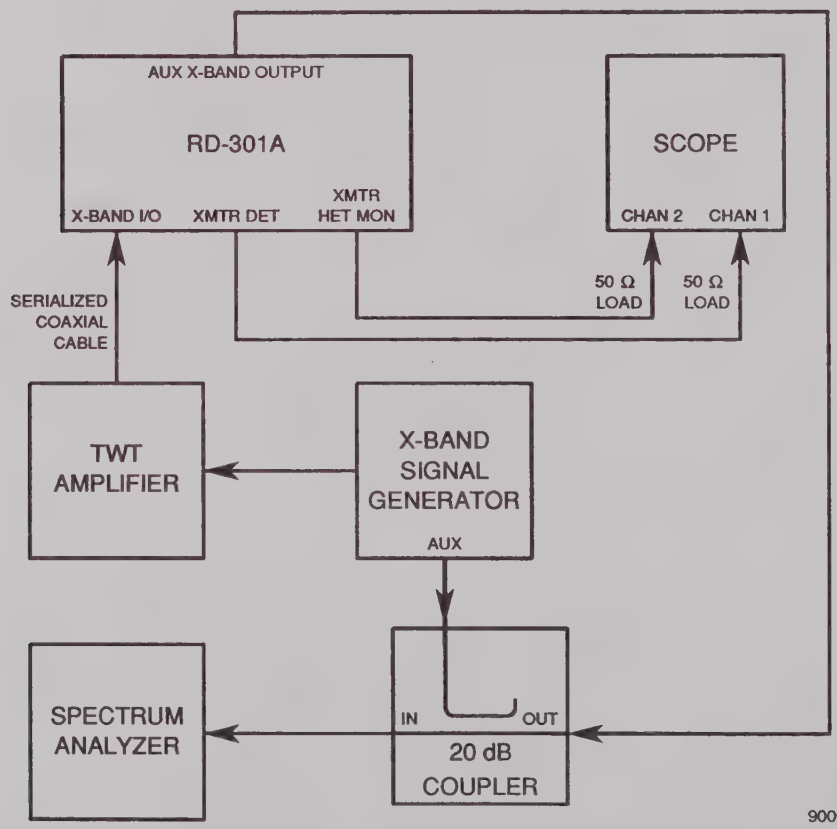

Tracking Verification Setup
Figure 2

STEP PROCEDURE

NOTE: 20 dB Coupler is used in reverse direction to combine signals and provide greatest isolation.

4. Set TWT Amplifier power On and in Standby mode.

5. Set Oscilloscope with both channels dc coupled as follows:

CONTROL	SETTING
Sweep Speed	5 µs/Div
Amplitude Scale	50 mV/Div
Trigger	Channel 1

6. Set Spectrum Analyzer as follows:

CONTROL	SETTING
Center Frequency	9295 MHz
Frequency Span	5 kHz/Div
Resolution Bandwidth	3 kHz
Amplitude Scale	10 dB/Div
Reference Level	-40 dBm

7. Set X-Band Signal Generator as follows:

CONTROL	SETTING
Frequency	9295 MHz
Pulse Width	30 µs
PRF	500 Hz

CAUTION: CONNECTIONS TO TWT AMPLIFIER MUST BE CORRECT BEFORE SWITCHING TO OPERATE MODE.

8. Set TWT Amplifier to Operate mode.

9. Set X-Band Signal Generator output level for PANEL Meter (43) reading of ***.1 kW***.

TRACKING

10. Identify signals on Spectrum Analyzer and adjust attenuation so signals are similar in power level. Refer to 2-2-2, Figure 3.

NOTE: When both signals overlap, RD-301A tracking signal is identified by setting METER SELECT Switch (47) to ***ΔF*** and varying ΔF OFFSET/EFF PEAKING Control (48). Another identifying method is narrowing resolution bandwidth of Spectrum Analyzer or changing OUTPUT LEVEL COARSE dBm Control (9) and observing change in signal level.

11. Verify frequency difference between signals is ≤25 kHz.

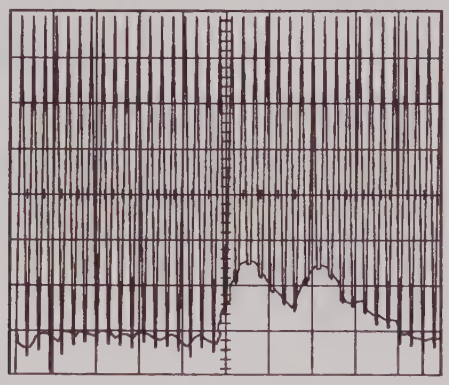

9016008

RD-301A Tracking Spectrum Analyzer Signals
Figure 3

12. Adjust Oscilloscope and verify XMTR HET MON Connector (11) output display on Channel 2 shows relatively parallel lines according to 2-2-2, Figure 4.

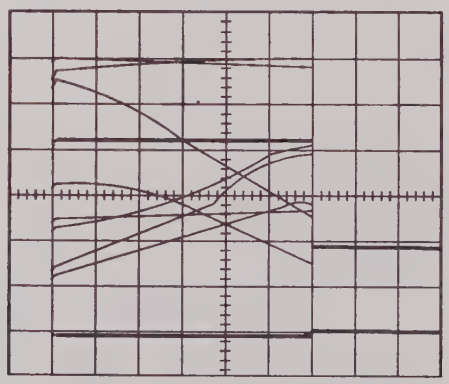

9016009

RD-301A Heterodyne Monitor Tracking Output
Figure 4

13. Set X-Band Signal Generator modulation pulse width to 2 µs.

14. Verify frequency difference between signals is ≤25 kHz.

15. Set Oscilloscope sweep speed to 500 ns/Div and adjust to verify XMTR HET MON Connector (11) output display on Channel 2 shows relatively parallel lines according to 2-2-2, Figure 4.

16. Set Spectrum Analyzer frequency span to 10 kHz/Div.

17. Set X-Band Signal Generator modulation pulse width to 0.5 µs.

18. Verify frequency difference between signals is ≤60 kHz.

STEP PROCEDURE

19. Set Oscilloscope sweep speed to 100 ns/Div and adjust to verify XMTR HET MON Connector (11) output display on Channel 2 shows relatively parallel lines according to 2-2-2, Figure 4.

20. Set Spectrum Analyzer frequency span to 100 kHz/Div and resolution bandwidth to 1 kHz.

21. Set X-Band Signal Generator modulation pulse width to 0.1 µs.

22. Verify frequency difference between signals is ≤600 kHz.

23. Set Oscilloscope sweep speed to 50 ns/Div and adjust to verify XMTR HET MON Connector (11) output display on Channel 2 shows relatively parallel lines according to 2-2-2, Figure 4.

24. Set Spectrum Analyzer frequency span to 250 kHz/Div.

    CAUTION: NARROW WIDTH PULSES MAY INCREASE TWT AMPLIFIER POWER OUTPUT TO HIGH LEVELS THAT MAY DAMAGE EQUIPMENT. WIDEN NARROW PULSE WIDTH AS SOON AS POSSIBLE.

25. Set X-Band Signal Generator modulation pulse width to 0.05 µs.

26. Verify frequency difference between signals is ≤2 MHz.

27. Adjust Oscilloscope and verify XMTR HET MON Connector (11) output display on Channel 2 shows relatively parallel lines according to 2-2-2, Figure 4.

28. Set X-Band Signal Generator modulation pulse width to 30 µs and frequency to 9400 MHz.

29. Set Spectrum Analyzer as follows:

CONTROL	SETTING
Center Frequency	9400 MHz
Frequency Span	5 kHz/Div
Resolution Bandwidth	3 kHz

30. Set Oscilloscope sweep speed to 5 µs/Div.

31. Repeat Steps 9 through 27.

32. Set X-Band Signal Generator modulation pulse width to 30 µs and frequency to 9500 MHz.

STEP PROCEDURE

33. Set Spectrum Analyzer as follows:

CONTROL	SETTING
Center Frequency	9500 MHz
Frequency Span	5 kHz/Div
Resolution Bandwidth	3 kHz

34. Set Oscilloscope sweep speed to 5 µs/Div.

35. Repeat Steps 9 through 27.

36. Set X-Band Signal Generator modulation pulse width to 30 µs and frequency to 9295 MHz.

37. Set Spectrum Analyzer as follows:

CONTROL	SETTING
Center Frequency	9295 MHz
Frequency Span	5 kHz/Div
Resolution Bandwidth	3 kHz
Reference Level	-20 dBm

38. Set Oscilloscope sweep speed to 5 µs/Div.

39. Set X-Band Signal Generator output level for PANEL Meter (43) reading of ***12 kW***.

40. Repeat Steps 10 through 35.

TRACK MODULATION PRF

41. Set X-Band Signal Generator as follows:

CONTROL	SETTING
Frequency	9295 MHz
Pulse Width	5 µs
PRF	50 Hz

42. Set X-Band Signal Generator output level for PANEL Meter (43) reading of ***.5 kW***.

43. Set Spectrum Analyzer as follows:

CONTROL	SETTING
Center Frequency	9295 MHz
Frequency Span	5 kHz/Div
Resolution Bandwidth	3 kHz

44. Set PRF/RF Switch (2) to ***PRF***.

STEP PROCEDURE

45. Verify FREQUENCY Hz/MHz Digital Display (1) reads ***50 Hz*** (±1 Hz).

46. Verify frequency difference between signals is ≤25 kHz.

47. Set Oscilloscope sweep speed to 5 µs/Div and adjust to verify XMTR HET MON Connector (11) output display on Channel 2 shows relatively parallel lines according to 2-2-2, Figure 4.

48. Set X-Band Signal Generator PRF to 2 kHz.

49. Verify FREQUENCY Hz/MHz Digital Display (1) reads ***2000 Hz*** (±1 Hz).

50. Verify frequency difference between signals is ≤25 kHz.

51. Adjust Oscilloscope and verify XMTR HET MON Connector (11) output display on Channel 2 shows relatively parallel lines according to 2-2-2, Figure 4.

52. Set X-Band Signal Generator PRF to 20 kHz.

    NOTE: Spectrum Analyzer cannot be used effectively at 20 kHz PRF.

53. Verify FREQUENCY Hz/MHz Digital Display (1) reads ***20000 Hz*** (±3 Hz).

54. Adjust Oscilloscope and verify XMTR HET MON Connector (11) output display on Channel 2 shows relatively parallel lines according to 2-2-2, Figure 4.

55. Set X-Band Signal Generator as follows:

CONTROL	SETTING
Frequency	9400 MHz
Pulse Width	5 µs
PRF	50 Hz

56. Set X-Band Signal Generator output level for PANEL Meter (43) reading of ***.5 kW***.

57. Set Spectrum Analyzer center frequency to 9400 MHz.

58. Repeat Steps 45 through 54.

59. Set X-Band Signal Generator as follows:

CONTROL	SETTING
Frequency	9500 MHz
Pulse Width	5 µs
PRF	50 Hz

STEP PROCEDURE

60. Set X-Band Signal Generator output level for PANEL Meter (43) reading of ***.5 kW***.

61. Set Spectrum Analyzer center frequency to 9500 MHz

62. Repeat Steps 45 through 54.

ΔF OFFSET

63. Set X-Band Signal Generator frequency to 9400 MHz.

64. Disconnect 20 dB Coupler from X-Band Signal Generator and AUX X-BAND OUTPUT Connector (54).

65. Connect AUX X-BAND OUTPUT Connector (54) to Frequency Counter.

66. Record Frequency Counter reading.

67. Set METER SELECT Switch (47) to ***ΔF***.

68. Adjust ΔF OFFSET/EFF PEAKING Control (48) until PANEL Meter (43) reads ***-.75 MHz***.

69. Verify Frequency Counter reading equals reading from Step 63 minus 750 kHz (±95 kHz).

70. Adjust Oscilloscope and verify XMTR HET MON Connector (11) output display on Channel 2 shows cross-hatching according to 2-2-2, Figure 5.

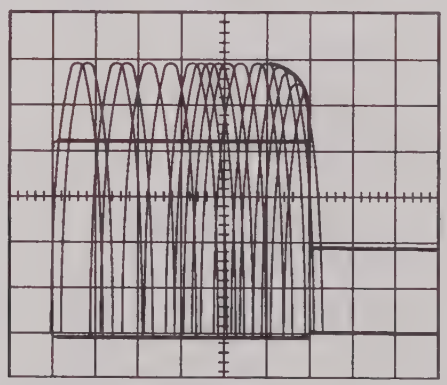

9016013

RD-301A Heterodyne Monitor ΔF Output
Figure 5

71. Adjust ΔF OFFSET/EFF PEAKING Control (48) until PANEL Meter (43) reads ***+.75 MHz***.

STEP	PROCEDURE

72. Verify Frequency Counter reading equals reading from Step 63 plus 750 kHz (±95 kHz). If not, perform Calibration Procedures according to 2-2-2, Table 1.

70. Adjust Oscilloscope and verify XMTR HET MON Connector (11) output display on Channel 2 shows cross-hatching according to 2-2-2, Figure 5.

71. If RD-301A fails any step, perform Calibration Procedures according to 2-2-2, Table 1.

72. Slowly decrease TWT Amplifier power and set to Standby mode for ≥15 minutes.

73. Disconnect test equipment.

(c) Output Power and Internal AM Amplitude

TEST EQUIPMENT:
1 20 dB Coupler
1 L-Band Signal Generator
1 Pulse Generator
1 Spectrum Analyzer
1 X-Band Signal Generator

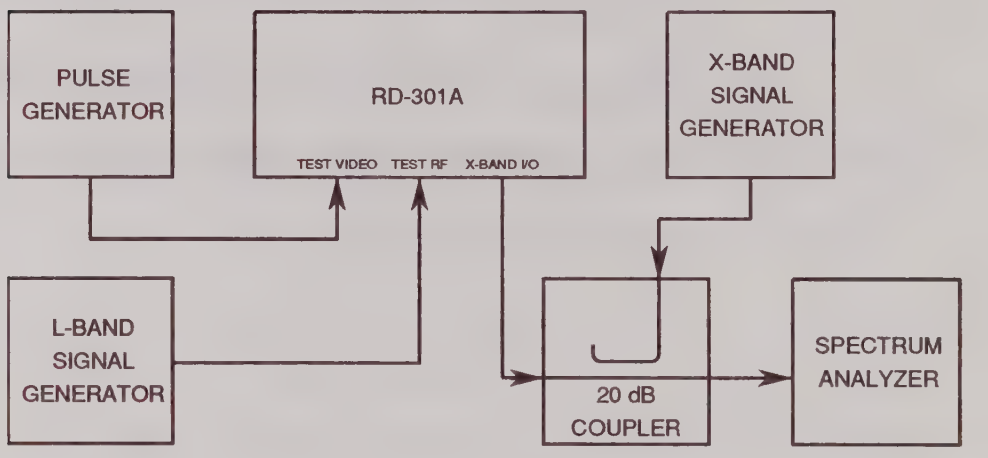

Output Power Verification Setup
Figure 6

STEP	PROCEDURE

1. Set RD-301A as follows:

CONTROL		SETTING
(2)	PRF/RF Switch	***RF***
(3)	CONTOUR/R2/INTL AM dB BOOST/ATTEN Control	***00***
(4)	OUTPUT LEVEL FINE dBm Control	***0***
(9)	OUTPUT LEVEL COARSE dBm Control	***-50***
(10)	MNL FREQ Controls	***9375 MHz***
(16)	RF/IF MODE Pushbutton Switches	***RF MNL***
(29)	MODULATION MODE Pushbutton Switches	***CW***
(39)	RANGE SEL Switch	***RINGS 1***

2. Apply power to RD-301A and allow for 30 minute stabilization period.
3. Connect test equipment as shown in 2-2-2, Figure 6.
4. Set L-Band Signal Generator for 1125 MHz CW signal at +7 dBm.
5. Set Pulse Generator for 5 µs pulse at TTL level and 1 kHz PRF.

STEP PROCEDURE

6. Connect RD-301A X-Band I/O Connector (18) and X-Band Signal Generator to 20 dB Coupler with coupler intentionally reversed for maximum isolation. Set X-Band Signal Generator for 9374.95 MHz CW signal. Adjust X-Band Signal Generator output to same level as RD-301A (≈-50 dBm).

   NOTE: X-Band Signal Generator must have power levels characterized for frequencies used in this procedure. Characterization must be accurate to ±0.1 dBm.

7. Set Spectrum Analyzer as follows:

CONTROL	SETTING
Center Frequency	9375 MHz
Frequency Span	50 kHz/Div
Resolution Bandwidth	1 kHz
Amplitude Scale	2 dB/Div
Reference Level	-50 dBm
Input Attenuation	0 dB

8. Set OUTPUT LEVEL FINE dBm Control (4) to each position from ***-1*** to ***-10***. Decrease X-Band Signal Generator output level by 1 dB for each setting. Verify difference between RD-301A output level and X-Band Signal Generator output level is ≤0.5 dB at each position. Record differences.

9. Set OUTPUT LEVEL FINE dBm Control (4) to ***0***.

10. Set OUTPUT LEVEL COARSE dBm Control (9) to each position from ***-60*** to ***-100***. Decrease X-Band Signal Generator output level by 10 dB for each setting. Adjust Spectrum Analyzer reference level and verify difference between RD-301A output level and X-Band Signal Generator output level is ≤2 dB at each position. Record differences.

11. Set Spectrum Analyzer resolution bandwidth to 300 Hz and reference level to -105 dBm.

12. Set OUTPUT LEVEL COARSE dBm Control (9) to ***-110***. Decrease X-Band Signal Generator output level by 10 dB from last setting in Step 10. Verify difference between RD-301A output level and X-Band Signal Generator output level is ≤2 dB. Record difference.

13. Set Spectrum Analyzer for 100 Hz Resolution Bandwidth and reference level to -115 dBm.

14. Set OUTPUT LEVEL COARSE dBm Control (9) to ***-120***. Decrease X-Band Signal Generator output level by 10 dB from setting in Step 12. Verify difference between RD-301A output level and X-Band Signal Generator output level is ≤2 dB. Record difference.

15. Set OUTPUT LEVEL COARSE dBm Control (9) to ***-80***.

STEP PROCEDURE

16. Set Spectrum Analyzer as follows:

CONTROL	SETTING
Frequency Span	Zero
Resolution Bandwidth	3 MHz
Amplitude Scale	2 dB/Div
Reference Level	-82 dBm

17. Set X-Band Signal Generator output to same level as RD-301A.

CONTOUR BOOST and INTERNAL AM UP MODULATION

NOTE: Because the same level control circuit is used for Contour Boost and Internal AM Up Modulation, levels only need to be verified once.

18. Set RANGE SEL Switch (39) to ***CONTOUR/AM UP MOD***. Verify difference between RD-301A output level and X-Band Signal Generator output level is ≤1 dB. Record difference.

19. Set CONTOUR/R2/INTL AM dB BOOST ATTEN Control (3) inner knob to each position from ***01*** to ***09***. Increase X-Band Signal Generator output level by 1 dB for each setting. Verify difference between RD-301A output level and X-Band Signal Generator output level is ≤0.5 dB at each position. Record differences.

20. Set CONTOUR/R2/INTL AM dB BOOST ATTEN Control (3) to ***10***. Increase X-Band Signal Generator Output Level by 1 dB from last setting in Step 19. Verify difference between RD-301A output level and X-Band Signal Generator output level is ≤1 dB. Record difference.

21. Set Spectrum Analyzer reference level to -70 dBm.

22. Set CONTOUR/R2/INTL AM dB BOOST ATTEN Control (3) to ***20***. Increase X-Band Signal Generator Output Level by 10 dB. Verify difference between RD-301A output level and X-Band Signal Generator output level is ≤1 dB. Record difference.

23. Set CONTOUR/R2/INTL AM dB BOOST ATTEN Control (3) to ***00***.

RANGE 2 ATTENUATION and INTERNAL AM DOWN MODULATION

NOTE: Because the same level control circuit is used for Range 2 Attenuation and Internal AM Down Modulation, levels only need to be verified once.

24. Set X-Band Signal Generator output to same level as RD-301A.

25. Set RANGE SEL Switch (39) to ***R2 ON***. Verify difference between RD-301A output level and X-Band Signal Generator output level is ≤1.5 dB. Record difference.

STEP PROCEDURE

26. Set CONTOUR/R2/INTL AM dB BOOST ATTEN Control (3) inner knob to each position from ***01*** to ***09***. Decrease X-Band Signal Generator output level by 1 dB for each setting. Verify difference between RD-301A R2 output level and X-Band Signal Generator output level is ≤1.5 dB at each position. Record differences.

27. Set CONTOUR/R2/INTL AM dB BOOST ATTEN Control (3) outer knob to each position from ***19*** to ***59***. Decrease X-Band Signal Generator output level by 10 dB for each setting. Verify difference between RD-301A R2 output level and X-Band Signal Generator output level is ≤1.5 dB at each position. Record differences.

28. Disconnect test equipment.

(d) Pulse Width

TEST EQUIPMENT:
1 6 dB Pad
1 Heterodyne Monitor
1 L-Band Signal Generator
1 Oscilloscope
1 X-Band to L-Band Down Converter (Refer to Appendix D.)

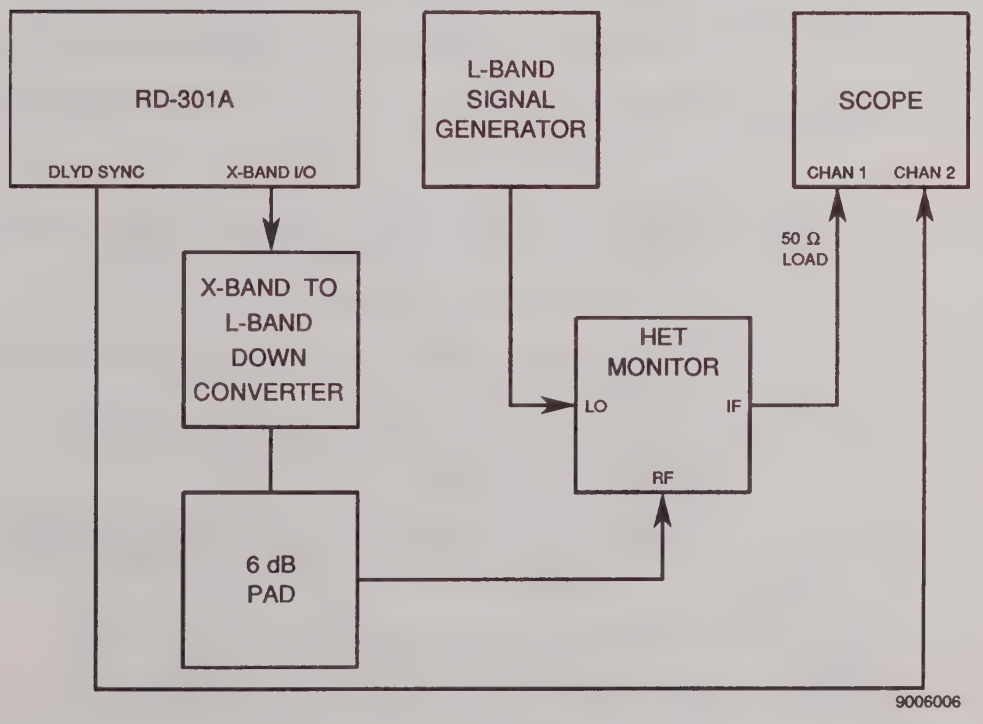

Pulse Width Verification Setup
Figure 7

STEP PROCEDURE

1. Set RD-301A as follows:

CONTROL		SETTING
(2)	PRF/RF Switch	***RF***
(4)	OUTPUT LEVEL FINE dBm Control	***0***
(9)	OUTPUT LEVEL COARSE dBm Control	***-50***
(10)	MNL FREQ Controls	***9375.0 MHz***
(16)	RF/IF MODE Pushbutton Switches	***RF MNL***
(29)	MODULATION MODE Pushbutton Switches	***INTL***
(31)	PULSE WIDTH µS Control (RANGE 2)	***.5***
(32)	PULSE WIDTH µS Control (RANGE 1)	***.5***
(34)	PULSE WIDTH MULTIPLIER Control (RANGE 1)	***.1***
(35)	PULSE WIDTH MULTIPLIER Control (RANGE 2)	***.1***
(36)	µS/NM Switch	***µS***
(37)	RANGE 1 DELAY Thumbwheels	***000.3***
(38)	RANGE 2 DELAY Thumbwheels	***900.0***
(39)	RANGE SEL Switch	***RINGS 1***
(42)	X1/X10 INTL PRF/AM Switch	***X10***

2. Apply power to RD-301A and allow for 30 minute stabilization period.

3. Connect test equipment as shown in 2-2-2, Figure 7.

   NOTE: Refer to Appendix D for X-Band to L-Band Down Converter.

4. Set L-Band Signal Generator for 1125 MHz CW signal at +5 dBm.

5. Set PRF/RF Switch (2) to ***PRF***.

6. Adjust INTL PRF/AM Control (41) until ***1000 Hz*** is shown on FREQUENCY Hz/MHz Digital Display (1).

7. Set PRF/RF Switch (2) to ***RF***.

8. Set Oscilloscope to trigger on Channel 2 and sweep speed to 10 ns/Div.

9. Verify pulse width is 50 ns (±5 ns). If not, perform Calibration Procedures according to 2-2-2, Table 1.

   NOTE: All pulse widths are measured from 50% amplitude on rising edge to 50% amplitude on falling edge. Refer to 2-2-2, Figure 8.

10. Set PULSE WIDTH µS Control (Range 1) (32) to ***.5***.

11. Set Oscilloscope sweep speed to 100 ns/Div.

12. Verify pulse width is 500 ns (±50 ns). If not, perform Calibration Procedures according to 2-2-2, Table 1.

13. Set PULSE WIDTH MULTIPLIER Control (RANGE 1) (34) to ***1***.

STEP PROCEDURE

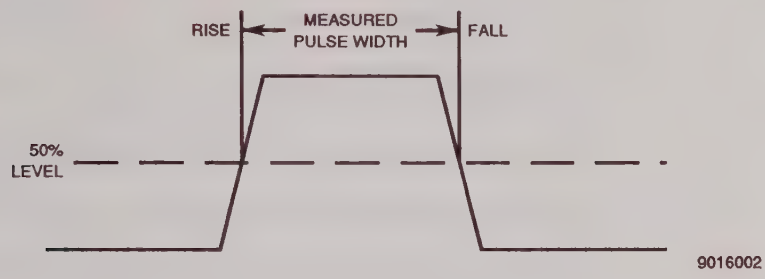

Pulse Width Measurement Points
Figure 8

14. Set Oscilloscope sweep speed to 1 µs/Div.

15. Verify pulse width is 5 µs (±0.5 µs). If not, perform Calibration Procedures according to 2-2-2, Table 1.

16. Set PULSE WIDTH MULTIPLIER Control (RANGE 1) (34) to ***10***.

17. Set Oscilloscope sweep speed to 10 µs/Div.

18. Verify pulse width is 50 µs (±5 µs). If not, perform Calibration Procedures according to 2-2-2, Table 1.

19. Set PULSE WIDTH MULTIPLIER Control (RANGE 1) (34) to ***100***.

20. Set PRF/RF Switch (2) to ***PRF***.

21. Adjust INTL PRF/AM Control (41) until ***500 Hz*** is shown on FREQUENCY Hz/MHz Digital Display (1).

22. Set PRF/RF Switch (2) to ***RF***.

23. Set Oscilloscope sweep speed to 100 µs/Div.

24. Verify pulse width is 500 µs (±50 µs). If not, perform Calibration Procedures according to 2-2-2, Table 1.

25. Set RD-301A as follows:

CONTROL		SETTING
(2)	PRF/RF Switch	***PRF***
(37)	RANGE 1 DELAY Thumbwheels	***000.3***
(38)	RANGE 2 DELAY Thumbwheels	***900.0***
(39)	RANGE SEL Switch	***R2 ON***

26. Adjust INTL PRF/AM Control (41) until ***1000 kHz*** is shown on FREQUENCY Hz/MHz Digital Display (1).

27. Set PRF/RF Switch (2) to ***RF***.

STEP	PROCEDURE

28. Set Oscilloscope sweep speed to 10 ns/Div.

29. Verify pulse width is 50 ns (±5 ns). If not, perform Calibration Procedures according to 2-2-2, Table 1.

30. Set PULSE WIDTH µS Control (RANGE 2) (31) to ***5***.

31. Set Oscilloscope sweep speed to 100 ns/Div.

32. Verify pulse width is 500 ns (±50 ns). If not, perform Calibration Procedures according to 2-2-2, Table 1.

33. Set PULSE WIDTH MULTIPLIER Control (RANGE 2) (35) to ***1***.

34. Set Oscilloscope sweep speed to 1 µs/Div.

35. Verify pulse width is 5 µs (±0.5 µs). If not, perform Calibration Procedures according to 2-2-2, Table 1.

36. Set PULSE WIDTH MULTIPLIER Control (RANGE 2) (35) to ***10***.

37. Set Oscilloscope sweep speed to 10 µs/Div.

38. Verify pulse width is 50 µs (±5 µs). If not, perform Calibration Procedures according to 2-2-2, Table 1.

39. Set PULSE WIDTH MULTIPLIER Control (RANGE 2) (35) to ***100***.

40. Set PRF/RF Switch (2) to ***PRF***.

41. Adjust INTL PRF/AM Control (41) until ***500 Hz*** is shown on FREQUENCY Hz/MHz Digital Display (1).

42. Set PRF/RF Switch (2) to ***RF***.

43. Set Oscilloscope sweep speed to 100 µs/Div.

44. Verify pulse width is 500 µs (±50 µs). If not, perform Calibration Procedures according to 2-2-2, Table 1.

45. Disconnect test equipment.

(e) RF ON/OFF Ratio

TEST EQUIPMENT: 1 Spectrum Analyzer

STEP PROCEDURE

1. Set RD-301A as follows:

CONTROL		SETTING
(2)	PRF/RF Switch	***RF***
(4)	OUTPUT LEVEL FINE dBm Control	***0***
(9)	OUTPUT LEVEL COARSE dBm Control	***-50***
(10)	MNL FREQ Controls	***9375.00 MHz***
(16)	RF/IF MODE Pushbutton Switches	***RF MNL***
(29)	MODULATION MODE Pushbutton Switches	***CW***
(39)	RANGE SEL Switch	***RINGS 1***

2. Apply power to RD-301A and allow for 30 minute stabilization period.

3. Use Serialized Coaxial Cable to connect Spectrum Analyzer to X-BAND I/O Connector (18).

4. Set Spectrum Analyzer as follows:

CONTROL	SETTING
Center Frequency	9375 MHz
Scan Width	5 MHz/Div
Amplitude Scale	10 dB/Div
Reference Level	-40 dBm

5. Center (ON) signal on Spectrum Analyzer display and record level.

6. Set MODULATION MODE Pushbutton Switches (29) to ***EXT (+)*** without applying external trigger.

7. Verify (OFF) signal level on Spectrum Analyzer is ≥70 dB less than level recorded in Step 5. Record level and difference.

8. Disconnect test equipment.

(2) IF Signal Generator

(a) Frequency and IF Counter

TEST EQUIPMENT: 1 Frequency Counter

STEP	PROCEDURE

1. Set RD-301A as follows:

CONTROL		SETTING
(4)	OUTPUT LEVEL FINE dBm Control	***0***
(9)	OUTPUT LEVEL COARSE dBm Control	***0***
(10)	MNL FREQ Controls	***fully ccw***
(16)	RF/IF MODE Pushbutton Switches	***IF HI***
(29)	MODULATION MODE Pushbutton Switches	***CW***

2. Apply power to RD-301A and allow for 30 minute stabilization period.
3. Connect Frequency Counter to IF OUT Connector (15).
4. Verify ≤20 MHz on Frequency Counter. Record reading.
5. Verify FREQUENCY Hz/MHz Digital Display (1) equals Frequency Counter reading from Step 4 (±2 kHz).
6. Adjust MNL FREQ Controls (10) ***fully cw***.
7. Verify ≥70 MHz on Frequency Counter. Record reading.
8. Verify FREQUENCY Hz/MHz Digital Display (1) equals Frequency Counter reading from Step 7 (±7 kHz).
9. If RD-301A fails any step, perform Calibration Procedures according to 2-2-2, Table 1.
10. Disconnect test equipment.

(b) Sweep Width

TEST EQUIPMENT: 1 Spectrum Analyzer

STEP PROCEDURE

1. Set RD-301A as follows:

CONTROL		SETTING
(4)	OUTPUT LEVEL FINE dBm Control	***0***
(9)	OUTPUT LEVEL COARSE dBm Control	***0***
(16)	RF/IF MODE Pushbutton Switches	***IF HI***
(29)	MODULATION MODE Pushbutton Switches	***CW***

2. Apply power to RD-301A and allow for 30 minute stabilization period.

3. Connect Spectrum Analyzer to IF OUT Connector (15).

4. Set Spectrum Analyzer as follows:

CONTROL	SETTING
Center Frequency	30 MHz
Scan Width	0.5 kHz/Div
Reference Level	+20 dBm
Sweep Speed	50 ms/Div

5. Adjust MNL FREQ Controls (10) for ***30 MHz*** on FREQUENCY Hz/MHz Digital Display (1).

6. Adjust SWEEP WIDTH MHz Control (33) ***cw***.

7. Verify carrier starts sweeping when SWEEP WIDTH MHz Control (33) passes ***0*** setting. If not, perform Calibration Procedures according to 2-2-2, Table 1.

8. Set SWEEP WIDTH MHz Control (33) to ***4***.

9. Verify carrier sweep is displayed across 8.0 divisions (4 MHz sweep width) on Spectrum Analyzer. If not, perform Calibration Procedures according to 2-2-2, Table 1.

10. Set SWEEP WIDTH MHz Control (33) to ***OFF***.

11. Disconnect test equipment.

(c) Marker Frequency

TEST EQUIPMENT: None

STEP	PROCEDURE

1. Set RD-301A as follows:

CONTROL		SETTING
(2)	PRF/RF Switch	***RF***
(4)	OUTPUT LEVEL FINE dBm Control	***0***
(9)	OUTPUT LEVEL COARSE dBm Control	***0***
(16)	RF/IF MODE Pushbutton Switches	***IF HI***
(19)	MKR FREQ Control	***fully ccw***
(29)	MODULATION MODE Pushbutton Switches	***CW***

2. Apply power to RD-301A and allow for 30 minute stabilization period.

3. Press DISPLAY MKR Switch (21) and verify ≤20 MHz on FREQUENCY Hz/MHz Digital Display (1). Record reading.

4. Adjust MKR FREQ Control (19) ***fully cw***.

5. Press DISPLAY MKR Switch (21) and verify ≥70 MHz on FREQUENCY Hz/MHz Digital Display (1). Record reading.

6. If RD-301A fails any step, perform Calibration Procedures according to 2-2-2, Table 1.

(d) Power

TEST EQUIPMENT: 1 Spectrum Analyzer

STEP PROCEDURE

1. Set RD-301A as follows:

CONTROL		SETTING
(4)	OUTPUT LEVEL FINE dBm Control	***0***
(9)	OUTPUT LEVEL COARSE dBm Control	***0***
(10)	MNL FREQ Controls	***30 MHz***
(16)	RF/IF MODE Pushbutton Switches	***IF HI***
(29)	MODULATION MODE Pushbutton Switches	***CW***

2. Apply power to RD-301A and allow for 30 minute stabilization period.

3. Connect Spectrum Analyzer to IF OUT Connector (15).

4. Set Spectrum Analyzer as follows:

CONTROL	SETTING
Center Frequency	30 MHz
Scan Width	5 MHz/Div
Amplitude Scale	2 dB/Div
Reference Level	-8 dBm

5. Adjust MNL FREQ Controls (10) for ***30 MHz*** on FREQUENCY Hz/MHz Digital Display (1).

6. Verify signal level is 0 dBm (±2.5 dB). If not, perform Calibration Procedures according to 2-2-2, Table 1.

7. Set Spectrum Analyzer reference level to +10 dBm.

8. Set OUTPUT LEVEL COARSE dBm Control (9) to ***+20***.

9. Verify signal level is +20 dBm (±2.7 dB). If not, perform Calibration Procedures according to 2-2-2, Table 1.

10. Set RF/IF MODE Pushbutton Switches (16) to ***IF LO***.

11. Set OUTPUT LEVEL COARSE dBm Control (9) to ***-120***.

12. Set OUTPUT LEVEL FINE dBm Control (4) to ***-10***.

13. Set Spectrum Analyzer reference level to -134 dBm.

14. Verify signal level is -130 dBm (±3.8 dB). If not, perform Calibration Procedures according to 2-2-2, Table 1.

15. Disconnect test equipment.

(e) Pulse Width

TEST EQUIPMENT: 1 Oscilloscope

STEP PROCEDURE

1. Set RD-301A as follows:

CONTROL		SETTING
(2)	PRF/RF Switch	***RF***
(4)	OUTPUT LEVEL FINE dBm Control	***0***
(9)	OUTPUT LEVEL COARSE dBm Control	***0***
(10)	MNL FREQ Controls	***30 MHz***
(16)	RF/IF MODE Pushbutton Switches	***IF HI***
(29)	MODULATION MODE Pushbutton Switches	***INTL***
(32)	PULSE WIDTH µS Control (RANGE 1)	***.5***
(34)	PULSE WIDTH MULTIPLIER Control (RANGE 1)	***1***
(36)	µS/NM Switch	***µS***
(39)	RANGE SEL Switch	***RINGS 1***
(42)	X1/X10 INTL PRF/AM Switch	***X10***

2. Apply power to RD-301A and allow for 30 minute stabilization period.

3. Connect Oscilloscope Channel 1 to IF OUT Connector (15) and Oscilloscope Trigger to DLYD SYNC Connector (24).

4. Set PRF/RF Switch (2) to ***PRF***.

5. Adjust INTL PRF/AM Control (41) until ***1000 Hz*** is shown on FREQUENCY Hz/MHz Digital Display (1).

6. Set Oscilloscope sweep speed to 100 ns/Div.

7. Verify pulse width is 500 ns (±50 ns). If not, perform Calibration Procedures according to 2-2-2, Table 1.

   NOTE: All pulse widths are measured from 50% amplitude on rising edge to 50% amplitude on falling edge. Refer to 2-2-2, Figure 8.

8. Set PULSE WIDTH µS Control (RANGE 1) (32) to ***5***.

9. Set PULSE WIDTH MULTIPLIER Control (RANGE 1) (34) to ***100***.

10. Adjust INTL PRF/AM Control (41) until ***500 Hz*** is shown on FREQUENCY Hz/MHz Digital Display (1).

11. Set Oscilloscope sweep speed to 100 µs/Div.

12. Verify pulse width is 500 µs (±50 µs). If not, perform Calibration Procedures according to 2-2-2, Table 1.

13. Disconnect test equipment.

(f) IF ON/OFF Ratio

TEST EQUIPMENT: 1 Spectrum Analyzer

STEP PROCEDURE

1. Set RD-301A as follows:

CONTROL		SETTING
(2)	PRF/RF Switch	***RF***
(4)	OUTPUT LEVEL FINE dBm Control	***0***
(9)	OUTPUT LEVEL COARSE dBm Control	***+20***
(10)	MNL FREQ Controls	***30 MHz***
(16)	RF/IF MODE Pushbutton Switches	***IF HI***
(29)	MODULATION MODE Pushbutton Switches	***CW***

2. Apply power to RD-301A and allow for 30 minute stabilization period.

3. Connect Spectrum Analyzer to IF OUT Connector (15).

4. Set Spectrum Analyzer as follows:

CONTROL	SETTING
Center Frequency	30 MHz
Scan Width	5 MHz/Div
Amplitude Scale	10 dB/Div
Reference Level	+25 dBm

5. Center (ON) signal on Spectrum Analyzer display and record level.

6. Set MODULATION MODE Pushbutton Switches (29) to ***EXT (+)*** without applying external trigger.

7. Verify (OFF) signal level on Spectrum Analyzer is ≥48 dB less than level recorded in Step 5. Record level and difference.

8. Set MODULATION MODE Pushbutton Switches (29) to ***CW***.

9. Set MNL FREQ Controls (10) for ***60 MHz*** according to FREQUENCY Hz/MHz Digital Display (1).

10. Set Spectrum Analyzer center frequency to 60 MHz.

11. Center (ON) signal on Spectrum Analyzer display and record level.

12. Set MODULATION MODE Pushbutton Switches (29) to ***EXT (+)*** without applying external trigger.

13. Verify (OFF) signal level on Spectrum Analyzer is ≥48 dB less than level recorded in Step 11. Record level and difference.

14. Disconnect test equipment.

(3) INTL Modulation/PRF Counter

TEST EQUIPMENT: 1 Frequency Counter

STEP	PROCEDURE

1. Set RD-301A as follows:

CONTROL		SETTING
(2)	PRF/RF Switch	***PRF***
(29)	MODULATION MODE Pushbutton Switches	***INTL***
(42)	X1/X10 INTL PRF/AM Switch	***X1***

2. Apply power to RD-301A and allow for 30 minute stabilization period.
3. Connect Frequency Counter to SYNC Connector (26).
4. Adjust INTL PRF/AM Control (41) for 50 Hz sync pulse frequency on Frequency Counter.
5. Verify INTL PRF/AM Control (41) setting is within marked area for ***50 Hz***. If not, perform Calibration Procedures according to 2-2-2, Table 1.
6. Verify FREQUENCY Hz/MHz Digital Display (1) reads ***50 Hz*** (±1 Hz). If not, perform Calibration Procedures according to 2-2-2, Table 1.
7. Adjust INTL PRF/AM Control (41) for 500 Hz sync pulse frequency on Frequency Counter.
8. Verify INTL PRF/AM Control (41) setting is within marked area for ***500 Hz***. If not, perform Calibration Procedures according to 2-2-2, Table 1.
9. Verify FREQUENCY Hz/MHz Digital Display (1) reads ***500 Hz*** (±1 Hz). If not, perform Calibration Procedures according to 2-2-2, Table 1.
10. Set X1/X10 INTL PRF/AM Switch (42) to ***X10***.
11. Adjust INTL PRF/AM Control (41) for 500 Hz sync pulse frequency on Frequency Counter.
12. Verify INTL PRF/AM Control (41) setting is within marked area for ***50 Hz***. If not, perform Calibration Procedures according to 2-2-2, Table 1.
13. Verify FREQUENCY Hz/MHz Digital Display (1) reads ***500 Hz*** (±1 Hz). If not, perform Calibration Procedures according to 2-2-2, Table 1.
14. Verify frequencies in Steps 9 and 10 overlap frequencies in Steps 12 and 13. If not, perform Calibration Procedures according to 2-2-2, Table 1.
15. Adjust INTL PRF/AM Control (41) for 5000 Hz sync pulse frequency on Frequency Counter.

STEP	PROCEDURE

16. Verify INTL PRF/AM Control (41) setting is within marked area for ***500 Hz***. If not, perform Calibration Procedures according to 2-2-2, Table 1.

17. Verify FREQUENCY Hz/MHz Digital Display (1) reads ***5000 Hz*** (±2 Hz). If not, perform Calibration Procedures according to 2-2-2, Table 1.

18. Disconnect test equipment.

(4) Range

TEST EQUIPMENT:
1 Pulse Generator
1 Oscilloscope
1 X-Band to L-Band Down Converter
(Refer to Appendix D.)
1 L-Band Signal Generator

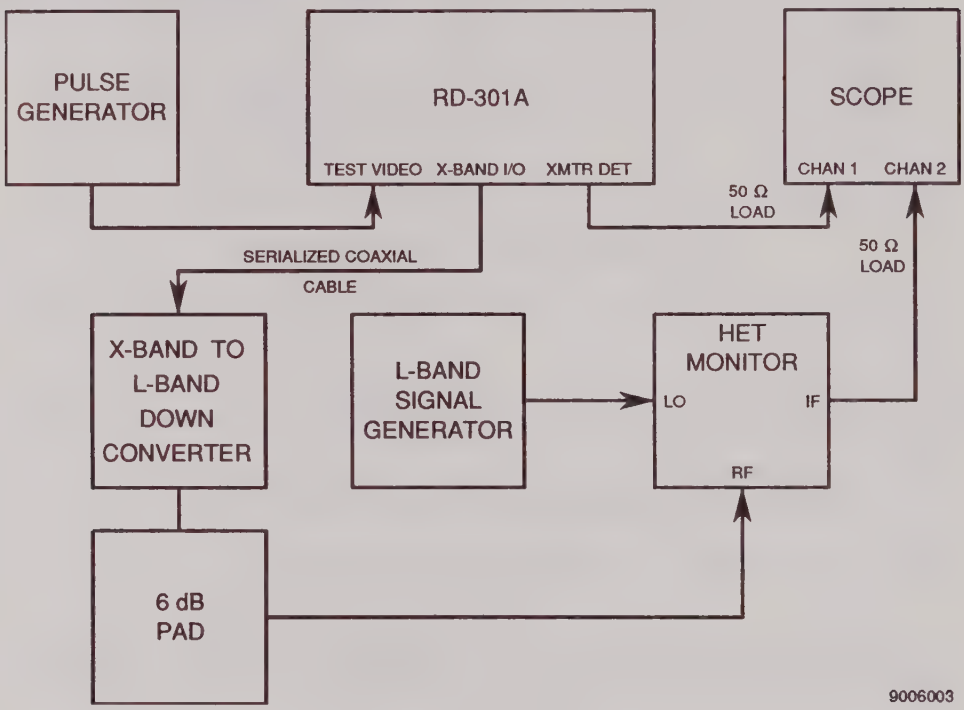

Range Delay Verification Setup
Figure 9

STEP	PROCEDURE

1. Set RD-301A as follows:

CONTROL		SETTING
(2)	PRF/RF Switches	***RF***
(10)	MNL FREQ Controls	***9375.0 MHz***
(16)	RF/IF MODE Pushbutton Switches	***RF MNL***
(29)	MODULATION MODE Pushbutton Switches	***TRACK***
(31)	PULSE WIDTH µS Control (RANGE 2)	***5***
(32)	PULSE WIDTH µS Control (RANGE 1)	***5***
(34)	PULSE WIDTH MULTIPLIER Control (RANGE 1)	***1***
(35)	PULSE WIDTH MULTIPLIER Control (RANGE 2)	***1***
(36)	µS/NM Switch	***µS***
(37)	RANGE 1 DELAY Thumbwheels	***000.0***
(38)	RANGE 2 DELAY Thumbwheels	***000.0***
(39)	RANGE SEL Switch	***RINGS 1***

STEP PROCEDURE

2. Apply power to RD-301A and allow for 30 minute stabilization period.

3. Connect test equipment as shown in 2-2-2, Figure 9.

4. Set Pulse Generator for 3 µs pulse at TTL level and 1 kHz PRF.

5. Set L-Band Signal Generator for 1125 MHz CW signal at +7 dBm.

   NOTE: Keep RD-301A and L-Band Signal Generator near same L-Band frequency (zero-beat) for minimum distortion.

6. Set Oscilloscope to display both channels.

   NOTE: Insure both Oscilloscope channel delays are calibrated to match.

   RANGE 1

7. Verify residual delay is 0.1 µs (±0.1 µs). Record Range 1 residual delay.

   NOTE: Measure range and residual delays from leading edge of XMTR DET Connector (13) transmitter pulse to leading edge of X-Band I/O Connector (18) reply pulse at 50% amplitude points.

   NOTE: Refer to Appendix D. Subtract fixed delay through X-Band to L-Band Down Converter from RD-301A range delay measurement to obtain actual range delay.

8. Set RANGE 1 DELAY Thumbwheels (37) to ***000.1***.

9. Verify range delay is 0.1 µs + residual delay from Step 7.

10. Set µS/NM Switch (36) to ***NM***.

11. Verify range delay is 1.236 µs + residual delay from Step 7.

12. Set µS/NM Switch (36) to ***µS***.

13. Set RANGE 1 DELAY Thumbwheels (37) to ***100.0***.

14. Verify range delay is 100 µs + residual delay from Step 7 (±10 ns).

STEP PROCEDURE

15. Set RANGE SEL Switch (39) according to 2-2-2, Table 3 and verify results (leading edge to leading edge at 50% amplitude points).

SETTING	RESULT
RINGS 2	Two reply pulses are present. Ring 2 reply pulse occurs 100 µs (±10 ns) after Ring 1 reply pulse.
RINGS 3	Three reply pulses are present. Ring 3 reply pulse occurs 100 µs (±10 ns) after Ring 2 reply pulse.
RINGS 4	Four reply pulses are present. Ring 4 reply pulse occurs 100 µs (±10 ns) after Ring 3 reply pulse.
RINGS 5	Five reply pulses are present. Ring 5 reply pulse occurs 100 µs (±10 ns) after Ring 4 reply pulse.

Range Reply Rings Verification
Table 3

16. Set RANGE SEL Switch (39) to ***RINGS 1***.

17. Set RANGE 1 DELAY Thumbwheels (37) to ***999.9***.

18. Adjust Oscilloscope and use Δ time to verify range delay is 999.9 µs + residual delay from Step 7 (±0.1 µs).

19. Set µS/NM Switch (36) to ***NM***.

20. Verify range delay is 12.358 ms + residual delay from Step 7 (±1.2 µs).

RANGE 2

21. Reset RD-301A as follows:

CONTROL	SETTING
(36) µS/NM Switch	***µS***
(37) RANGE 1 DELAY Thumbwheels	***100.0***
(39) RANGE SEL Control	***R2 ON***

22. Verify residual delay is 0.4 µs (±0.1 µs). Record Range 2 residual delay. If not, perform calibration procedures according to 2-2-2, Table 1.

23. Set RANGE 2 DELAY Thumbwheels (38) to ***000.1***.

24. Verify range delay is 0.1 µs + residual delay from Step 22. If not, perform calibration procedures according to 2-2-2, Table 1.

25. Set µS/NM Switch (36) to ***NM***.

STEP	PROCEDURE

26. Verify range delay is 1.236 µs + residual delay from Step 22. If not, perform calibration procedures according to 2-2-2, Table 1.

27. Set µS/NM Switch (36) to ***µS***.

28. Set RANGE 2 DELAY Thumbwheels (38) to ***999.9***.

29. Adjust Oscilloscope and use Δ time to verify range delay to Range 2 reply pulse is 999.9 µs + residual delay from Step 22 (±0.1 µs). If not, perform calibration procedures according to 2-2-2, Table 1.

30. Set µS/NM Switch (36) to ***NM***.

31. Verify range delay to Range 2 reply pulse is 12.358 ms + residual delay from Step 22 (±1.2 µs). If not, perform calibration procedures according to 2-2-2, Table 1.

32. Disconnect test equipment.

(5) Power Meter

TEST EQUIPMENT:
1 Bandpass Filter
1 Power Meter Assembly (Refer to Appendix D.)
1 TWT Amplifier
1 X-Band Signal Generator

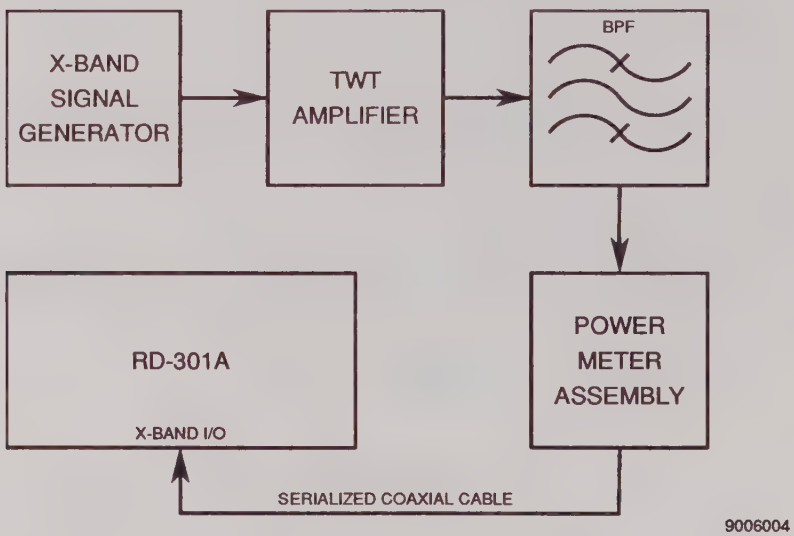

Power Meter Verification Setup
Figure 10

STEP	PROCEDURE

1. Apply power to RD-301A and allow for 30 minute stabilization period.
2. Set TWT Amplifier power On and in Standby mode.
3. Connect test equipment as shown in 2-2-2, Figure 10.
4. Set X-Band Signal Generator as follows:

CONTROL	SETTING
Frequency	9375 MHz
Pulse Width	3 µs
PRF	1 kHz

5. Set METER SELECT Switch (47) to ***PK POWER***.
6. Record coupling value of Waveguide Coupler used with RD-301A.

   NOTE: The coupling value is marked (not tagged value) on Waveguide Coupler.

7. Record 1 kW and 12 kW Test RF Levels from 2-2-2, Table 4 according to Waveguide Coupler Value from Step 6.

Waveguide Coupler Value	1 kW Test RF Level	12 kW Test RF Level
19.0 dB	12.589 W	151.071 W
19.1 dB	12.303 W	147.632 W
19.2 dB	12.023 W	144.272 W
19.3 dB	11.749 W	140.988 W
19.4 dB	11.482 W	137.778 W
19.5 dB	11.220 W	134.642 W
19.6 dB	10.965 W	131.577 W
19.7 dB	10.715 W	128.582 W
19.8 dB	10.471 W	125.655 W
19.9 dB	10.233 W	122.795 W
20.0 dB	10.000 W	120.000 W
20.1 dB	9.772 W	117.268 W
20.2 dB	9.550 W	114.599 W
20.3 dB	9.333 W	111.991 W
20.4 dB	9.120 W	109.441 W
20.5 dB	8.913 W	106.950 W
20.6 dB	8.710 W	104.516 W
20.7 dB	8.511 W	102.137 W
20.8 dB	8.318 W	99.812 W
20.9 dB	8.128 W	97.540 W
21.0 dB	7.943 W	95.319 W

Test RF Levels for Power Meter Verification
Table 4

CAUTION: CONNECTIONS TO TWT AMPLIFIER MUST BE CORRECT BEFORE SWITCHING TO OPERATE MODE.

8. Set TWT Amplifier to Operate mode.

9. Adjust X-Band Signal Generator level until Power Meter Assembly indicates characterized value for 1 kW Test RF Level from Step 7.

10. Verify PANEL Meter (43) indicates ***1 kW*** (±148 W). If not, perform Calibration Procedures according to 2-2-2, Table 1.

11. Adjust X-Band Signal Generator level until Power Meter Assembly indicates characterized value for 12 kW Test RF Level from Step 7.

STEP PROCEDURE

12. Verify PANEL Meter (43) indicates ***12 kW*** (±1776 W). If not, perform Calibration Procedures according to 2-2-2, Table 1.

13. Slowly decrease TWT Amplifier power and set to Standby mode for ≥15 minutes.

14. Disconnect test equipment.

(6) XMTR DSCRM .1V/MHz Connector

TEST EQUIPMENT: 1 Oscilloscope
1 TWT Amplifier
1 X-Band Signal Generator

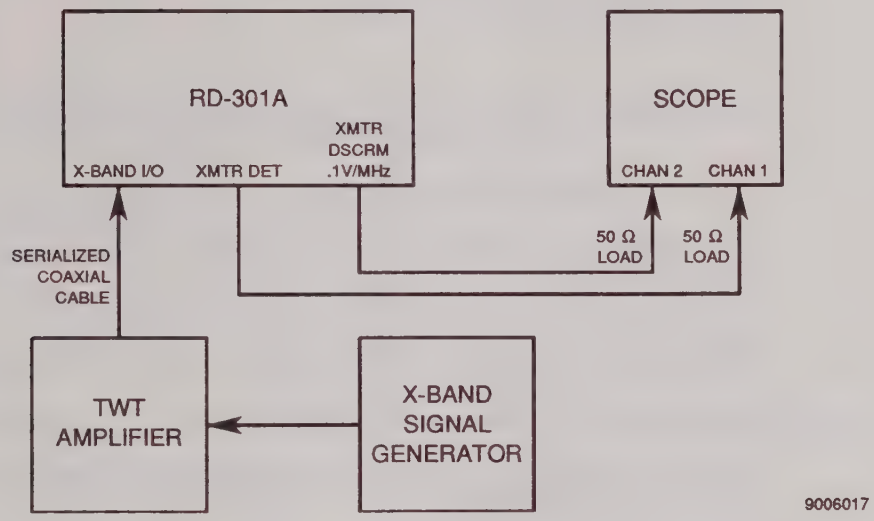

XMTR DSCRM .1V/MHz Connector Verification Setup
Figure 11

STEP PROCEDURE

1. Set RD-301A as follows:

CONTROL		SETTING
(2)	PRF/RF Switch	***RF***
(4)	OUTPUT LEVEL FINE dBm Control	***0***
(9)	OUTPUT LEVEL COARSE dBm Control	***-50***
(16)	RF/IF MODE Pushbutton Switches	***RF MNL***
(29)	MODULATION MODE Pushbutton Switches	***TRACK***

2. Apply power to RD-301A and allow for 30 minute stabilization period.

3. Connect test equipment as shown in 2-2-2, Figure 11.

4. Set TWT Amplifier power On and in Standby mode.

5. Set Oscilloscope with both channels dc coupled as follows:

CONTROL	SETTING
Sweep Speed	500 ns/Div
Amplitude Scale (Channel 1)	50 mV/Div
Amplitude Scale (Channel 2)	10 mV/Div
Trigger	Channel 1

STEP PROCEDURE

6. Set X-Band Signal Generator as follows:

CONTROL	SETTING
Frequency	9400 MHz
Pulse Width	5 µs
PRF	500 Hz

CAUTION: CONNECTIONS TO TWT AMPLIFIER MUST BE CORRECT BEFORE SWITCHING TO OPERATE MODE.

7. Set TWT Amplifier to Operate mode.

8. Set X-Band Signal Generator output level for PANEL Meter (43) reading of ***.5 kW***.

9. Adjust MNL FREQ Controls (10) to align XMTR DSCRM .1V/MHz Connector (12) pulses with XMTR DET Connector (13) pulses.

10. Record FREQUENCY Hz/MHz Digital Display (1) readout as reference.

11. Set Oscilloscope to display only Channel 2 and center pulse level on first horizontal graticule below top of screen.

12. Adjust MNL FREQ Controls (10) for Step 10 reference - 0.5 MHz as shown on FREQUENCY Hz/MHz Digital Display (1).

13. Verify pulse level on Oscilloscope decreases 50 mV (±5 mV).

14. Adjust MNL FREQ Controls (10) for Step 10 reference.

15. Set Oscilloscope to center pulse level on second horizontal graticule above bottom of screen.

16. Adjust MNL FREQ Controls (10) for Step 10 reference + 0.5 MHz as shown on FREQUENCY Hz/MHz Digital Display (1).

17. Verify pulse level on Oscilloscope increases 50 mV (±5 mV).

18. Slowly decrease TWT Amplifier power and set to Standby mode for ≥15 minutes.

19. Disconnect test equipment.

(7) Inputs

(a) AM EXT INPUT Connector

TEST EQUIPMENT: 1 Function Generator
1 Modulation Meter
1 X-Band to L-Band Down Converter
(Refer to Appendix D.)

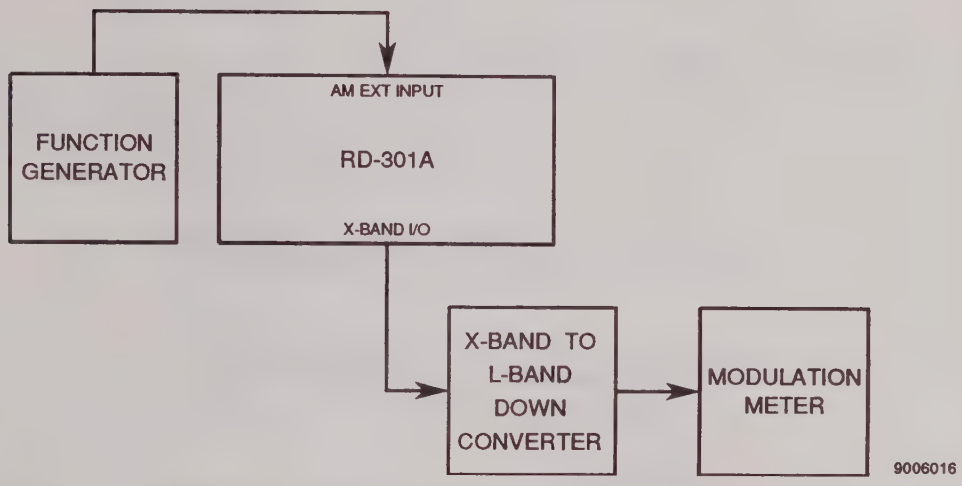

AM EXT INPUT Connector Setup Diagram
Figure 12

STEP	PROCEDURE

1. Apply power to RD-301A and allow for 30 minute stabilization period.

2. Set RD-301A as follows:

CONTROL		SETTING
(2)	PRF/RF Switch	***RF***
(4)	OUTPUT LEVEL FINE dBm Control	***0***
(9)	OUTPUT LEVEL COARSE dBm Control	***-50***
(10)	MNL FREQ Controls	***9375 MHz***
(16)	RF/IF MODE Pushbutton Switches	***RF MNL***
(29)	MODULATION MODE Pushbutton Switches	***CW***

3. Connect test equipment as shown in 2-2-2, Figure 12.

4. Set Function Generator for 1 kHz sine wave at 3 V_{P-P}.

5. Verify 30% (±2%) modulation on Modulation Meter. If not, perform Calibration Procedures according to 2-2-2, Table 1.

6. Disconnect test equipment.

(b) EXT TRIG Connector

TEST EQUIPMENT: 1 Oscilloscope
1 Pulse Generator

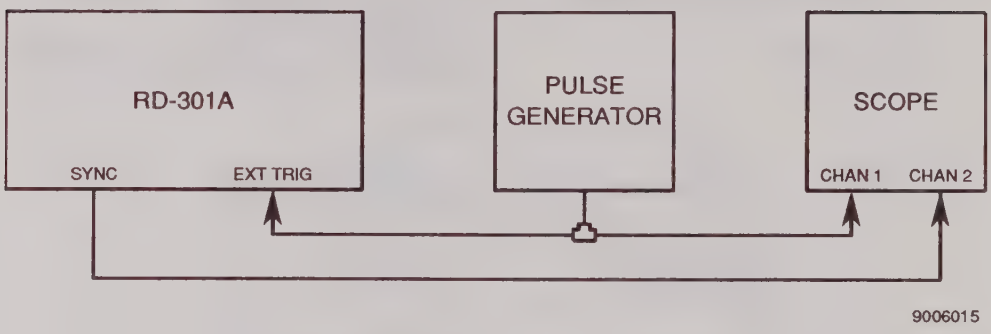

External Trigger Verification Setup
Figure 13

STEP	PROCEDURE

1. Set RD-301A as follows:

CONTROL		SETTING
(2)	PRF/RF Switch	***PRF***
(29)	MODULATION MODE Pushbutton Switches	***EXT (+)***
(36)	µS/NM Switch	***µS***
(37)	RANGE 1 DELAY Thumbwheels	***000.3***
(39)	RANGE SEL Switch	***RINGS 1***

2. Apply power to RD-301A and allow for 30 minute stabilization period.
3. Set Oscilloscope to trigger on positive edge of Channel 1 input.
3. Set Pulse Generator for 1 µs wide positive pulse, 2 V_{P-P} at 1 kHz.
4. Adjust output level of Pulse Generator and verify sync pulse appears.
5. Set MODULATION MODE Pushbutton Switches (29) to ***EXT (-)***.
6. Set Pulse Generator for 1 µs wide negative pulse, 2 V_{P-P} at 1 kHz.
7. Set Oscilloscope to trigger on negative edge of Channel 1 input.
8. Adjust output level of Pulse Generator and verify sync pulse appears.
9. Disconnect test equipment.

G. Verification Data Sheet

TECHNICIAN: _____ DATE: _____

RD-301A S/N: _____

STEP	DATA	RESULT
(1)	RF Signal Generator	
(a)	Frequency and RF Counter	
4.	Frequency ≤9295 MHz	_____
5.	FREQUENCY Hz/MHz Digital Display (1) readout equals Step 4 reading (±250 kHz).	_____
7.	Frequency ≥9500 MHz	_____
8.	FREQUENCY Hz/MHz Digital Display (1) readout equals Step 7 reading (±250 kHz).	_____
(b)	Tracking and ΔF Offset	
	TRACKING	
11.	Frequency Difference (30 µs wide pulse)	
	(9295 MHz at .1 kW) ≤25 kHz	_____
	(9400 MHz at .1 kW) ≤25 kHz	_____
	(9500 MHz at .1 kW) ≤25 kHz	_____
	(9295 MHz at 12 kW) ≤25 kHz	_____
	(9400 MHz at 12 kW) ≤25 kHz	_____
	(9500 MHz at 12 kW) ≤25 kHz	_____
12.	XMTR HET MON Connector (11) output	
	(9295 MHz at .1 kW)	_____ (√)
	(9400 MHz at .1 kW)	_____ (√)
	(9500 MHz at .1 kW)	_____ (√)
	(9295 MHz at 12 kW)	_____ (√)
	(9400 MHz at 12 kW)	_____ (√)
	(9500 MHz at 12 kW)	_____ (√)
14.	Frequency Difference (2 µs wide pulse)	
	(9295 MHz at .1 kW) ≤25 kHz	_____
	(9400 MHz at .1 kW) ≤25 kHz	_____
	(9500 MHz at .1 kW) ≤25 kHz	_____
	(9295 MHz at 12 kW) ≤25 kHz	_____
	(9400 MHz at 12 kW) ≤25 kHz	_____
	(9500 MHz at 12 kW) ≤25 kHz	_____

STEP	DATA	RESULT
15.	XMTR HET MON Connector (11) output	
	(9295 MHz at .1 kW)	_____(√)
	(9400 MHz at .1 kW)	_____(√)
	(9500 MHz at .1 kW)	_____(√)
	(9295 MHz at 12 kW)	_____(√)
	(9400 MHz at 12 kW)	_____(√)
	(9500 MHz at 12 kW)	_____(√)
18.	Frequency Difference (0.5 µs wide pulse)	
	(9295 MHz at .1 kW) ≤60 kHz	_____
	(9400 MHz at .1 kW) ≤60 kHz	_____
	(9500 MHz at .1 kW) ≤60 kHz	_____
	(9295 MHz at 12 kW) ≤60 kHz	_____
	(9400 MHz at 12 kW) ≤60 kHz	_____
	(9500 MHz at 12 kW) ≤60 kHz	_____
19.	XMTR HET MON Connector (11) output	
	(9295 MHz at .1 kW)	_____(√)
	(9400 MHz at .1 kW)	_____(√)
	(9500 MHz at .1 kW)	_____(√)
	(9295 MHz at 12 kW)	_____(√)
	(9400 MHz at 12 kW)	_____(√)
	(9500 MHz at 12 kW)	_____(√)
22.	Frequency Difference (0.1 µs wide pulse)	
	(9295 MHz at .1 kW) ≤600 kHz	_____
	(9400 MHz at .1 kW) ≤600 kHz	_____
	(9500 MHz at .1 kW) ≤600 kHz	_____
	(9295 MHz at 12 kW) ≤600 kHz	_____
	(9400 MHz at 12 kW) ≤600 kHz	_____
	(9500 MHz at 12 kW) ≤600 kHz	_____
23.	XMTR HET MON Connector (11) output	
	(9295 MHz at .1 kW)	_____(√)
	(9400 MHz at .1 kW)	_____(√)
	(9500 MHz at .1 kW)	_____(√)
	(9295 MHz at 12 kW)	_____(√)
	(9400 MHz at 12 kW)	_____(√)
	(9500 MHz at 12 kW)	_____(√)

STEP	DATA	RESULT
26.	Frequency Difference (0.05 µs wide pulse)	
	(9295 MHz at .1 kW) ≤2 MHz	_____
	(9400 MHz at .1 kW) ≤2 MHz	_____
	(9500 MHz at .1 kW) ≤2 MHz	_____
	(9295 MHz at 12 kW) ≤2 MHz	_____
	(9400 MHz at 12 kW) ≤2 MHz	_____
	(9500 MHz at 12 kW) ≤2 MHz	_____
27.	XMTR HET MON Connector (11) output	
	(9295 MHz at .1 kW)	_____ (√)
	(9400 MHz at .1 kW)	_____ (√)
	(9500 MHz at .1 kW)	_____ (√)
	(9295 MHz at 12 kW)	_____ (√)
	(9400 MHz at 12 kW)	_____ (√)
	(9500 MHz at 12 kW)	_____ (√)
TRACK MODULATION PRF		
45.	50 Hz PRF/9295 MHz 49 to 51 Hz	_____
	50 Hz PRF/9400 MHz 49 to 51 Hz	_____
	50 Hz PRF/9500 MHz 49 to 51 Hz	_____
46.	50 Hz PRF/9295 MHz Frequency difference ≤25 kHz	_____
	50 Hz PRF/9400 MHz Frequency difference ≤25 kHz	_____
	50 Hz PRF/9500 MHz Frequency difference ≤25 kHz	_____
47.	XMTR HET MON Connector (11) output	
	(50 Hz PRF/9500 MHz)	_____ (√)
	(50 Hz PRF/9500 MHz)	_____ (√)
	(50 Hz PRF/9500 MHz)	_____ (√)
49.	2 kHz PRF/9295 MHz 1999 to 2001 Hz	_____
	2 kHz PRF/9400 MHz 1999 to 2001 Hz	_____
	2 kHz PRF/9500 MHz 1999 to 2001 Hz	_____
50.	2 kHz PRF/9295 MHz Frequency difference ≤25 kHz	_____
	2 kHz PRF/9400 MHz Frequency difference ≤25 kHz	_____
	2 kHz PRF/9500 MHz Frequency difference ≤25 kHz	_____

STEP	DATA	RESULT
51.	XMTR HET MON Connector (11) output (2 kHz PRF/9500 MHz)	_____(√)
	(2 kHz PRF/9500 MHz)	_____(√)
	(2 kHz PRF/9500 MHz)	_____(√)
53.	20 kHz PRF/9295 MHz Frequency difference ≤25 kHz	_____
	20 kHz PRF/9400 MHz Frequency difference ≤25 kHz	_____
	20 kHz PRF/9500 MHz Frequency difference ≤25 kHz	_____
54.	XMTR HET MON Connector (11) output (20 kHz PRF/9500 MHz)	_____(√)
	(20 kHz PRF/9500 MHz)	_____(√)
	(20 kHz PRF/9500 MHz)	_____(√)
ΔF OFFSET		
63.	9400 MHz Frequency Counter reading	_____
66.	Offset -.75 MHz Step 63 - 750 kHz (±95 kHz)	_____
67.	XMTR HET MON Connector (11) output	_____(√)
69.	Offset +.75 MHz Step 63 + 750 kHz (±95 kHz)	_____
70.	XMTR HET MON Connector (11) output	_____(√)
(c) Output Power and Internal AM Amplitude		
8.	Level difference between ***1*** dBm position and reference (≤0.5 dB)	_____
	2 dBm position and reference (≤0.5 dB)	_____
	3 dBm position and reference (≤0.5 dB)	_____
	4 dBm position and reference (≤0.5 dB)	_____
	5 dBm position and reference (≤0.5 dB)	_____
	6 dBm position and reference (≤0.5 dB)	_____
	7 dBm position and reference (≤0.5 dB)	_____
	8 dBm position and reference (≤0.5 dB)	_____
	9 dBm position and reference (≤0.5 dB)	_____
	10 dBm position and reference (≤0.5 dB)	_____
10.	Level difference between ***-60*** dBm position and reference (≤2 dB)	_____
	-70 dBm position and reference (≤2 dB)	_____
	-80 dBm position and reference (≤2 dB)	_____
	-90 dBm position and reference (≤2 dB)	_____
	-100 dBm position and reference (≤2 dB)	_____

STEP	DATA	POSITION
12.	Level difference between *-110* dBm position and reference (≤2 dB)	
14.	Level difference between *-120* dBm position and reference (≤2 dB)	
	CONTOUR BOOST and INTERNAL AM UP MODULATION	
18.	Level difference between *-80* dBm position and reference (≤1 dB)	
19.	Level difference between *01* position and reference (≤0.5 dB)	
	02 position and reference (≤0.5 dB)	
	03 position and reference (≤0.5 dB)	
	04 position and reference (≤0.5 dB)	
	05 position and reference (≤0.5 dB)	
	06 position and reference (≤0.5 dB)	
	07 position and reference (≤0.5 dB)	
	08 position and reference (≤0.5 dB)	
	09 position and reference (≤0.5 dB)	
20.	Level difference between *10* position and reference (≤1 dB)	
22.	Level difference between *20* position and reference (≤1 dB)	
	RANGE 2 ATTENUATION and INTERNAL AM DOWN MODULATION	
25.	Level difference between *-80* dBm position and reference (≤1.5 dB)	
26.	Level difference between *01* position and reference (≤1.5 dB)	
	02 position and reference (≤1.5 dB)	
	03 position and reference (≤1.5 dB)	
	04 position and reference (≤1.5 dB)	
	05 position and reference (≤1.5 dB)	
	06 position and reference (≤1.5 dB)	
	07 position and reference (≤1.5 dB)	
	08 position and reference (≤1.5 dB)	
	09 position and reference (≤1.5 dB)	

STEP	DATA	POSITION
27.	Level difference between ***19*** position and reference (≤0.5 dB)	_____
	29 position and reference (≤0.5 dB)	_____
	39 position and reference (≤0.5 dB)	_____
	49 position and reference (≤0.5 dB)	_____
	59 position and reference (≤0.5 dB)	_____
(d) Pulse Width		
9.	Range 1 pulse 50 ns (45 to 55 ns)	_____
12.	Range 1 pulse 500 ns (450 to 550 ns)	_____
15.	Range 1 pulse 5 µs (4.5 to 5.5 µs)	_____
18.	Range 1 pulse 50 µs (45 to 55 µs)	_____
24.	Range 1 pulse 500 µs (450 to 550 µs)	_____
29.	Range 2 pulse 50 ns (45 to 55 ns)	_____
32.	Range 2 pulse 500 ns (450 to 550 ns)	_____
35.	Range 2 pulse 5 µs (4.5 to 5.5 µs)	_____
38.	Range 2 pulse 50 µs (45 to 55 µs)	_____
44.	Range 2 pulse 500 µs (450 to 550 µs)	_____
(e) RF ON/OFF Ratio		
5.	ON signal level	_____
7.	OFF signal level	_____
	OFF signal level ≥70 dB below ON signal level	_____
(2) IF Signal Generator		
(a) Frequency and IF Counter		
4.	Frequency ≤20 MHz	_____
5.	FREQUENCY Hz/MHz Digital Display (1) readout equals Step 4 reading (±2 kHz).	_____
7.	Frequency ≥70 MHz	_____
8.	FREQUENCY Hz/MHz Digital Display (1) readout equals Step 7 reading (±7 kHz).	_____
(b) Sweep Width		
7.	Carrier starts sweeping past ***0*** setting.	_____(√)
9.	4 MHz sweep width	_____(√)
(c) Marker Frequency		
3.	FREQUENCY Hz/MHz Digital Display (1) readout ≤20 MHz	_____
5.	FREQUENCY Hz/MHz Digital Display (1) readout ≥70 MHz	_____

STEP	DATA	RESULT
(d) Power		
6.	Signal level 0 dBm (-2.5 to +2.5 dBm)	_____
9.	Signal level +20 dBm (+17.3 to +22.7 dBm)	_____
14.	Signal level -130 dBm (-133.8 to -126.2 dBm)	_____
(e) Pulse Width		
7.	500 ns (450 to 550 ns)	_____
12.	500 µs (450 to 550 µs)	_____
(f) IF ON/OFF Ratio		
5.	30 MHz ON signal level	_____
7.	30 MHz OFF signal level	_____
	OFF signal level ≥48 dB below ON signal level	_____
11.	60 MHz ON signal level	_____
13.	60 MHz OFF signal level	_____
	OFF signal level ≥48 dB below ON signal level	_____
(3) INTL Modulation/PRF Counter		
5.	INTL PRF/AM Control (41) is set to ***50*** Hz.	_____ (√)
6.	FREQUENCY Hz/MHz Digital Display (1) readout ***50 Hz*** (49 to 51 Hz)	_____
8.	INTL PRF/AM Control (41) is set to ***500 Hz***.	_____ (√)
9.	FREQUENCY Hz/MHz Digital Display (1) readout ***500*** Hz (499 to 501 Hz)	_____
12.	INTL PRF/AM Control (41) is set to ***50 Hz***.	_____ (√)
13.	FREQUENCY Hz/MHz Digital Display (1) readout ***500 Hz*** (499 to 501 Hz)	_____
14.	Frequencies in Steps 9 and 10 overlap frequencies in Steps 12 and 13.	_____ (√)
16.	INTL PRF/AM Control (41) is set to ***500 Hz***.	_____ (√)
17.	FREQUENCY Hz/MHz Digital Display (1) readout ***5000 Hz*** (4998 to 5002 Hz)	_____

STEP	DATA	RESULT
(4) Range		
	RANGE 1	
7.	Residual delay 0.1 µs (0.0 to 0.2 µs)	_____
9.	Delay 0.1 µs + Step 7 residual delay	_____(√)
11.	Delay 1.236 µs + Step 7 residual delay	_____(√)
14.	Delay 100 µs + Step 7 residual delay (±10 ns)	_____
15.	Ring 1 reply pulse to Ring 2 reply pulse 100 µs (99.99 to 100.09 µs)	_____
	Ring 2 reply pulse to Ring 3 reply pulse 100 µs (99.99 to 100.09 µs)	_____
	Ring 3 reply pulse to Ring 4 reply pulse 100 µs (99.99 to 100.09 µs)	_____
	Ring 4 reply pulse to Ring 5 reply pulse 100 µs (99.99 to 100.09 µs)	_____
18.	Delay 999.9 µs + Step 7 residual delay (±0.1 µs)	_____
20.	Delay 12.358 ms + Step 7 residual delay (±1.2 µs)	_____
	RANGE 2	
22.	Residual delay 0.4 µs (0.3 to 0.5 µs)	_____
24.	Delay 0.1 µs + Step 22 residual delay	_____(√)
26.	Delay 1.236 µs + Step 22 residual delay	_____(√)
29.	Delay 999.9 µs + Step 22 residual delay (±0.1 µs)	_____
31.	Delay 12.358 ms + Step 22 residual delay (±1.2 µs)	_____
(5) Power Meter		
6.	Waveguide Coupler value	_____
7.	1 kW Test RF Level (2-2-2, Table 4)	_____
	12 kW Test RF Level (2-2-2, Table 4)	_____
10.	PANEL Meter (43) shows ***1 kW*** (852 to 1148 W).	_____
12.	PANEL Meter (43) shows ***12 kW*** (10224 to 13776 W).	_____
(6) XMTR DSCRM .1V/MHz Connector		
10.	FREQUENCY Hz/MHz Digital Display (1) readout	_____
13.	Pulse level decreases 50 mV (45 to 55 mV).	_____
17.	Pulse level increases 50 mV (45 to 55 mV).	_____

STEP	DATA	RESULT
(7) Inputs		
(a) AM EXT INPUT Connector		
5.	30% Modulation (28% to 32%)	_____
(b) EXT TRIG Connector		
4.	***EXT (+)*** Sync pulse appears	_____ (√)
8.	***EXT (-)*** Sync pulse appears	_____ (√)

THIS PAGE INTENTIONALLY LEFT BLANK.

H. Calibration Procedures

(1) Power Supply (Refer to 2-2-2, Figure 14.)

PREREQUISITE: None

TEST EQUIPMENT: 1 Digital Multimeter (DMM)
1 Oscilloscope

STEP PROCEDURE

1. Press LINE Switch (30) to ***OFF.***
2. Remove four screws from top cover on RD-301A. Slide top cover to rear and remove from RD-301A.
3. Press LINE Switch (30) to ***ON.***
4. Use DMM to verify voltages between Test Points listed in 2-2-2, Table 5 and ground at TB49001-5.

TEST POINT	VOLTAGE LIMITS	RIPPLE VOLTAGE
TB49001-3 (+5 V)	+4.7 to +5.3 Vdc	≤15 mV_{P-P}
TB49001-2 (+12 V)	+11.4 to +12.6 Vdc	≤15 mV_{P-P}
TB49001-4 (-12 V)	-11.4 to -12.6 Vdc	≤15 mV_{P-P}
TB49001-1 (-24 V)	-22.0 to -25.2 Vdc	≤20 mV_{P-P}

Power Supply Terminal Bus Voltages
Table 5

5. Use Oscilloscope to verify ripple voltages between Test Points listed in 2-2-2, Table 5 and ground at TB49001-5.
6. Disconnect test equipment and replace top cover on RD-301A.

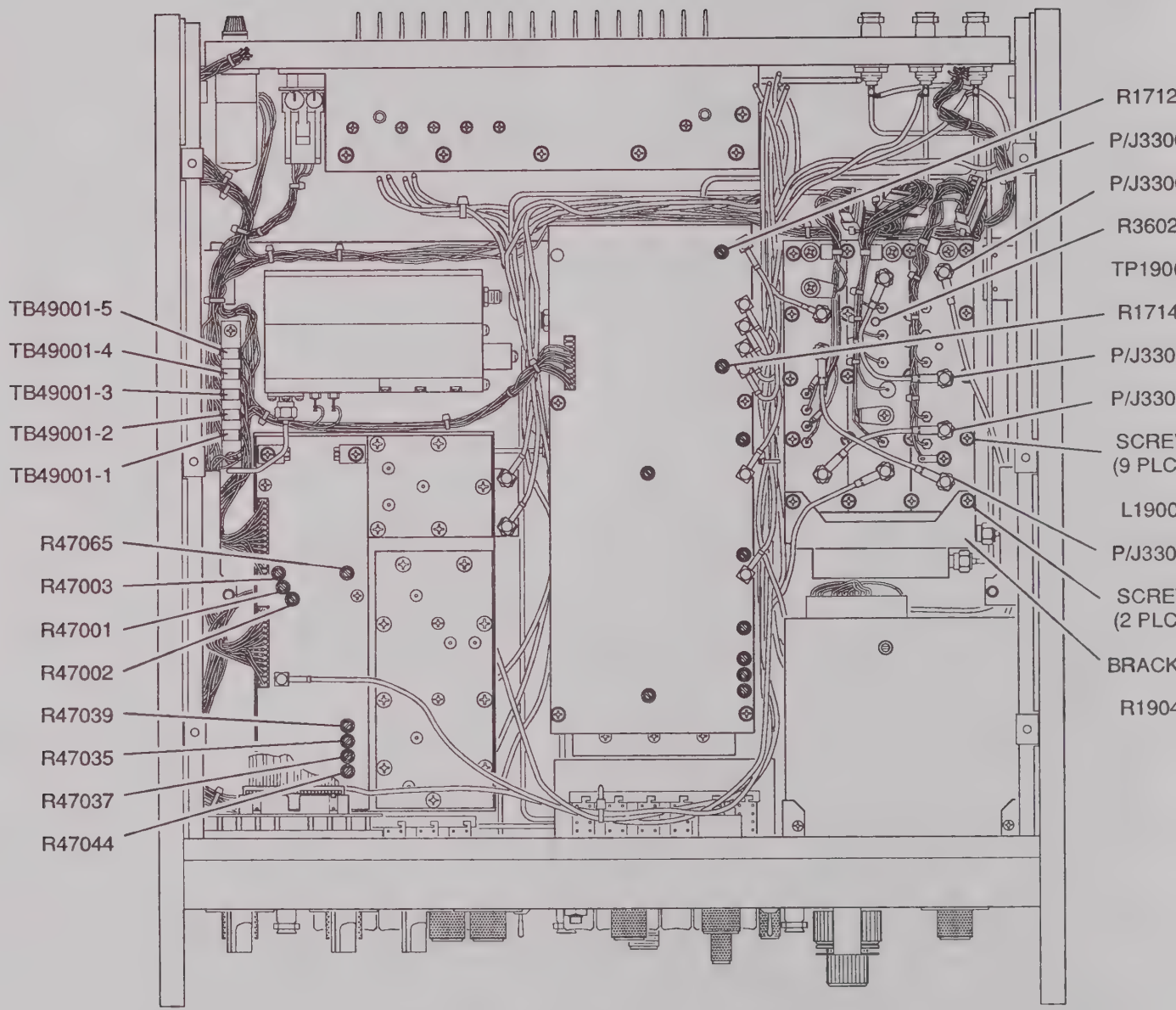

Floor Test Points and Adjustments
Figure 14

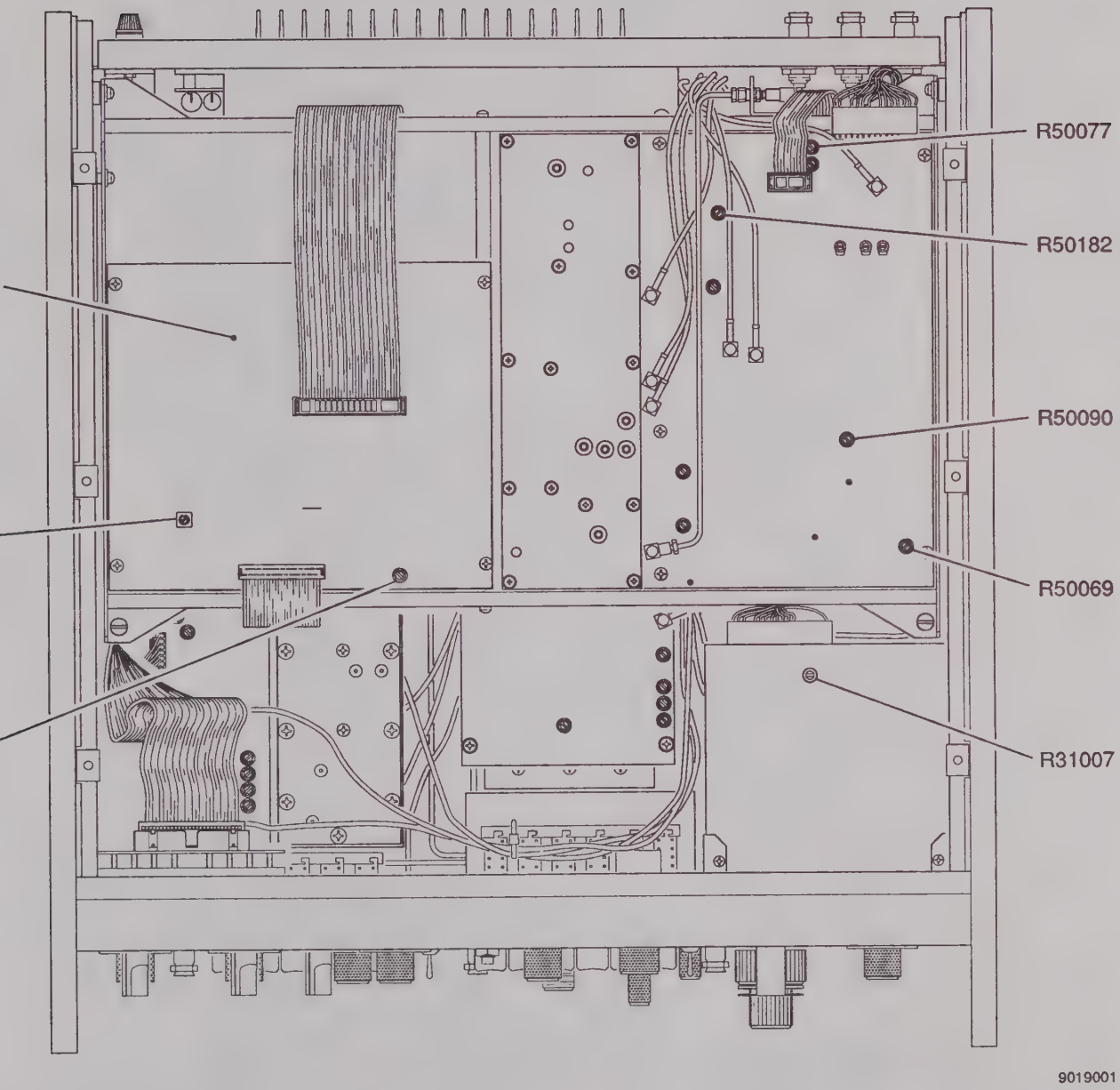

Card Frame Top Test Points and Adjustments
Figure 15

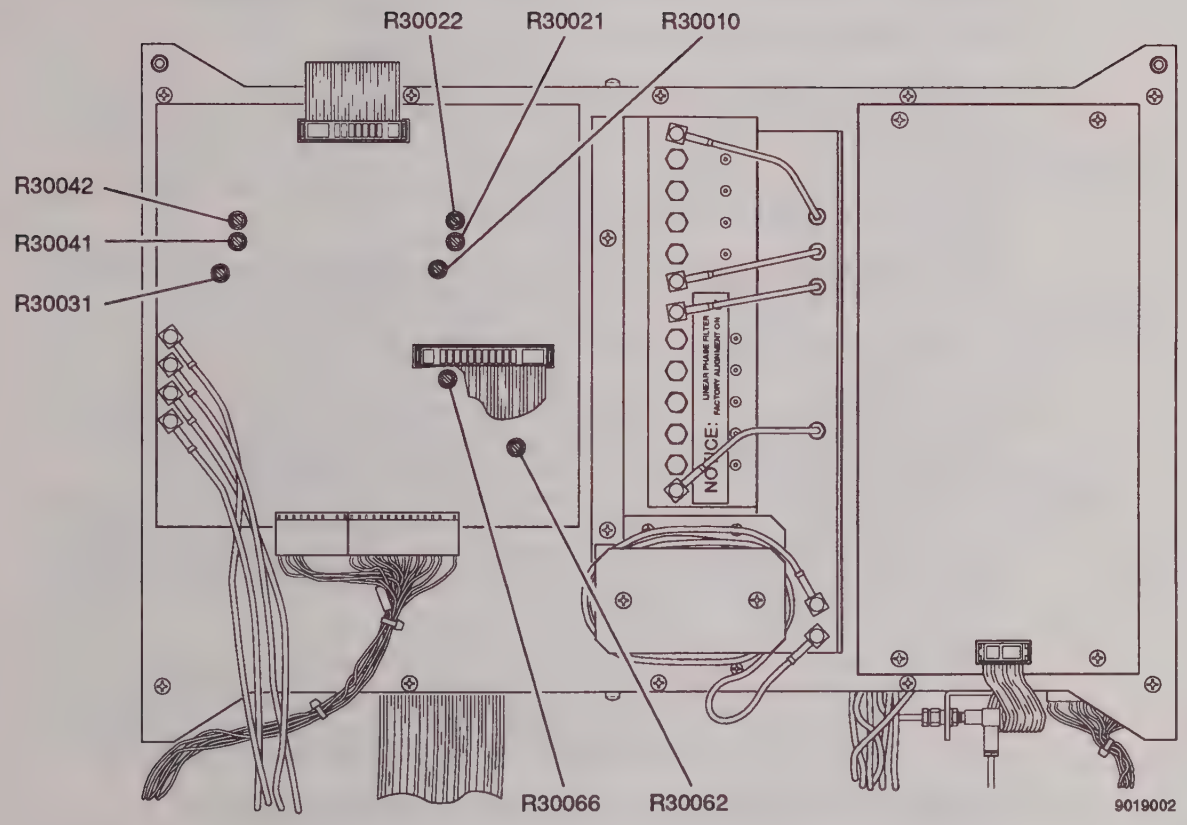

Card Frame Bottom Test Points and Adjustments
Figure 16

(2) 100 MHz Clock (Refer to Figure 15.)

PREREQUISITE: 2-2-2H(1)

TEST EQUIPMENT: 1 Frequency Counter
1 10:1 Oscilloscope Probe

STEP	PROCEDURE

1. Apply power to RD-301A and allow for 30 minute stabilization period.
2. Refer to 2-2-2H(1), Step 2 and remove top cover from RD-301A.
3. Set µS/NM Switch (36) to ***µS***.
4. Connect 10:1 Oscilloscope Probe from Frequency Counter to TP19001 on Range #1 PC Board Assembly.
5. Verify frequency is 100 MHz (±5 kHz). If not, adjust L19002 on Range #1 PC Board Assembly. Record frequency.

   NOTE: Adjusting L19002 also affects µs Range Delay and FREQUENCY Hz/MHz Digital Display (1) counter (10 kHz time base).

6. Set µS/NM Switch (36) to ***NM***.
7. Verify frequency at TP19001 is 8.09133 MHz (±150 Hz). If oscillator is not in tolerance after following proper stabilization procedures and insuring adequate Frequency Counter accuracy, change value of C19015 on Range #1 PC Board Assembly. Refer to Range #1 PC Board Assembly and Circuit Schematic drawings for component location and circuit understanding. Value for C19015 may range from 68 to 100 pF (type NPO). If C19015 is replaced, allow RD-301A to restabilize before retesting. Record frequency.

   NOTE: 100 MHz Clock calibration errors affect the representation of Radar transmitter and RD-301A frequencies shown on the FREQUENCY Hz/MHz Digital Display (1). Frequency Tracking accuracy is not affected by 100 MHz Clock calibration errors.

8. Disconnect test equipment and replace top cover on RD-301A.

(3) 8.25 GHz LO (Refer to 2-2-2, Figure 17.)

PREREQUISITE: 2-2-2H(2)

TEST EQUIPMENT: 1 Digital Multimeter (DMM)
1 Frequency Counter

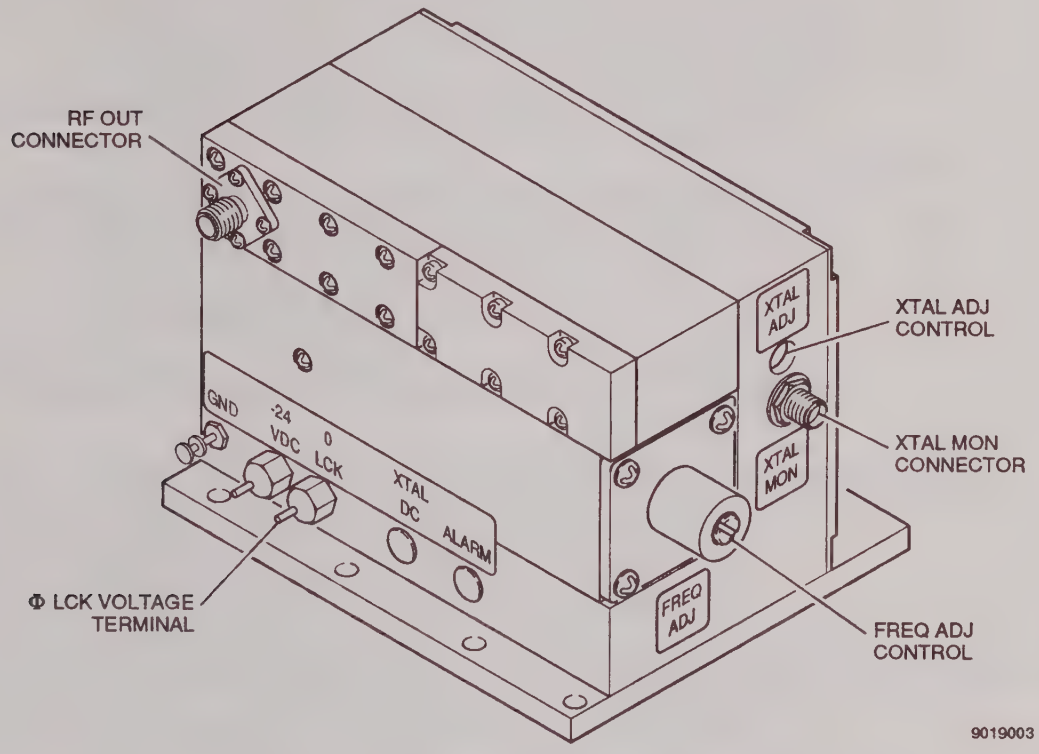

8.25 GHz LO Test Points and Adjustments
Figure 17

STEP	PROCEDURE

1. Apply power to RD-301A and allow for 30 minute stabilization period.

2. Set RD-301A as follows:

CONTROL		SETTING
(2)	PRF/RF Switch	***RF***
(4)	OUTPUT LEVEL FINE dBm Control	***0***
(9)	OUTPUT LEVEL COARSE dBm Control	***-50***
(10)	MNL FREQ Controls	***9375 MHz***
(16)	RF/IF MODE Pushbutton Switches	***MNL***
(29)	MODULATION MODE Pushbutton Switches	***CW***

3. Refer to 2-2-2H(1), Step 2 and remove top cover from RD-301A.

STEP PROCEDURE

4. Connect Frequency Counter to XTAL MON (Crystal Monitor) Connector on right side of 8.25 GHz LO.

5. Place top cover loosely on RD-301A, insuring cable is not damaged.

6. Monitor frequency 15 minutes to insure drift is stabilized.

7. After stabilization, verify frequency is 103.125 MHz (±2.1 kHz). Adjust XTAL ADJ (Crystal Adjustment) on 8.25 GHz LO as needed. Allow time for restabilization after adjustment. Record adjusted frequency.

8. Use DMM to verify voltage between Φ LCK (Phase Lock) Voltage Terminal on 8.25 GHz LO and ground is -10 Vdc (±5 Vdc). If voltage is out of tolerance, adjust FREQ ADJ Control for correct voltage.

9. Disconnect test equipment and replace top cover on RD-301A.

10. Connect Frequency Counter to X-BAND I/O Connector (18). Verify FREQUENCY Hz/MHz Digital Display (1) matches Frequency Counter reading (±250 kHz).

    NOTE: FREQUENCY Hz/MHz Digital Display (1) accuracy depends on the frequency precision of the 8.25 GHz LO signal and 10 kHz Clock derived from the 100 MHz Oscillator on Range #1 PC Board Assembly. The frequency shown on the FREQUENCY Hz/MHz Digital Display (1) indirectly represents the signal frequency at the X-BAND I/O Connector (18). The FREQUENCY Hz/MHz Digital Display (1) shows the frequency count (10 kHz Clock base) of the prescaled L-Band signal added to a fixed 8250 MHz offset (8.25 GHz LO ideal frequency). The L-Band signal (1045-1250 MHz) generated by the VCO #2 Assembly is converted up by the 8.25 GHz LO signal to provide the X-Band signal at the X-BAND I/O Connector (18).

    NOTE: 8.25 GHz LO calibration errors do not affect Frequency Tracking accuracy. The received Radar transmitter signal is converted down by the same 8.25 GHz LO signal the RD-301A L-Band signal is converted up by.

(4) RF Display Limits (Refer to 2-2-2, Figure 14.)

PREREQUISITE: 2-2-2H(3)

TEST EQUIPMENT: None

STEP PROCEDURE

1. Apply power to RD-301A and allow for 30 minute stabilization period.

2. Set RD-301A as follows:

CONTROL		SETTING
(2)	PRF/RF Switch	***RF***
(4)	OUTPUT LEVEL FINE dBm Control	***0***
(9)	OUTPUT LEVEL COARSE dBm Control	***-50***
(16)	RF/IF MODE Pushbutton Switches	***MNL***
(29)	MODULATION MODE Pushbutton Switches	***CW***

3. Rotate MNL FREQ Controls (10) ***fully cw***.

4. Verify 9508 MHz (±5.0 MHz) on FREQUENCY Hz/MHz Digital Display (1). If not in tolerance, refer to 2-2-2H(1), Step 2 and remove top cover from RD-301A. Adjust R47035 on AGC PC Board Assembly until ***9508 MHz*** is shown on FREQUENCY Hz/MHz Digital Display (1).

5. Rotate MNL FREQ Controls (8) ***fully ccw***.

6. Verify 9287 MHz (±5.0 MHz) on FREQUENCY Hz/MHz Digital Display (1). If not in tolerance, refer to 2-2-2H(1), Step 2 and remove top cover from RD-301A. Adjust R47039 on AGC PC Board Assembly until ***9287 MHz*** is shown on FREQUENCY Hz/MHz Digital Display (1).

7. Repeat Steps 3 through 6 until no more adjustments are required.

8. If removed, replace top cover on RD-301A and repeat Steps 3 through 6 with top cover on.

(5) Marker Oscillator (Refer to 2-2-2, Figure 14.)

PREREQUISITES: 2-2-2H(3)

TEST EQUIPMENT: 1 Frequency Counter

STEP	PROCEDURE

1. Refer to 2-2-2H(1), Step 2 and remove top cover from RD-301A.
2. Disconnect following coaxial cables and connectors:
   - P33001 (AGC PC Board Assembly) from J33001 (IF MKR/OSC PC Board Assembly)
   - P33002 (IF GEN PWR AMPL PC Board Assembly) from J33002 (IF MKR/OSC PC Board Assembly)
   - P33003 (Main Wire Harness Assembly) from J33003 (IF MKR/OSC PC Board Assembly)
   - P33004 (Prescaler PC Board Assembly, P/J23003) from J33004 (IF MKR/OSC PC Board Assembly)
   - P33005 (Prescaler PC Board Assembly, P/J23004) from J33005 (IF MKR/OSC PC Board Assembly)
3. Remove two screws and move Bracket away from IF MKR/OSC PC Board Assembly.
4. Remove nine screws and remove IF MKR/OSC PC Board Assembly from enclosure.
5. Place IF MKR/OSC PC Board Assembly on insulated medium (thick cardboard recommended), close enough to reconnect coaxial cables and connectors.
6. Carefully position IF MKR/OSC PC Board Assembly for access to C33034 and L33001. Refer to IF MKR/OSC PC Board Assembly drawing.
7. Reconnect coaxial cables and connectors disconnected in Step 2 except P/J33005.
8. Connect Frequency Counter to J33005.
9. Apply power to RD-301A and allow for 30 minute stabilization period.
10. Rotate MKR FREQ Control (19) ***fully ccw***.
11. Press DISPLAY MKR Switch (21).
12. Verify ≤18.0 MHz is shown on Frequency Counter. If not, adjust C33034 on IF MKR/OSC PC Board Assembly.
13. Rotate MKR FREQ Control (19) ***fully cw***.

STEP PROCEDURE

14. Press DISPLAY MKR Switch (21).

15. Verify Frequency Counter indicates ≥74 MHz.

    NOTE: Frequency drifts lower with assembly in enclosure and RD-301A at stabilized temperature.

16. Replace IF MKR/OSC PC Board Assembly in enclosure. Replace and tighten all screws.

17. Disconnect Frequency Counter from J33005.

18. Reconnect P33005 to J33005.

19. Replace top cover on RD-301A.

20. Set PRF/RF Switch (2) to ***RF*** and select ***IF HI*** on RF/IF MODE Pushbutton Switches (16).

21. Press DISPLAY MKR Switch (21).

22. Verify ≥70 MHz is shown on FREQUENCY Hz/MHz Digital Display (1). Record frequency.

23. Rotate MKR FREQ Control (19) ***fully ccw.***

24. Press DISPLAY MKR Switch (21).

25. Verify ≤20 MHz is shown on FREQUENCY Hz/MHz Digital Display (1). Record frequency.

(6) IF Oscillator (Refer to 2-2-2, Figure 14.)

PREREQUISITES: 2-2-2H(3)

TEST EQUIPMENT: 1 Frequency Counter
1 Digital Multimeter (DMM)
1 Spectrum Analyzer

STEP	PROCEDURE

1. Apply power to RD-301A and allow for 30 minute stabilization period.
2. Refer to 2-2-2H(1), Step 2 and remove top cover from RD-301A.
3. Set PRF/RF Switch (2) to ***RF*** and select ***IF HI*** on RF/IF MODE Pushbutton Switches (16).
4. Rotate MNL FREQ Controls (10) ***fully cw***.
5. Verify FREQUENCY Hz/MHz Digital Display (1) indicates 77 MHz. If not, adjust R47037 on AGC PC Board Assembly.
6. Rotate MNL FREQ Controls (10) ***fully ccw***.
7. Verify FREQUENCY Hz/MHz Digital Display (1) indicates ≤18 MHz. If not, adjust R47044 on AGC PC Board Assembly.
8. Rotate MNL FREQ Controls (10) ***fully cw***.
9. Verify FREQUENCY Hz/MHz Digital Display (1) indicates ≥74 MHz. If not, repeat Steps 5 through 9 until indications are correct. Record correct upper and lower frequency indications and proceed at Step 38. If unable to attain correct indications, proceed at Step 10.

   NOTE: Frequency drifts lower with assembly in enclosure and RD-301A at stabilized temperature.

10. Press LINE Switch (30) to ***OFF***.
11. Disconnect following coaxial cables and connectors:

    - P33001 (AGC PC Board Assembly) from J33001 (IF MKR/OSC PC Board Assembly)
    - P33002 (IF GEN PWR AMPL PC Board Assembly) from J33002 (IF MKR/OSC PC Board Assembly)
    - P33003 (Main Wire Harness Assembly) from J33003 (IF MKR/OSC PC Board Assembly)
    - P33004 (Prescaler PC Board Assembly, P/J23003) from J33004 (IF MKR/OSC PC Board Assembly)
    - P33005 (Prescaler PC Board Assembly, P/J23004) from J33005 (IF MKR/OSC PC Board Assembly)

STEP PROCEDURE

12. Remove two screws and move Bracket away from IF MKR/OSC PC Board Assembly.

13. Remove nine screws and remove IF MKR/OSC PC Board Assembly from enclosure.

14. Place IF MKR/OSC PC Board Assembly on insulated medium (thick cardboard recommended), close enough to reconnect coaxial cables and connectors.

15. Carefully position IF MKR/OSC PC Board Assembly for access to C33034 and L33001. Refer to IF MKR/OSC PC Board Assembly drawing.

16. Reconnect coaxial cables and connectors disconnected in Step 11 except P/J33004.

17. Connect Frequency Counter to J33004 with 50 Ω coaxial cable.

18. Connect DMM between ground at TB49001-5 and anode lead of CR47006 on AGC PC Board Assembly. Refer to AGC PC Board Assembly drawing.

19. Press LINE Switch (30) to ***ON*** and allow for five minute stabilization period.

20. Set R47044 on AGC PC Board Assembly to center position.

21. Adjust R47037 on AGC PC Board Assembly for -18.0 V on DMM.

22. Refer to IF MKR/OSC PC Board Assembly drawing and adjust L47001 on IF MKR/OSC PC Board Assembly for 77.0 MHz on Frequency Counter.

23. Rotate MNL FREQ Controls (10) ***fully ccw*** and adjust R47044 for 17.0 MHz on Frequency Counter.

24. Verify tune line voltage on DMM is ≈-2.0 V.

25. Rotate MNL FREQ Controls (10) ***fully cw*** and verify 77 MHz on Frequency Counter.

26. Readjust R47037 and R47044 to achieve frequency range from 17.0 to 77.0 MHz.

27. Disconnect Frequency Counter from J33004.

28. Reconnect P33004 to J33004.

MIXER BALANCE ADJUSTMENT

29. Disconnect P33002 from J33002

30. Connect Spectrum Analyzer to J33002.

STEP PROCEDURE

31. Set Spectrum Analyzer as follows:

CONTROL	SETTING
Center Frequency	50 MHz
Frequency Span	10 MHz/Div
Amplitude Scale	10 dB/Div
Input Attenuation	30 dB

32. Adjust MNL FREQ Controls (10) for ***60 MHz*** on FREQUENCY Hz/MHz Digital Display (1).

33. Refer to IF MKR/OSC PC Board Assembly drawing and adjust R33024 on IF MKR/OSC PC Board Assembly for maximum 60 MHz signal with minimum spurious signals.

34. Disconnect test equipment.

35. Replace IF MKR/OSC PC Board Assembly in enclosure. Replace and tighten all screws.

36. Reconnect P33002 to J33002.

37. Repeat Steps 3 through 9.

SWEEP WIDTH

38. Connect Spectrum Analyzer to IF OUT Connector (15).

39. Set Spectrum Analyzer as follows:

CONTROL	SETTING
Center Frequency	30 MHz
Frequency Span	500 kHz/Div
Reference Level	+20 dBm
Sweep Speed	50 ms/Div

40. Adjust MNL FREQ Controls (10) for ***30 MHz*** on FREQUENCY Hz/MHz Digital Display (1).

41. Adjust SWEEP WIDTH MHz Control (33) ***cw***.

STEP PROCEDURE

42. Verify carrier starts sweeping when SWEEP WIDTH MHz Control (33) passes ***0*** setting. If not, reset SWEEP WIDTH MHz Control (33) as follows:

    - Remove two set screws and dial.
    - Rotate control shaft cw until carrier begins to sweep.
    - Rotate shaft control ccw until sweep stops.
    - Without rotating control, replace dial with index mark set to zero and tighten two set screws.

43. Set SWEEP WIDTH MHz Control (33) to ***4***.

44. Verify carrier sweep is displayed across 8.0 divisions (4 MHz sweep width) on Spectrum Analyzer. If not, adjust R31007 on Counter Gating PC Board.

45. Set SWEEP WIDTH MHz Control (33) to ***2***.

46. Verify carrier sweep (2 MHz wide) is displayed across 4.0 divisions (±2 minor divisions) on Spectrum Analyzer. If not, adjust R31007 on Counter Gating PC Board.

47. If needed, adjust R31007 until carrier sweep at 2 and 4 MHz is within 10% of dial setting. Record sweep width at both settings.

48. Set SWEEP WIDTH MHz Control (33) to ***OFF***.

49. Disconnect test equipment and replace top cover on RD-301A.

(7) IF Generator Power Amplifier (Refer to Figure 14.)

PREREQUISITES: 2-2-2H(6)

TEST EQUIPMENT:
1 Spectrum Analyzer
1 Power Meter
1 L-Band Signal Generator

STEP PROCEDURE

1. Apply power to RD-301A and allow for 30 minute stabilization period.

2. Set RD-301A as follows:

CONTROL		SETTING
(2)	PRF/RF Switch	***RF***
(4)	OUTPUT LEVEL FINE dBm Control	***0***
(9)	OUTPUT LEVEL COARSE dBm Control	***0***
(16)	RF/IF MODE Pushbutton Switches	***IF HI***
(29)	MODULATION MODE Pushbutton Switches	***CW***

3. Refer to 2-2-2H(1), Step 2 and remove top cover from RD-301A.

4. Set Spectrum Analyzer RF for 30 MHz signal at 0 dBm and Amplitude Scale to 2 dB/Div.

5. Connect L-Band Signal Generator to Spectrum Analyzer using high quality RG58 BNC coaxial cable.

6. Set L-Band Signal Generator for 30 MHz CW signal. Insure all harmonics and spurious signals are ≥30 dB below carrier for accurate power measurements.

7. Disconnect L-Band Signal Generator from Spectrum Analyzer.

8. Connect L-Band Signal Generator to Power Meter using same RG58 BNC coaxial cable.

9. Adjust L-Band Signal Generator for 0 dBm on Power Meter.

10. Reconnect L-Band Signal Generator to Spectrum Analyzer using same cable. Record reference level of 30 MHz CW signal at 0 dBm on Spectrum Analyzer screen with reference level accurate to ±0.2 dB.

11. Disconnect L-Band Signal Generator from Spectrum Analyzer.

12. Connect IF OUT Connector (15) to Spectrum Analyzer using same cable used to set reference level.

13. Rotate MNL FREQ Controls (10) to indicate ***30 MHz*** on FREQUENCY Hz/MHz Digital Display (1).

STEP PROCEDURE

14. Adjust R36023 on IF GEN PWR AMPL PC Board Assembly to match signal amplitude on Spectrum Analyzer of 30 MHz reference level recorded in Step 10.

15. Disconnect Spectrum Analyzer from IF OUT Connector (15).

16. Set Spectrum Analyzer RF for a signal of 60 MHz at 0 dBm.

17. Connect L-Band Signal Generator to Spectrum Analyzer using same RG58 BNC coaxial cable.

18. Set L-Band Signal Generator for 60 MHz CW signal. Insure all harmonics and spurious signals are ≥30 dB below carrier for accurate power measurements.

19. Disconnect L-Band Signal Generator from Spectrum Analyzer.

20. Connect L-Band Signal Generator to Power Meter using same RG58 BNC coaxial cable.

21. Adjust L-Band Signal Generator for 0 dBm on Power Meter.

22. Reconnect L-Band Signal Generator to Spectrum Analyzer using same cable. Record reference level of 60 MHz CW signal at 0 dBm on Spectrum Analyzer screen with reference level accurate to ±0.2 dB.

23. Disconnect L-Band Signal Generator from Spectrum Analyzer.

24. Connect IF OUT Connector (15) to Spectrum Analyzer using same cable used to set reference level.

25. Rotate MNL FREQ Controls (10) to indicate ***60 MHz*** on FREQUENCY Hz/MHz Digital Display (1).

26. Verify Spectrum Analyzer indicates 0 dBm (±2.5 dB). If not, adjust R36023.

27. If R36023 is adjusted in Step 26, repeat Steps 4 through 26 until 30 MHz and 60 MHz signals both indicate 0 dBm (±2.5 dB) on Spectrum Analyzer.

28. Disconnect test equipment and replace top cover on RD-301A.

(8) External AM (Refer to 2-2-2, Figure 14.)

PREREQUISITES: 2-2-2H(2)

TEST EQUIPMENT:
1 Function Generator
1 Modulation Meter
1 X-Band to L-Band Down Converter (Refer to Appendix D.)

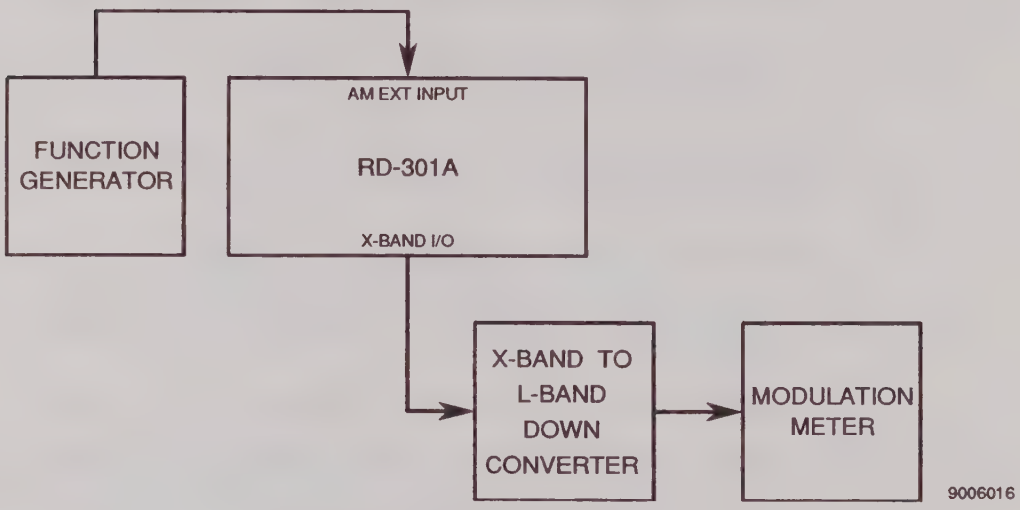

External AM Calibration Setup
Figure 18

STEP	PROCEDURE

1. Apply power to RD-301A and allow for 30 minute stabilization period.

2. Set RD-301A as follows:

CONTROL		SETTING
(2)	PRF/RF Switch	***RF***
(9)	OUTPUT LEVEL COARSE dBm Control	***-50***
(10)	MNL FREQ Controls	***9375 MHz***
(16)	RF/IF MODE Pushbutton Switches	***RF MNL***
(29)	MODULATION MODE Pushbutton Switches	***CW***

3. Refer to 2-2-2H(1), Step 2 and remove top cover from RD-301A.

4. Connect test equipment as shown in 2-2-2, Figure 18.

5. Set Function Generator for 1 kHz sine wave at 3 V_{P-P}.

6. Verify 30% (±2%) modulation on Modulation Meter. If not, adjust R47003 on AGC PC Board Assembly.

7. Disconnect test equipment and replace top cover on RD-301A.

(9) Levelers (Refer to 2-2-2, Figure 14.)

PREREQUISITES: None

TEST EQUIPMENT:
1 Function Generator
1 Power Meter (Refer to Appendix D.)
1 Spectrum Analyzer

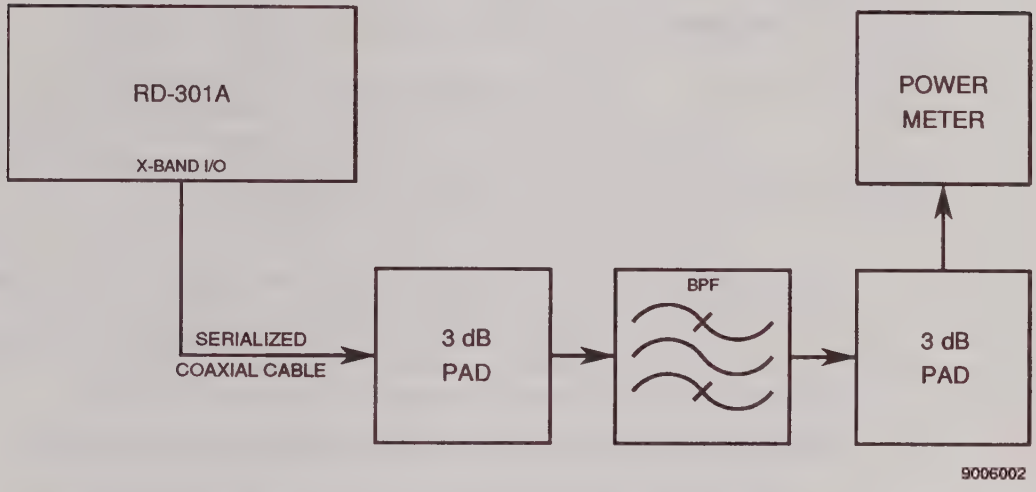

Main Leveler Calibration Setup
Figure 19

STEP	PROCEDURE

1. Apply power to RD-301A and allow for 30 minute stabilization period.

2. Set RD-301A as follows:

CONTROL		SETTING
(2)	PRF/RF Switch	***RF***
(3)	CONTOUR/R2/INTL AM dB BOOST/ATTEN Control	***00***
(4)	OUTPUT LEVEL FINE dBm Control	***-3***
(9)	OUTPUT LEVEL COARSE dBm Control	***-50***
(10)	MNL FREQ Controls	***9400 MHz***
(16)	RF/IF MODE Pushbutton Switches	***RF MNL***
(29)	MODULATION MODE Pushbutton Switches	***CW***
(39)	RANGE SEL Switch	***RINGS 1***

MAIN LEVELER

3. Connect test equipment as shown in 2-2-2, Figure 19.

NOTE: Assembled 3 dB Pads and Bandpass Filter require flatness of ±0.1 dB from 9295 to 9500 MHz. Once loss and flatness of filter-pad assembly have been characterized, assembly should not be disassembled.

STEP PROCEDURE

4. Move Serialized Coaxial Cable and observe Power Meter display. If display fluctuates more than 0.1 dB, replace Serialized Coaxial Cable.

5. Use 2-2-2, Equation 1 to compute X-Band Output Power Level (A). Tolerance is X-Band Output Power Level (A) (±2 dB).

   EQUATION 1: A = B + C + D

   Where:
   - A = Computed X-Band Output Power Level
   - B = RD-301A Output Level Settings (OUTPUT LEVEL FINE and COARSE dBm Controls [4] and [9])
   - C = Waveguide Coupler Value (attenuation) (marked on Waveguide Coupler)
   - D = Insertion loss of Bandpass Filter and 3 dB Pads

   EXAMPLE:
   RD-301A Output Level Settings (B) = -53.0 dBm
   Waveguide Coupler Value (C) = +20.2 dB
   Insertion Loss of Bandpass Filter (D) = -7.17 dB
   A = –53.0 dBm + +20.2 dB + -7.17 dB
   A = –39.97 dBm

6. Compute X-Band Output Power Level upper limit (A + 2 dB).

7. Compute X-Band Output Power Level lower limit (A – 2 dB).

8. Adjust MNL FREQ Controls (10) from ***9295 MHz*** to ***9500 MHz*** and verify Power Meter reading stays between upper limit from Step 6 and lower limit from Step 7. If so, proceed at Step 14. If not, proceed at Step 9.

9. Adjust MNL FREQ Controls (10) from ***9295 MHz*** to ***9500 MHz*** and record highest and lowest amplitude values. Determine midpoint amplitude value between highest and lowest amplitude values.

10. Refer to 2-2-2H(1), Step 2 and remove top cover from RD-301A.

11. Adjust MNL FREQ Controls (10) to frequency between 9295 MHz and 9500 MHz having power level closest to midpoint amplitude value from Step 9.

12. Adjust R47001 on AGC PC Board Assembly until selected frequency has same power output level as X-Band Output Power Level from Step 5.

13. Adjust MNL FREQ Controls (10) from ***9295 MHz*** to ***9500 MHz*** and verify Power Meter reading stays between upper limit from Step 6 and lower limit from Step 7. If so, proceed at Step 14. If not, repeat Steps 9 through 13.

14. Disconnect test equipment.

CONTOUR LEVELER

15. Use Serialized Coaxial Cable to connect Spectrum Analyzer to X-BAND I/O Connector (18).

STEP PROCEDURE

16. Set Spectrum Analyzer as follows:

CONTROL	SETTING
Center Frequency	9360 MHz
Frequency Span	20 MHz/Div
Resolution Bandwidth (uncoupled)	3 MHz
Amplitude Scale	2 dB/Div
Sweep Speed	10 ms/Div
Input Attenuation	10 dB

NOTE: For all leveler procedures, Spectrum Analyzer video filter can be used with caution, when displayed amplitude is not affected.

17. Set OUTPUT LEVEL FINE dBm Control (4) to ***-5***.

18. Set Spectrum Analyzer amplitude scale for 6 division reference level.

NOTE: Steps 19 through 34 use a dual trace, storage Spectrum Analyzer. Steps 35 through 40 use a non-storage Spectrum Analyzer.

CONTOUR LEVELER - STORAGE SPECTRUM ANALYZER

19. Set Spectrum Analyzer for Max Hold (Trace B).

20. Slowly rotate MNL FREQ Controls (10) from ***9295 MHz*** to ***9410 MHz***.

21. Store reference trace (Trace B).

22. Set RANGE SEL Switch (39) to ***CONTOUR/AM UP MOD***.

23. Set Spectrum Analyzer for Max Hold (Trace A).

24. Slowly rotate MNL FREQ Controls (10) from ***9295 MHz*** to ***9410 MHz***.

NOTE: Using Spectrum Analyzer, Normalizer displays a single trace to represent signal level difference of Trace A with respect to Trace B, referenced to a zero line.

25. Verify Trace A level equals Trace B reference level (±1 dB) across specified band. If not, adjust R47002 on AGC PC Board Assembly.

NOTE: Difference in level between two signals (Main and Contour) is measured at all frequencies to verify unit meets specifications. Absolute level of two signals, shown by Spectrum Analyzer, is unimportant.

26. Set OUTPUT LEVEL COARSE dBm Control (9) to ***-60*** and CONTOUR/R2/INTL AM dB BOOST/ATTEN Control (3) to ***10***.

27. Set Spectrum Analyzer for Max Hold (Trace A).

28. Slowly rotate MNL FREQ Controls (10) from ***9295 MHz*** to ***9410 MHz***.

STEP PROCEDURE

29. Verify difference between Trace A level and Trace B reference level is ≤1 dB across specified band.

30. Set OUTPUT LEVEL COARSE dBm Control (9) to ***-70*** and CONTOUR/R2/INTL AM dB BOOST/ATTEN Control (3) to ***20***.

31. Set Spectrum Analyzer for Max Hold (Trace A).

32. Slowly rotate MNL FREQ Controls (10) from ***9295 MHz*** to ***9410 MHz***.

33. Verify difference between Trace A level and Trace B reference level is ≤1 dB across specified band.

34. Proceed at Step 41.

CONTOUR LEVELER - NON-STORAGE SPECTRUM ANALYZER

35. Slowly rotate MNL FREQ Controls (10) from ***9295 MHz*** to ***9410 MHz***. While rotating MNL FREQ Controls (10), frequently switch RANGE SEL Switch (39) between ***RINGS 1*** and ***CONTOUR/AM UP MOD***. Verify displayed levels of both modes are equal (±1 dB). If not, adjust R47002 on AGC PC Board Assembly.

36. Set Spectrum Analyzer amplitude scale to 5 dB/Div.

37. Set OUTPUT LEVEL COARSE dBm Control (9) to ***-60*** and CONTOUR/R2/INTL AM dB BOOST/ATTEN Control (3) to ***10***.

38. Slowly rotate MNL FREQ Controls (10) from ***9295 MHz*** to ***9410 MHz***. While rotating MNL FREQ Controls (10), frequently switch RANGE SEL Switch (39) between ***RINGS 1*** and ***CONTOUR/AM UP MOD***. Verify change from ***RINGS 1*** to ***CONTOUR/AM UP MOD*** increases output level by 10 dB (±1 dB).

39. Set OUTPUT LEVEL COARSE dBm Control (9) to ***-70*** and CONTOUR/R2/INTL AM dB BOOST/ATTEN Control (3) to ***20***.

40. Slowly rotate MNL FREQ Controls (10) from ***9295 MHz*** to ***9410 MHz***. While rotating MNL FREQ Controls (10), frequently switch RANGE SEL Switch (39) between ***RINGS 1*** and ***CONTOUR/AM UP MOD***. Verify change from ***RINGS 1*** to ***CONTOUR/AM UP MOD*** increases output level by 20 dB (±1 dB).

STEP PROCEDURE

R1/R2 LEVELER

41. Reset RD-301A controls as follows:

CONTROL		SETTING
(2)	PRF/RF Switch	***PRF***
(3)	CONTOUR/R2/INTL AM dB BOOST/ATTEN Control	***06***
(4)	OUTPUT LEVEL FINE dBm Control	***-5***
(9)	OUTPUT LEVEL COARSE dBm Control	***-50***
(29)	MODULATION MODE Pushbutton Switches	***INTL***
(31)	PULSE WIDTH µS Control (RANGE 2)	***5***
(32)	PULSE WIDTH µS Control (RANGE 1)	***5***
(34)	PULSE WIDTH MULTIPLIER Control (RANGE 1)	***100***
(36)	µS/NM Switch	***µS***
(37)	RANGE 1 DELAY Thumbwheels	***001.0***
(38)	RANGE 2 DELAY Thumbwheels	***700.0***
(39)	RANGE SEL Switch	***R2 ON***
(42)	X1/X10 INTL PRF/AM Switch	***X10***

42. Set INTL PRF/AM Control (41) for ***700 Hz*** on FREQUENCY Hz/MHz Digital Display (1).

43. Set PRF/RF Switch (2) to ***RF***.

NOTE: Steps 44 through 52 use a dual trace, storage Spectrum Analyzer. Steps 53 through 55 use a non-storage Spectrum Analyzer.

R1/R2 LEVELER - STORAGE SPECTRUM ANALYZER

44. Set PULSE WIDTH MULTIPLIER Control (RANGE 2) (35) to ***.1***.

45. Set Spectrum Analyzer video filter to .01 and frequency span to 10 MHz/Div.

46. Set Spectrum Analyzer for Max Hold (Trace B).

47. Slowly rotate MNL FREQ Controls (10) from ***9295 MHz*** to ***9410 MHz***.

48. Store reference trace (Trace B) (Range 1 Reply Pulse amplitude level).

49. Set PULSE WIDTH MULTIPLIER Control (RANGE 1) (34) to ***.1*** and PULSE WIDTH MULTIPLIER Control (RANGE 2) (35) to ***100***.

50. Set Spectrum Analyzer for Max Hold (Trace A).

51. Slowly rotate MNL FREQ Controls (10) from ***9295 MHz*** to ***9410 MHz***.

52. Verify Trace A level is 6 dB (±1 dB) below Trace B reference level across specified band. Refer to 2-2-2, Figure 20. If not, adjust R47065 on AGC PC Board Assembly.

53. Proceed at Step 57.

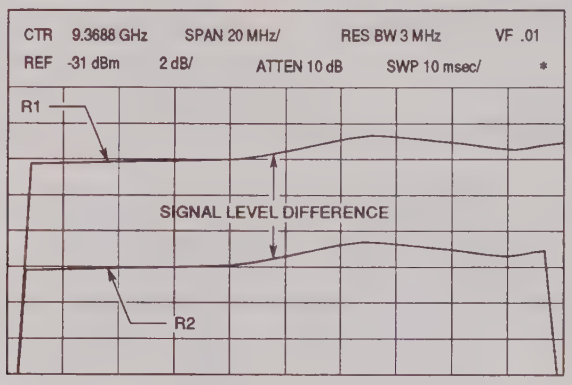

R1 and R2 Signal Levels as Stored Traces
Figure 20

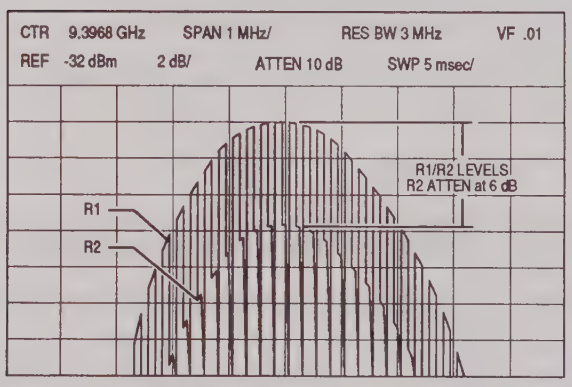

R1 and R2 Signal Levels
Figure 21

R1/R2 LEVELER - NON-STORAGE SPECTRUM ANALYZER

54. Set PULSE WIDTH MULTIPLIER Control (RANGE 2) (35) to ***.1***.

55. Set Spectrum Analyzer frequency span to 1 MHz/Div and sweep speed to 5 ms/Div.

56. Slowly rotate MNL FREQ Controls (10) from ***9295 MHz*** to ***9410 MHz*** while tuning Spectrum Analyzer frequency to track pulses. Refer to 2-2-2, Figure 21. Verify difference between R1 and R2 pulse peaks is 6 dB (±1.5 dB) across specified band. If not, adjust R47065 on AGC PC Board Assembly.

    NOTE: Connecting Spectrum Analyzer external trigger input to SYNC Connector (26) may help define pulse peaks.

57. Disconnect test equipment and teplace top cover on RD-301A.

(10) Internal PRF (Refer to 2-2-2, Figure 16.)

PREREQUISITE: 2-2-2H(2)

TEST EQUIPMENT: 1 Oscilloscope

STEP PROCEDURE

1. Apply power to RD-301A and allow for 30 minute stabilization period.
2. Set RD-301A as follows:

CONTROL	SETTING
(2) PRF/RF Switch	***PRF***
(29) MODULATION MODE Pushbutton Switches	***INTL***
(42) X1/X2 INTL PRF/AM Switch	***X1***

3. Connect Oscilloscope to SYNC Connector (26).
4. Adjust INTL PRF/AM Control (41) for FREQUENCY Hz/MHz Digital Display (1) reading of ***50 Hz***.
5. Verify INTL PRF/AM Control (41) is within area marked for ***50 Hz***. If not, reset INTL PRF/AM Control (41) as follows:
   - Remove two set screws and dial.
   - Reset dial onto shaft with INTL PRF/AM Control (41) set to ***50***.
   - Tighten two set screws.
6. Set Oscilloscope with sweep speed at 2 ms/Div to display SYNC Connector (26) output.
7. Refer to 2-2-2H(1), Step 2 and remove top cover from RD-301A.
8. Verify sync pulse shown on Oscilloscope has 50% (±2.5%) duty cycle. (Positive excursion is same time as negative excursion ±≈1 minor division.) If not, adjust R30062 on Range #2 PC Board Assembly.
9. Set INTL PRF/AM Control (41) to initial line marked for ***500 Hz***.
10. Verify FREQUENCY Hz/MHz Digital Display (1) reads ***500 Hz*** (±1 Hz). If not, adjust R30066 on Range #2 PC Board Assembly.
11. Set Oscilloscope sweep speed to 0.2 ms/Div.
12. Verify sync pulse shown on Oscilloscope has 50% (±2.5%) duty cycle. (Positive excursion is same time as negative excursion ±≈1 minor division.) If not, repeat Steps 4 through 12 until all steps pass.
13. Perform INTL Modulation/PRF Counter Verification Procedure (2-2-2F[3]).
14. Disconnect equipment and replace top cover on RD-301A.

(11) Pulse Width (Refer to 2-2-2, Figure 16.)

PREREQUISITES: 2-2-2H(3)

TEST EQUIPMENT:
1 6 dB Pad
1 Heterodyne Monitor
1 L-Band Signal Generator
1 Oscilloscope
1 X-Band to L-Band Down Converter (Refer to Appendix D.)

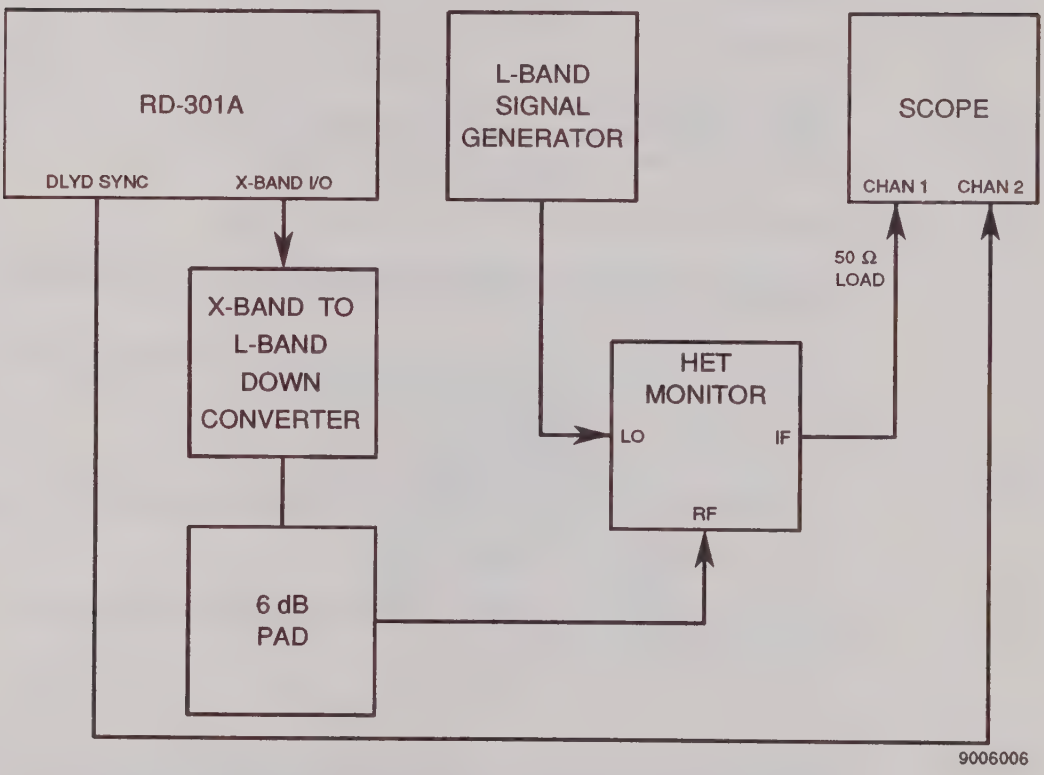

Pulse Width Calibration Setup
Figure 22

STEP PROCEDURE

RANGE #1

1. Set RD-301A as follows:

CONTROL		SETTING
(2)	PRF/RF Switch	***RF***
(4)	OUTPUT LEVEL FINE dBm Control	***0***
(9)	OUTPUT LEVEL COARSE dBm Control	***-50***
(10)	MNL FREQ Controls	***9375.0 MHz***
(16)	RF/IF MODE Pushbutton Switches	***RF MNL***
(29)	MODULATION MODE Pushbutton Switches	***INTL***
(31)	PULSE WIDTH µS Control (RANGE 2)	***.5***
(32)	PULSE WIDTH µS Control (RANGE 1)	***.5***
(34)	PULSE WIDTH MULTIPLIER Control (RANGE 1)	***.1***
(35)	PULSE WIDTH MULTIPLIER Control (RANGE 2)	***.1***
(36)	µS/NM Switch	***µS***
(37)	RANGE 1 DELAY Thumbwheels	***000.3***
(38)	RANGE 2 DELAY Thumbwheels	***900.0***
(39)	RANGE SEL Switch	***RINGS 1***
(42)	X1/X10 INTL PRF/AM Switch	***X10***

2. Apply power to RD-301A and allow for 30 minute stabilization period.

3. Connect test equipment as shown in 2-2-2, Figure 22.

   NOTE: Refer to Appendix D for X-Band to L-Band Down Converter.

4. Refer to 2-2-2H(1), Step 2 and remove top cover from RD-301A.

5. Set L-Band Signal Generator for 1125 MHz CW signal at +5 dBm.

6. Set PRF/RF Switch (2) to ***PRF***.

7. Adjust INTL PRF/AM Control (41) until ***1000 Hz*** is shown on FREQUENCY Hz/MHz Digital Display (1).

8. Set PRF/RF Switch (2) to ***RF***.

9. Set Oscilloscope to trigger on Channel 2 and sweep speed to 10 ns/Div.

10. Verify pulse width is 50 ns (±5 ns). If not, adjust R30022 on RANGE #2 PC Board Assembly.

    NOTE: All pulse widths are measured from 50% amplitude on rising edge to 50% amplitude on falling edge. Refer to 2-2-2, Figure 23.

11. Set PULSE WIDTH MULTIPLIER Control (RANGE 1) (34) to ***1***.

12. Set Oscilloscope sweep speed to 100 ns/Div.

STEP PROCEDURE

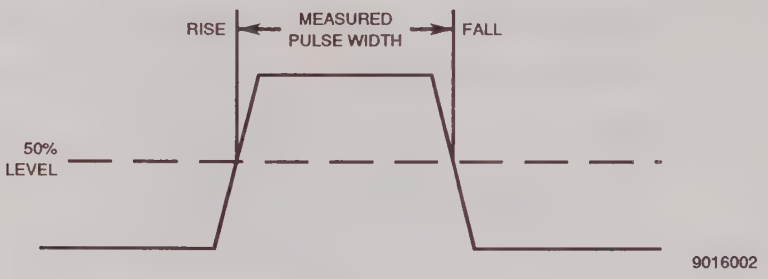

Pulse Width Calibration Measurement Points
Figure 23

13. Verify pulse width is 500 ns (±50 ns). If not, adjust R30021 on RANGE #2 PC Board Assembly.

14. Set PULSE WIDTH MULTIPLIER Control (RANGE 1) (34) to ***100***.

15. Set PRF/RF Switch (2) to ***PRF***.

16. Adjust INTL PRF/AM Control (41) until ***500 Hz*** is shown on FREQUENCY Hz/MHz Digital Display (1).

17. Set PRF/RF Switch (2) to ***RF***.

18. Set Oscilloscope sweep speed to 100 µs/Div.

19. Verify pulse width is 500 µs (±50 µs). If not, adjust R30010 on RANGE #2 PC Board Assembly.

RANGE #2

20. Set RD-301A as follows:

CONTROL		SETTING
(2)	PRF/RF Switch	***PRF.***
(37)	RANGE 1 DELAY Thumbwheels	***000.3***
(38)	RANGE 2 DELAY Thumbwheels	***900.0***
(39)	RANGE SEL Switch	***R2 ON***

21. Adjust INTL PRF/AM Control (41) until ***1000 Hz*** is shown on FREQUENCY Hz/MHz Digital Display (1).

22. Set PRF/RF Switch (2) to ***RF***.

23. Set Oscilloscope sweep speed to 10 ns/Div.

24. Verify pulse width is 50 ns (±5 ns). If not, adjust R30042 on RANGE #2 PC Board Assembly.

25. Set PULSE WIDTH MULTIPLIER Control (RANGE 1) (34) to ***1***.

STEP	PROCEDURE

26. Set Oscilloscope sweep speed to 100 ns/Div.

27. Verify pulse width is 500 ns (±50 ns). If not, adjust R30041 on RANGE #2 PC Board Assembly.

28. Set PULSE WIDTH MULTIPLIER Control (RANGE 2) (35) to ***100***.

29. Set PRF/RF Switch (2) to ***PRF***.

30. Adjust INTL PRF/AM Control (41) until ***500*** (500 Hz) is shown on FREQUENCY Hz/MHz Digital Display (1).

31. Set PRF/RF Switch (2) to ***RF***.

32. Set Oscilloscope sweep speed to 100 µs/Div.

33. Verify pulse width is 500 µs (±50 µs). If not, adjust R30031 on RANGE #2 PC Board Assembly.

34. Disconnect test equipment and replace top cover on RD-301A.

(12) Range Delay (Refer to 2-2-2, Figure 15.)

PREREQUISITES: 2-2-2H(11)

TEST EQUIPMENT:
1 Pulse Generator
1 Oscilloscope
1 X-Band to L-Band Down Converter (Refer to Appendix D.)
1 L-Band Signal Generator

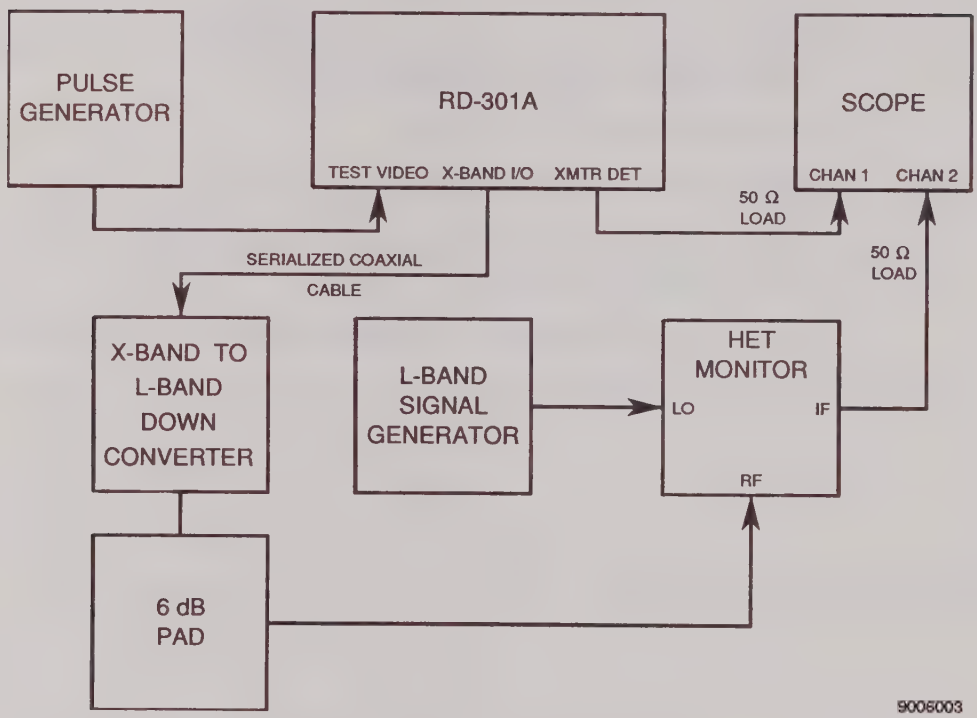

Range Delay Calibration Setup
Figure 24

STEP PROCEDURE

1. Set RD-301A as follows:

CONTROL		SETTING
(2)	PRF/RF Switches	***RF***
(10)	MNL FREQ Controls	***9375.0 MHz***
(16)	RF/IF MODE Pushbutton Switches	***RF MNL***
(29)	MODULATION MODE Pushbutton Switches	***TRACK***
(31)	PULSE WIDTH µS Control (RANGE 2)	***5***
(32)	PULSE WIDTH µS Control (RANGE 1)	***5***
(34)	PULSE WIDTH MULTIPLIER Control (RANGE 1)	***1***
(35)	PULSE WIDTH MULTIPLIER Control (RANGE 2)	***1***
(36)	µS/NM Switch	***µS***
(37)	RANGE 1 DELAY Thumbwheels	***100.0***
(38)	RANGE 2 DELAY Thumbwheels	***000.2***
(39)	RANGE SEL Switch	***RINGS 1***

2. Apply power to RD-301A and allow for 30 minute stabilization period.

3. Refer to 2-2-2H(1) and remove top cover from RD-301A.

4. Connect test equipment as shown in 2-2-2, Figure 24.

5. Set Pulse Generator for 3 µs pulse at TTL level and 1 kHz PRF.

6. Set L-Band Signal Generator for 1125 MHz CW signal at +7 dBm.

   NOTE: Keep RD-301A and L-Band Signal Generator near same L-Band frequency (zero-beat) for minimum distortion.

7. Set Oscilloscope to display both channels.

   NOTE: Insure both Oscilloscope channel delays are calibrated to match.

8. Verify range delay is 0.6 µs (±0.05 µs). If not, adjust R19047 on Range #1 PC Board Assembly.

   NOTE: Measure range delay from leading edge of transmitter pulse through XMTR DET Connector (13) to leading edge of reply pulse through X-Band I/O Connector (18) at 50% amplitude points.

   NOTE: Refer to Appendix D. Subtract fixed delay through X-Band to L-Band Down Converter from RD-301A range delay measurement to obtain actual range delay.

9. Disconnect equipment and replace top cover on RD-301A.

(13) Power Meter (Refer to 2-2-2, Figure 14.)

PREREQUISITES: 2-2-2H(1)

TEST EQUIPMENT:
1 Bandpass Filter
1 Power Meter Assembly (Refer to Appendix D.)
1 TWT Amplifier
1 X-Band Signal Generator

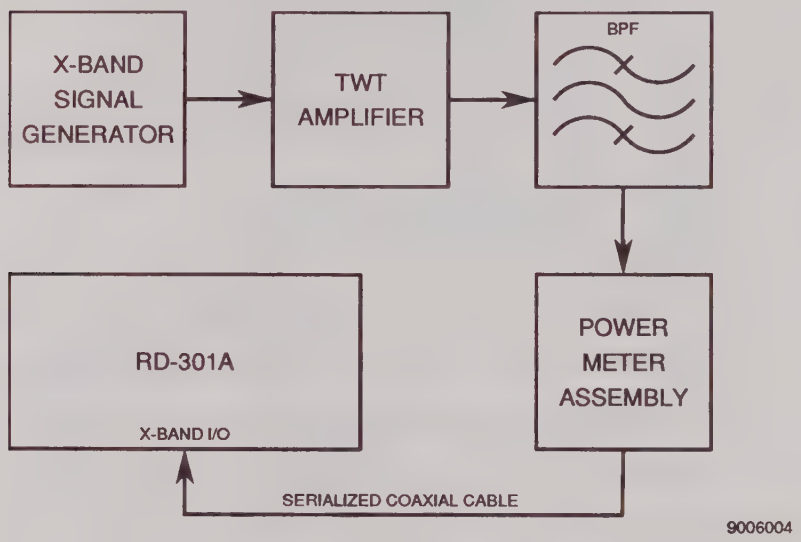

Power Meter Calibration Setup
Figure 25

STEP PROCEDURE

1. Apply power to RD-301A and allow for 30 minute stabilization period.
2. Set TWT Amplifier power On and in Standby mode.
3. Connect test equipment as shown in 2-2-2, Figure 25.
4. Set X-Band Signal Generator as follows:

CONTROL	SETTING
Frequency	9375 MHz
Pulse Width	3 µs
PRF	1 kHz

5. Set METER SELECT Switch (47) to ***PK POWER***.
6. Record coupling value of Waveguide Coupler used with RD-301A.

NOTE: The coupling value is marked (not tagged value) on Waveguide Coupler.

Waveguide Coupler Value	2 kW Test RF Level	10 kW Test RF Level
19.0 dB	25.179 W	125.893 W
19.1 dB	24.605 W	123.027 W
19.2 dB	24.045 W	120.226 W
19.3 dB	23.498 W	117.490 W
19.4 dB	22.973 W	114.815 W
19.5 dB	22.440 W	112.202 W
19.6 dB	21.930 W	109.648 W
19.7 dB	21.430 W	107.152 W
19.8 dB	20.943 W	104.713 W
19.9 dB	20.466 W	102.329 W
20.0 dB	20.000 W	100.000 W
20.1 dB	19.545 W	97.724 W
20.2 dB	19.100 W	95.499 W
20.3 dB	18.665 W	93.325 W
20.4 dB	18.140 W	91.201 W
20.5 dB	17.825 W	89.125 W
20.6 dB	17.419 W	87.096 W
20.7 dB	17.023 W	85.114 W
20.8 dB	16.635 W	83.176 W
20.9 dB	16.257 W	81.283 W
21.0 dB	15.887 W	79.433 W

Test RF Levels for Power Meter Calibration
Table 6

7. Record 2 kW and 10 kW Test RF Levels from 2-2-2, Table 6 according to Waveguide Coupler Value from Step 6.

8. Refer to 2-2-2H(1), Step 2 and remove top cover from RD-301A.

   CAUTION: CONNECTIONS TO TWT AMPLIFIER MUST BE CORRECT BEFORE SWITCHING TO OPERATE MODE.

9. Set TWT Amplifier to Operate mode.

10. Adjust X-Band Signal Generator level until Power Meter Assembly indicates 2 kW Test RF Level from Step 7.

STEP PROCEDURE

11. Verify PANEL Meter (43) indicates ***2 kW*** (±296 W). If not, adjust R17143 on Video PC Board Assembly.

12. Adjust X-Band Signal Generator level until Power Meter Assembly indicates 10 kW Test RF Level from Step 7.

13. Verify PANEL Meter (43) indicates ***10 kW*** (±1480 W). If not, adjust R17128 on Video PC Board Assembly.

14. Repeat Steps 10 through 13 until no adjustments are required.

15. Perform Power Meter Verification Procedure (2-2-2F[5]).

16. Slowly decrease TWT Amplifier power and set to Standby mode for ≥15 minutes.

17. Disconnect test equipment and replace top cover on RD-301A.

(14) Discriminator (Refer to 2-2-2, Figure 15.)

PREREQUISITES: 2-2-2H(11)

TEST EQUIPMENT: 1 Oscilloscope
1 TWT Amplifier
1 X-Band Signal Generator

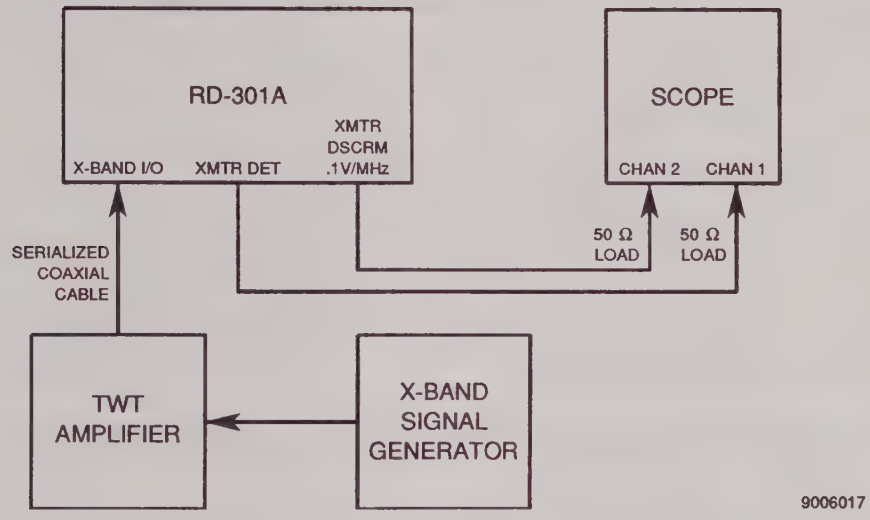

Discriminator Calibration Setup
Figure 26

STEP	PROCEDURE

1. Set RD-301A as follows:

CONTROL		SETTING
(2)	PRF/RF Switch	***RF***
(4)	OUTPUT LEVEL FINE dBm Control	***0***
(9)	OUTPUT LEVEL COARSE dBm Control	***-50***
(16)	RF/IF MODE Pushbutton Switches	***RF TRACK***
(29)	MODULATION MODE Pushbutton Switches	***TRACK***
(47)	METER SELECT Switch	***PK POWER***
(48)	ΔF OFFSET/EFF PEAKING Control	***CAL***

2. Apply power to RD-301A and allow for 30 minute stabilization period.
3. Connect test equipment as shown in 2-2-2, Figure 26.
4. Set TWT Amplifier power On and in Standby mode.
5. Set X-Band Signal Generator for 5 µs wide pulse at 500 Hz PRF.
6. Adjust X-Band Signal Generator frequency for ***9350 MHz*** as shown on FREQUENCY Hz/MHz Digital Display (1).

STEP PROCEDURE

7. Set X-Band Signal Generator output level for ***.5 kW*** as indicated on PANEL Meter (43).

8. Refer to 2-2-2H(1), Step 2 and remove top cover from RD-301A.

   CAUTION: CONNECTIONS TO TWT AMPLIFIER MUST BE CORRECT BEFORE SWITCHING TO OPERATE MODE.

9. Set TWT Amplifier to Operate mode.

   ΔF OFFSET

10. Set METER SELECT Switch (47) to ***ΔF***.

11. Verify PANEL Meter (43) indicates ***0.0 MHz*** offset. If not, adjust R50069 on Discriminator #1 PC Board Assembly.

12. Remove ΔF OFFSET/EFF PEAKING Control (48) from ***CAL*** position and adjust for ***9350 MHz*** frequency as shown on FREQUENCY Hz/MHz Digital Display (1).

13. Verify PANEL Meter (43) indicates ***0.0 MHz*** offset. If not, adjust R50090 on Discriminator #1 PC Board Assembly.

14. If adjustments are made in Step 11 and/or Step 13, repeat Steps 10 through 13 until no adjustments are required.

15. Adjust ΔF OFFSET/EFF PEAKING Control (48) for ***+.5 MHz*** on PANEL Meter (43).

16. Verify FREQUENCY Hz/MHz Digital Display (1) indicates ***9350.50 MHz***. If not, adjust R50077 on Discriminator #1 PC Board Assembly.

17. If adjustment is made in Step 16, repeat Steps 15 and 16 until all indications are correct without adjustments.

18. Repeat Steps 10 through 14.

19. Adjust ΔF OFFSET/EFF PEAKING Control (48) for ***-.5 MHz*** on PANEL Meter (43).

20. Verify FREQUENCY Hz/MHz Digital Display (1) indicates ***9349.50 MHz*** (±0.25 MHz).

21. Adjust ΔF OFFSET/EFF PEAKING Control (48) for ***0.0 MHz*** on PANEL Meter (43).

22. Verify FREQUENCY Hz/MHz Digital Display (1) indicates ***9350.00 MHz*** (±0.25 MHz).

23. Adjust ΔF OFFSET/EFF PEAKING Control (48) for ***+.75 MHz*** on PANEL Meter (43).

STEP PROCEDURE

24. Verify FREQUENCY Hz/MHz Digital Display (1) indicates ***9350.75 MHz*** (±0.25 MHz).

25. Adjust ΔF OFFSET/EFF PEAKING Control (48) for ***-.75 MHz*** on PANEL Meter (43).

26. Verify FREQUENCY Hz/MHz Digital Display (1) indicates ***9349.25 MHz*** (±0.25 MHz).

27. If any step fails, repeat Steps 10 through 26.

28. Set ΔF OFFSET/EFF PEAKING Control (48) to ***CAL***.

29. Set METER SELECT Switch (47) to ***PK POWER***.

XMTR DSCRM .1V/MHz CONNECTOR

30. Set Oscilloscope with both channels dc coupled as follows:

CONTROL	SETTING
Sweep Speed	5 µs/Div
Amplitude Scale (Both Channels)	10 mV/Div
Trigger	Channel 1

31. Adjust X-Band Signal Generator frequency for ***9400 MHz*** as shown on FREQUENCY Hz/MHz Digital Display (1).

32. Set RF/IF MODE Pushbutton Switches (16) to ***RF MNL***.

33. Adjust MNL FREQ Controls (10) for ***9400 MHz*** as shown on FREQUENCY Hz/MHz Digital Display (1). Adjust Oscilloscope and verify XMTR DSCRM .1V/MHz Connector (12) pulse and XMTR DET Connector (13) pulse have same even amplitude.

34. Adjust MNL FREQ Controls (10) for ***9400.50 MHz*** as shown on FREQUENCY Hz/MHz Digital Display (1).

35. Verify XMTR DSCRM .1V/MHz Connector (12) pulse level increases to 50 mV (±5 mV) above XMTR DET Connector (13) pulse level. If not, mark current position of R50182 on Discriminator #1 PC Board Assembly and adjust no more than 1/8th turn. Record correct voltage difference.

    NOTE: If R50182 on Discriminator #1 PC Board Assembly requires more than 1/8th turn of adjustment, Discriminator #1 PC Board Assembly may need module level calibration. Contact IFR Systems, Inc. Customer Service (1-800-835-2350) if assistance is needed.

36. Adjust MNL FREQ Controls (10) for ***9399.50 MHz*** as shown on FREQUENCY Hz/MHz Digital Display (1).

STEP	PROCEDURE

37. Verify XMTR DSCRM .1V/MHz Connector (12) pulse level decreases to 50 mV (±5 mV) below XMTR DET Connector (13) pulse level. If not, repeat Steps 34 through 37 until all levels are within tolerance. Record correct voltage difference.

38. Slowly decrease TWT Amplifier power and set to Standby mode for ≥15 minutes.

39. Disconnect test equipment and replace top cover on RD-301A.

I. Calibration Data Sheet

TECHNICIAN: _____ DATE: _____

RD-301A S/N: _____

STEP		DATA	RESULT
(1)	Power Supply		
	4.	+5 V (+4.7 to +5.3 Vdc)	_____
		+12 V (+11.4 to +12.6 Vdc)	_____
		-12 V (-11.4 to -12.6 Vdc)	_____
		-24 V (-22.0 to -25.2 Vdc)	_____
	5.	+5 V Ripple Voltage ≤15 mV_{P-P}	_____
		+12 V Ripple Voltage ≤15 mV_{P-P}	_____
		-12 V Ripple Voltage ≤15 mV_{P-P}	_____
		-24 V Ripple Voltage ≤20 mV_{P-P}	_____
(2)	100 MHz Clock		
	5.	100 MHz (99.995 to 100.005 MHz)	_____
	7.	8.09133 MHz (8.09123 to 8.09143 MHz)	_____
(3)	8.25 GHz LO		
	7.	103.125 MHz (103.1229 to 103.1271 MHz)	_____
	8.	-10 Vdc (-5 to -15 Vdc)	_____
	10.	Frequency Counter reading	_____
		FREQUENCY Hz/MHz Digital Display (1) readout	_____
		Difference ≤250 kHz	_____ (√)
(4)	RF Display Limits		
	4.	9504 MHz (9503 to 9505 MHz)	_____
	6.	9291 MHz (9290 to 9292 MHz)	_____
(5)	Marker Oscillator		
	12.	≤18.0 MHz	_____
	15.	≥74 MHz	_____
	22.	FREQUENCY Hz/MHz Digital Display (1) readout ≥70 MHz	_____
	25.	FREQUENCY Hz/MHz Digital Display (1) readout ≤20 MHz	_____

STEP	DATA	RESULT
(6) IF Oscillator		
5.	FREQUENCY Hz/MHz Digital Display (1) readout 77 MHz	_____(√)
7.	FREQUENCY Hz/MHz Digital Display (1) readout ≤18 MHz	_____
9.	FREQUENCY Hz/MHz Digital Display (1) readout ≥74 MHz	_____
21.	-18.0 V	_____(√)
22.	77.0 MHz	_____(√)
23.	17.0 MHz	_____(√)
24.	≈-2.0 V	_____(√)
25.	77 MHz	_____(√)
26.	Frequency Range 17.0 to 77.0 MHz	_____(√)
MIXER BALANCE ADJUSTMENT		
33.	Maximum 60 MHz signal with minimum spurious signals	_____(√)
SWEEP WIDTH		
42.	Carrier starts sweeping past ***0*** setting.	_____(√)
44.	4 MHz sweep width	_____(√)
46.	2 MHz sweep width (1.8 to 2.2 MHz)	_____
(7) IF Generator Power Amplifier		
6.	All harmonics and spurious signals ≥30 dB below 30 MHz carrier	_____(√)
10.	30 MHz reference level 0 dBm (-0.2 to +0.2 dBm)	_____
14.	R36023 adjusted to Step 10 reference level.	_____(√)
18.	All harmonics and spurious signals ≥30 dB below 60 MHz carrier	_____(√)
22.	60 MHz reference level 0 dBm (-0.2 to +0.2 dBm)	_____
26.	0 dBm (-2.5 to +2.5 dBm)	_____
27.	30 MHz and 60 MHz signal levels 0 dBm (-2.5 to +2.5 dBm)	_____(√)
(8) External AM		
6.	30% modulation (28% to 32%)	_____

STEP	DATA	RESULT

(9) Levelers

MAIN LEVELER

5.	Computed X-Band Output Power Level (A) RD-301A Output Level Settings (B)	_____
	Waveguide Coupler Value (C)	_____
	Insertion Loss of Bandpass Filter and 3 dB Pads	_____
	B + C + D = A	_____
6.	X-Band Output Power Level upper limit (A + 2 dB)	_____
7.	X-Band Output Power Level lower limit (A - 2 dB)	_____
8.	X-Band Output Power Level from 9295 to 9500 MHz stays between Step 6 and Step 7 limits.	_____ (√)
9	Midpoint amplitude value	_____
12.	Midpoint amplitude value = Step 5 X-Band Output Power Level	_____ (√)
13.	X-Band Output Power Level from 9295 to 9500 MHz stays between Step 6 and Step 7 limits.	_____ (√)

CONTOUR LEVELER - STORAGE SPECTRUM ANALYZER

25.	***-50, 00*** settings Trace A level equals Trace B level (±1 dB).	_____
29.	***-60, 10*** settings Trace A level equals Trace B level (±1 dB).	_____
33.	***-70, 20*** settings Trace A level equals Trace B level (±1 dB).	_____

CONTOUR LEVELER - NON-STORAGE SPECTRUM ANALYZER

35.	***RINGS 1*** and ***CONTOUR/AM UP MOD*** settings have equal levels (±1 dB).	_____
38.	***CONTOUR/AM UP MOD*** setting level is 10 dB above ***RINGS 1*** setting level (9 to 11 dB).	_____
40.	***CONTOUR/AM UP MOD*** setting level is 20 dB above ***RINGS 1*** setting level (9 to 11 dB).	_____

R1/R2 LEVELER - STORAGE SPECTRUM ANALYZER

52.	Trace A level (R2) is 6 dB below Trace B level (R1) (5 to 7 dB).	_____ (√)

R1/R2 LEVELER - NON-STORAGE SPECTRUM ANALYZER

56.	R2 pulse peaks are 6 dB below R1 pulse peaks (5 to 7 dB).	_____ (√)

STEP	DATA	RESULT
(10) Internal PRF		
5.	INTL PRF/AM Control (41) is set to ***50 Hz***.	_____(√)
8.	Sync pulse has 50% (47.5% to 52.5 %) duty cycle.	_____
10	FREQUENCY Hz/MHz Digital Display (1) shows ***500 Hz*** (499 to 501 Hz).	_____
12.	Sync pulse has 50% (47.5% to 52.5 %) duty cycle	_____
13.	RD-301A passes INTL Modification/PRF Counter Verification Procedure (2-2-2F[3]).	_____(√)
(11) Pulse Width		
RANGE 1		
10.	50 ns (45 to 55 ns)	_____
13.	500 ns (450 to 550 ns)	_____
19.	500 µs (450 to 550 µs)	_____
RANGE 2		
24.	50 ns (45 to 55 ns)	_____
27.	500 ns (450 to 550 ns)	_____
33.	500 µs (450 to 550 µs)	_____
(12) Range Delay		
8.	0.6 µs (0.55 to 0.65 µs)	_____
(13) Power Meter		
6.	Waveguide Coupler value	_____
7.	2 kW Test RF Level (2-2-2, Table 6)	_____
	10 kW Test RF Level (2-2-2, Table 6)	_____
11.	PANEL Meter (43) shows ***2 kW*** (1704 to 2296 W).	_____
13.	PANEL Meter (43) shows ***10 kW*** (8.52 to 11.48 kW).	_____
15.	RD-301A passes Power Meter Verification Procedure (2-2-2F[5].	_____(√)

STEP	DATA	RESULT

(14) Discriminator

ΔF OFFSET

11.	***CAL*** position PANEL Meter (43) indicates ***0.0 MHz*** offset.	_____ (√)
13.	Out of ***CAL*** position PANEL Meter (43) indicates ***0.0 MHz*** offset.	_____ (√)
16.	FREQUENCE Hz/MHz Digital Display (1) indicates ***9350.50 MHz***.	_____ (√)
20.	FREQUENCE Hz/MHz Digital Display (1) indicates ***9349.50 MHz*** (9349.25 to 9349.75 MHz).	_____
22.	FREQUENCE Hz/MHz Digital Display (1) indicates ***9350.00 MHz*** (9349.75 to 9350.25 MHz).	_____
24.	FREQUENCE Hz/MHz Digital Display (1) indicates ***9350.75 MHz*** (9350.50 to 9351.00 MHz).	_____
26.	FREQUENCE Hz/MHz Digital Display (1) indicates ***9349.25 MHz*** (9349.00 to 9349.50 MHz).	_____

XMTR DSCRM .1V/MHz CONNECTOR

33.	XMTR DSCRM .1V/MHz Connector (12) and XMTR DET Connector (13) pulses are same level.	_____ (√)
35.	XMTR DSCRM .1V/MHz Connector (12) pulse level is 50 mV above XMTR DET Connector (13) pulse level (45 to 55 mV).	_____
37.	XMTR DSCRM .1V/MHz Connector (12) pulse level is 50 mV below XMTR DET Connector (13) pulse level (45 to 55 mV).	_____

THIS PAGE INTENTIONALLY LEFT BLANK.

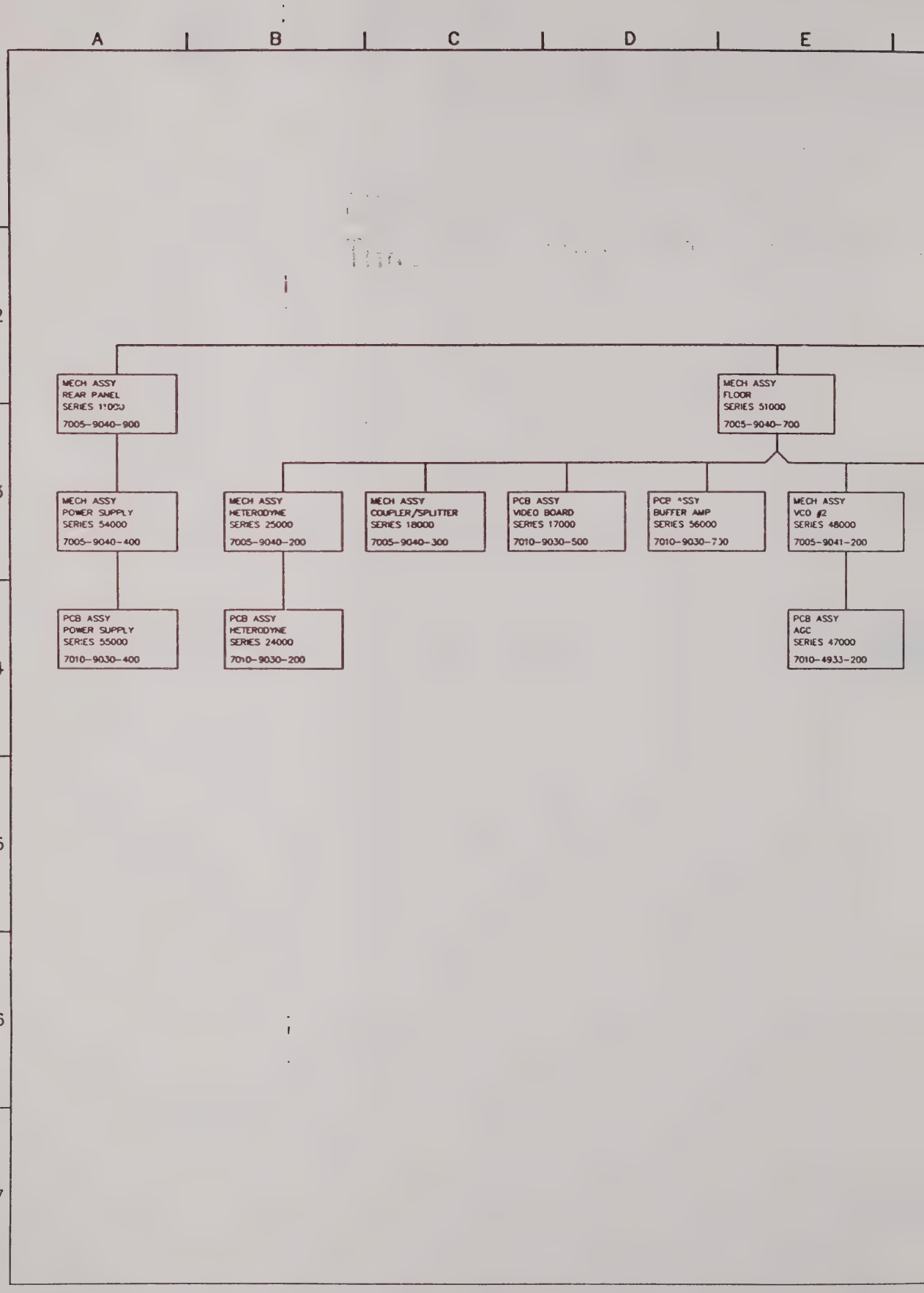
A
B
C
D
E
1
2
3
4
5
6
7
MECH ASSY
REAR PANEL
SERIES 11000
7005-9040-900
MECH ASSY
FLOOR
SERIES 51000
7005-9040-700
MECH ASSY
POWER SUPPLY
SERIES 54000
7005-9040-400
MECH ASSY
HETERODYNE
SERIES 25000
7005-9040-200
MECH ASSY
COUPLER/SPLITTER
SERIES 18000
7005-9040-300
PCB ASSY
VIDEO BOARD
SERIES 17000
7010-9030-500
PCB ASSY
BUFFER AMP
SERIES 56000
7010-9030-700
MECH ASSY
VCO #2
SERIES 48000
7005-9041-200
PCB ASSY
POWER SUPPLY
SERIES 55000
7010-9030-400
PCB ASSY
HETERODYNE
SERIES 24000
7010-9030-200
PCB ASSY
AGC
SERIES 47000
7010-4933-200

F G H J K L

DATE	REV	CHANGE	APPROVED
2-18-92	A	DESIGN RELEASE LJH	SL
4-21-92	A1	INC REF #L123 J.I.M.	SL
9-1-92	A2	INC REF #L143 J.I.M.	SL

SHIPPABLE UNIT
SERIES NONE
9001-9002-000

COMPOSITE ASSY
SERIES 49000
7003-9040-000

PCB ASSY
IF MKR/ OSC
SERIES 33000
7010-4931-400

PCB ASSY
PRESCALER
SERIES 23000
7010-4932-900

MECH ASSY
FRONT PANEL
SERIES 10000
7005-9040-100

PCB ASSY
IF GEN PWR AMP
SERIES 36000
7010-4931-500

CH ASSY
AIN DIODE SWITCH
RIES 37000
05-4940-900

X-BAND FRONT END
PURCHASED
2517-2511-700

8.25GHz OSC.
PURCHASED
5850-8251-600

PCB ASSY
MODULATION MOD.SW.
SERIES 32000
7010-4931-700

PCB ASSY
RF MODE SWITCH
SERIES 27000
7010-4930-700

PCB ASSY
RANGE DISCRETE
SERIES 22000
7010-4930-900

PCB ASSY
RANGE DIGIT
SERIES 15000
7010-4930-800

B ASSY
AIN DIODE SWITCH
RIES 39000
10-4930-000

MECH ASSY
DISPLAY COUNTER
SERIES 14000
7005-9040-800

PCB ASSY
COUNTER GATING
SERIES 31000
7010-2518-000

PCB ASSY
COUNTER DISPLAY
SERIES 26000
7010-2517-800

PCB ASSY
LOGIC COUNTER
SERIES 21000
7010-4931-600

PCB ASSY
200V POWER SUPPLY
SERIES 16000
7010-0815-800

MECH ASSY
CARD FRAME
SERIES 13000
7005-9041-100

PCB ASSY
RANGE BD #1
SERIES 19000
7010-4930-300

PCB ASSY
RANGE BOARD #2
SERIES 30000
7010-4933-100

PCB ASSY
DISCRIMINATOR #2
SERIES 35000
7010-4931-300

PCB ASSY
DISCRIMINATOR #1
SERIES 50000
7010-4932-800

MECH ASSY
475/570-775MHz FILTER
SERIES 53000
7005-4943-000

MECH ASSY
DELAY LINE
SERIES 20000
7005-9041-000

IFR SYSTEMS INC
10200 West York St., Wichita, Kansas 67215

DRAWN R.CHAPMAN	DATE 2-20-91	TITLE PRODUCT STRUCTURE RD-301A
CHECKED S.LEONARD	DATE 2-18-92	
APPROVED P.HARRIS	DATE 2-18-92	SIZE D · DWG NO. 0000-9000-100 · REV A2
SCALE:	DO NOT SCALE	FSCM 51190 · SHEET 1 OF 1

ASSY NO.	REVISION	DESCRIPTION	LAST ECN	DATE INC
9001-9002-000	A	SHIP UNIT,RD-301A		05/21/92

STAT	REF.DES.	QTY	COMP. PART NO.	DESCRIPTION	EFFECTIVE
ACT		1.00	1000-1000-900	CARTON,SHIPPING,NAV-750B	00/00/00
ACT		1.00	1000-1001-400	SM. PIZZA BOX 10 X 10 X 1 1/2	00/00/00
ACT		1.00	1001-2529-200	WAVEGUIDE CONNECTING HARDWARE	00/00/00
ACT		1.00	1002-9001-200	MANUAL, OP, RD-301A	00/00/00
ACT		1.00	1003-0001-500	BINDER,MANUAL,1.5 WIDE	00/00/00
ACT		1.00	1007-0001-000	WARRANTY PACKET,2 YEAR	00/00/00
ACT		1.00	1100-1002-900	ENVELOPE, BUSINESS REPLY	00/00/00
ACT		1.00	2400-7502-600	LABEL,RD-301 ACCESSORY S/N	00/00/00
ACT		1.00	2400-8501-000	LABEL,RECEIVING/UNPACKING	00/00/00
ACT		1.00	4100-7623-600	COUPLER 612-A79 MICROLAB	00/00/00
ACT		1.00	5650-7623-500	TERMINATION WF-0055 MICROLAB	00/00/00
ACT		1.00	6041-0001-000	CABLE ASSY,IEC STR,COR 80-1245	00/00/00
ACT		1.00	6042-0000-012	COAX ASSY,4'TYPE N--N ARMORED	00/00/00
ACT		1.00	7003-9040-000	COMPOSITE ASSY,RD-301A	00/00/00
ACT		1.30	8180-0002-010	URETHANE CTLST	00/00/00
ACT		1.30	8180-0002-020	URETHANE RESIN	00/00/00
ACT		72.00	8181-0001-000	POLY FILM,36" CENTERFOLD WHITE	00/00/00

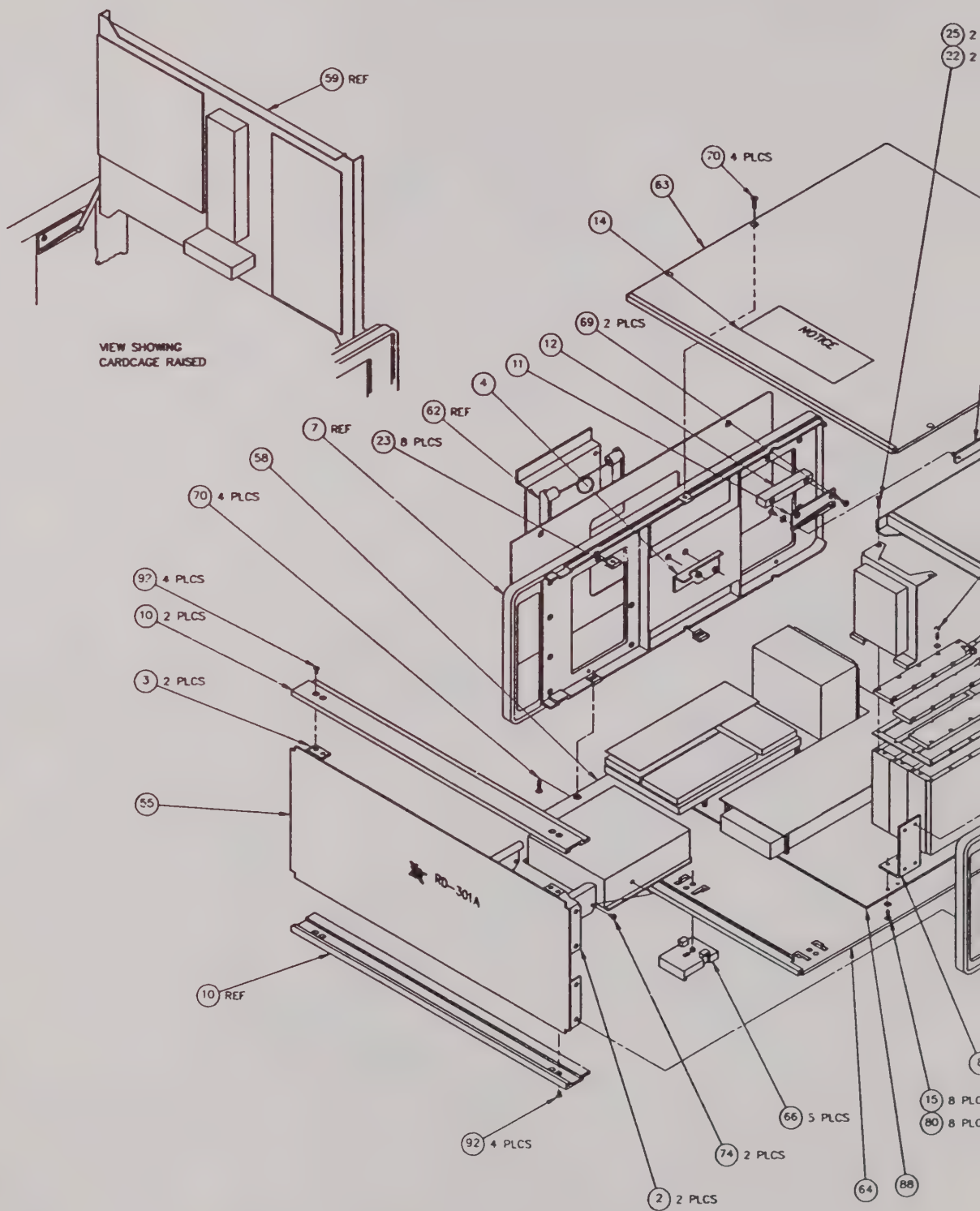
59 REF
VIEW SHOWING
CARDCAGE RAISED
70 4 PLCS
63
14
69 2 PLCS
12
11
4
62 REF
7 REF
23 8 PLCS
58
70 4 PLCS
97 4 PLCS
10 2 PLCS
3 2 PLCS
55
RD-301A
10 REF
92 4 PLCS
74 2 PLCS
2 2 PLCS
66 5 PLCS
64
88
15 8 PLC
80 8 PLC
25 2
22 2
NOTICE

F G H J K L

DATE	REV	CHANGE	APVD
8/6/92	A	DESIGN RELEASE	SL

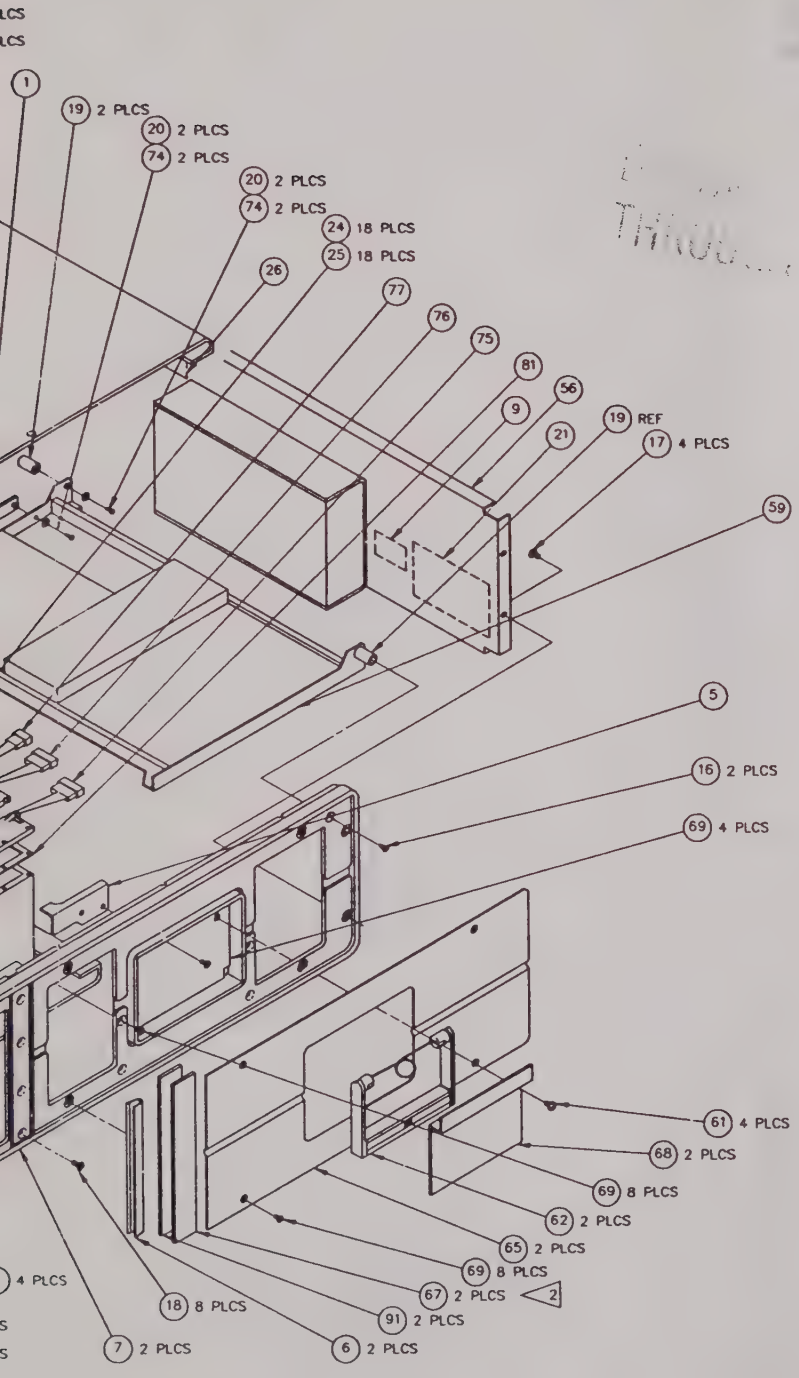

NOTES:

1. ALL REFERENCE DESIGNATORS CARRY AN ASSIGNED DESIGNATOR SERIES. THIS DRAWING CARRIES SERIES 49000.
2. MOUNT ITEM 67, DECAL TRIM STRIP, TO ITEM 7, SIDE FRAME, WITH ITEM 91, VINYL FOAM TAPE.
3. REF INTERCONNECT 0000-9040-000.

	IFR SYSTEMS INC
DRAWN A. OSBURN 4-30-92	TITLE COMPOSITE ASSEMBLY RD301A
CHECKED S. McELROY 8-11-92	
APPROVED P. R. HARRIS 8-17-92	SIZE D · DWG. NO. 7003-9040-000 · REV A
	SCALE NONE · DO NOT SCALE · CAGE 51190 · SHEET 1 OF 2

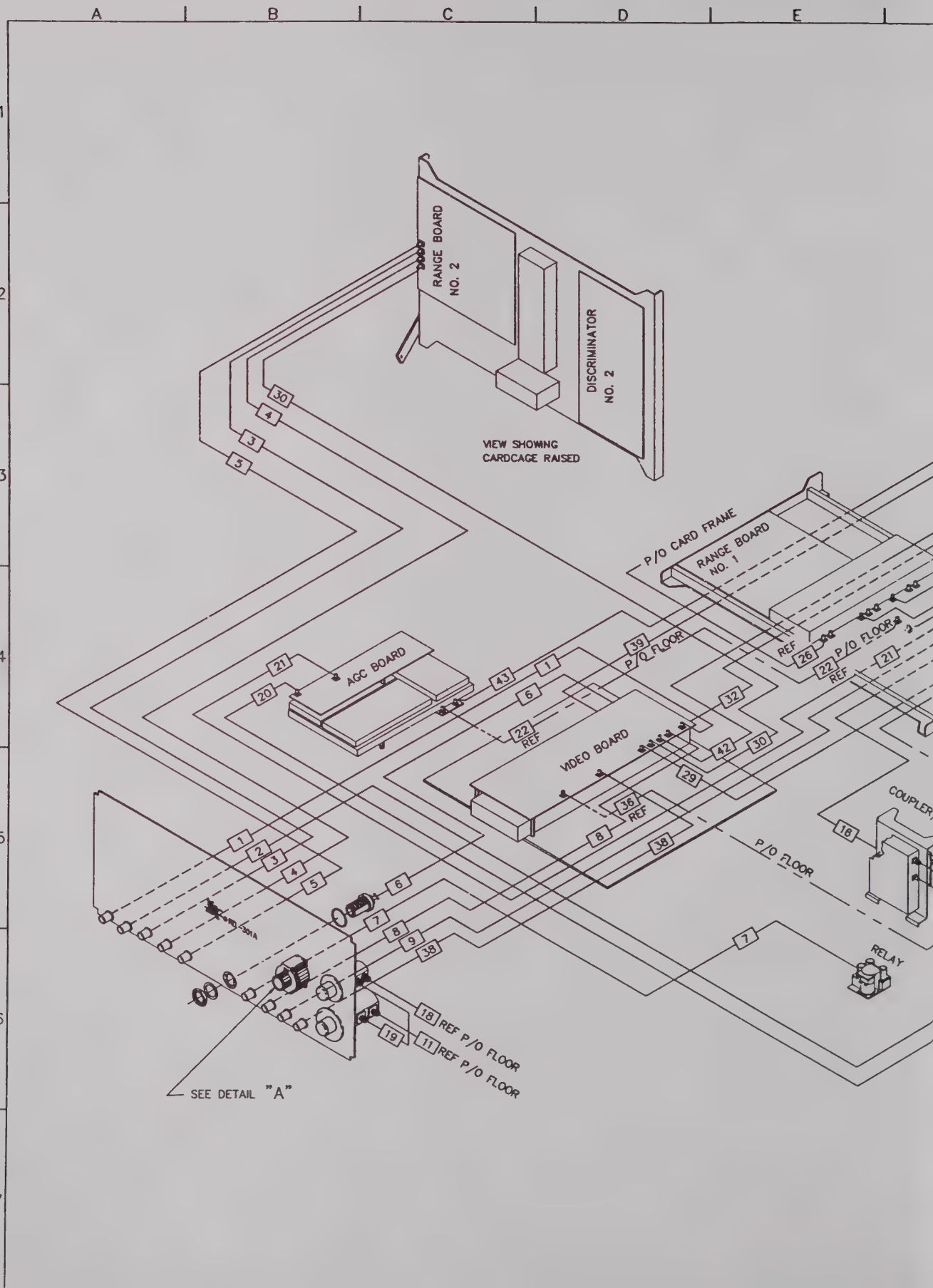
A
B
C
D
E
1
2
3
4
5
6
7
RANGE BOARD NO. 2
DISCRIMINATOR NO. 2
VIEW SHOWING CARDCAGE RAISED
P/O CARD FRAME
RANGE BOARD NO. 1
AGC BOARD
VIDEO BOARD
P/O FLOOR
REF
COUPLER
RELAY
SEE DETAIL "A"
18 REF P/O FLOOR
11 REF P/O FLOOR

F | G | H | J | K | L

DATE	REV	CHANGE	APVD
		FOR REV SEE SHEET 1	

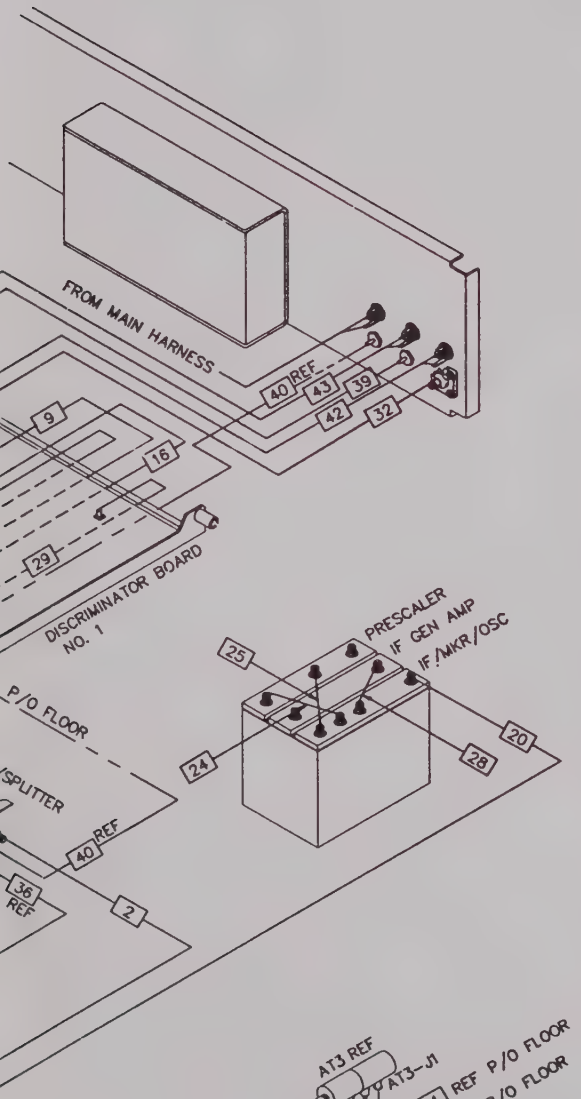

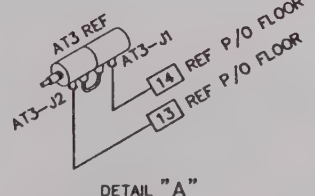

DETAIL "A"
SCALE: NONE

COAX RUNNING LIST

COAX TAG	FROM ASSEMBLY	FROM CONNECTOR	TO ASSEMBLY	TO CONNECTOR	D/P/N
1 CKIT	FRONT PANEL (TEST VIDEO)	J10007	VIDEO BOARD	J17001	6050-0062-220
2 CKIT	FRONT PANEL (TEST RF)	J10008	COUPLER/SPLIT.	J18002	6050-0942-100
3 CKIT	FRONT PANEL (SYNC)	J10009	RANGE BD. #2	J30008	6050-0062-450
4 CKIT	FRONT PANEL (DELAYED SYNC)	J10010	RANGE BD. #2	J30004	6050-0062-400
5 CKIT	FRONT PANEL (EXT TRIG)	J10011	RANGE BD. #2	J30007	6050--0062-400
6 COMP	FRONT PANEL (120 W IN)	J10016	X-BAND	J41024	6042-9080-700
7 CKIT	FRONT PANEL (IF OUT)	J10013	RELAY/NO	K1-J2	6050-0091-050
8 CKIT	FRONT PANEL (DET)	J10014	VIDEO BOARD	J17004	6050-0061-100
9 CKIT	FRONT PANEL (.01V/MHz)	J10015	DISCRIMINATOR	J50016	6050-0062-220
16 CKIT	COUPLER/SPLIT.	J18003	DISCRIMINATOR	J50009	6050-0562-100
19 COMP	AT10002	AT2-J1	AT10001	AT1-J1	6042-4982-200
20 CKIT	AGC BD.	J47003	IF/MKR/OSC	J33001	6050-0562-750
21 CKIT	AGC BD.	J47004	DISCRIM #1	J50005	6050-0043-200
24 CKIT	PRESCALER	J23004	IF OSC	J33005	6050-0930-375
25 CKIT	IF OSC	J33004	PRESCALER	J23003	6050-0930-300
28 CKIT	IF GEN	J36002	IF OSC	J33002	6050-0930-275
29 CKIT	VIDEO BOARD	J17005	DISCRIM #1	J50001	6050-0041-420
30 CKIT	VIDEO BOARD	J17006	RANGE BD. #2	J30005	6050-0042-020
32 COMP	X-BAND	J41023	REAR PANEL (ANAL RF)	J11003	6042-9080-300
38 CKIT	FRONT PANEL (HET MON)	J10018	VIDEO BOARD	J17009	6050-0061-345
39 COMP	X-BAND	J41025	REAR PANEL (AUX)	J49002	6042-9080-600
42 CKIT	VIDEO BOARD	J17007	REAR PANEL (50% VIDEO)	E11003 GL11003	6050-1091-000
43 CKIT	VCO (FM/TUNE)	J48012	REAR PANEL (FM)	E11002 GL11002	6050-1091-450

DRAWN A. OSBURN 4-30-92	IFR SYSTEMS INC	
CHECKED S. McELROY 8-11-92	TITLE COMPOSITE ASSEMBLY RD301A	
APPROVED P. R. HARRIS 8-17-92	SIZE D	DWG. NO. 7003-9040-000 REV A
	SCALE 1=1	DO NOT SCALE SIZE 51190 SHEET 2 OF 2

ASSY NO.	REVISION	DESCRIPTION	LAST ECN	DATE INC
7003-9040-000	A	COMPOSITE ASSY,RD-301A		10/30/71

STAT	REF.DES.	QTY	COMP. PART NO.	DESCRIPTION		EFFECTIVE
ACT		1.00	1100-1005-100	EQUIPMENT HISTORY FOLDER		00/00/00
ACT	*01	1.00	1400-4953-300	BRACKET,LATCH GUIDE		00/00/00
ACT	*02	2.00	1400-4980-100	BRKT,LEFT FRONT PANEL MOUNTING		00/00/00
ACT	*03	2.00	1400-4980-101	BRKT,RIGHT FRONT PANEL MOUNT		00/00/00
ACT	*04	1.00	1400-4985-300	BRKT,SUPT,CARD FRAME,RIGHT		00/00/00
ACT	*05	1.00	1400-4985-301	BRKT,SUPT,CARD FRAME,LEFT		00/00/00
ACT	*06	2.00	1407-7632-700	HANDLE EXTRUSION		00/00/00
ACT	*07	2.00	1415-7627-500	SIDE FRAME		00/00/00
ACT	*08	4.00	1421-1424-201	FOOT MOUNTING	2	00/00/00
ACT	*09	1.00	2400-7502-200	LABEL,MODEL NO/SERIAL NO/INPUT		00/00/00
ACT	*10	2.00	2410-4950-200	BAR,TRIM,FRONT PANEL		00/00/00
ACT	*11	1.00	2506-4953-400	PLATE,CARD RACK LATCH GUIDE		00/00/00
ACT	*12	1.00	2800-4954-200	SPACER,LATCH CARD FRAME		00/00/00
ACT	*13	2.00	2803-0188-006	SCREW,4-40 X 3/16 PPHM		00/00/00
ACT	*14	1.00	2400-7502-800	LABEL ACCESSORIES		00/00/00
ACT	*15	28.00	2804-0375-006	SCREW,6-32 X 3/8 PPHM		00/00/00
ACT	*16	14.00	2804-0313-003	SCREW 6-32 X 5/16 PFHMS		00/00/00
ACT	*17	4.00	2805-0250-006	SCREW,8-32X1/4,PPHMSSS		00/00/00
ACT	*18	8.00	2805-0375-003	SCREW 8-32 X 3/8 PFHMS		00/00/00
ACT	*19	2.00	2832-2504-800	HINGE PIVOT	1	00/00/00
ACT	*20	4.00	2840-0000-008	WASHER,FLAT,4,AN960-C4		00/00/00
ACT	*21	1.00	2403-9051-500	OVERLAY,REAR PNL RD-301A		00/00/00
ACT	*23	8.00	2850-0000-001	SPEED NUT TIMMERMAN C11351632		00/00/00
ACT	*32	1.00	6042-4982-200	COAX ASSY,SR.086,ATTEN*ATTEN		00/00/00
ACT	*38	1.00	6045-4981-200	RBN CA ASSY,RANGE--DIGIT SW		00/00/00
ACT	*39	1.00	6045-4981-300	RBN CA ASSY,RANGE--DISCRETE SW		00/00/00

ASSY NO.	REVISION	DESCRIPTION	LAST ECN	DATE INC
7003-9040-000	A	COMPOSITE ASSY,RD-301A		10/30/71

STAT	REF.DES.	QTY	COMP. PART NO.	DESCRIPTION		EFFECTIVE
ACT	*55	1.00	7005-9040-100	MECH ASSY, FRONT PANEL		00/00/00
ACT	*56	1.00	7005-9040-900	MECH ASSY,REAR PANEL		00/00/00
ACT	*58	1.00	7005-9040-800	MECH ASSY,DISPLAY COUNTER		00/00/00
ACT	*59	1.00	7005-9041-100	MECH ASSY, CARD FRAME		00/00/00
ACT	*61	4.00	2805-0375-006	SCREW 8-32X3/8 PHIL BIND HD		00/00/00
ACT	*62	2.00	1407-7632-400	HANDLE ASSY	2	00/00/00
ACT	*63	1.00	1414-7606-501	COVER,TOP		87/02/19
ACT	*64	1.00	1414-7606-601	COVER,BOTTOM,7IN RACK MNT CASE		87/02/19
ACT	*65	2.00	1414-7612-101	SIDE COVER		87/02/19
ACT	*66	5.00	1421-7630-200	FOOT ASSY	2 *ASY	00/00/00
ACT	*67	2.00	2400-7607-001	DECAL TRIM STRIP		87/02/19
ACT	*68	2.00	2506-7606-900	PLATE,HANDLE MTG,PAINTED		00/00/00
ACT	*69	24.00	2804-0250-003	SCREW 6-32X1/4 PFHMS		00/00/00
ACT	*70	8.00	2804-0500-003	SCREW,6-32 X 1/2 PFHM		00/00/00
ACT	*74	6.00	2803-0250-006	SCREW,4-40 X 1/4 PPHM		00/00/00
ACT	*75	1.00	7010-4931-400	PCB ASSY,IF MKR/OSC,RD-301		00/00/00
ACT	*76	1.00	7010-4931-500	PCB ASSY,IF GEN PWR AMP,RD-301		00/00/00
ACT	*77	1.00	7010-4932-900	PCB ASSY,RD-301 PRESCALER		89/07/27
ACT	*79	1.00	5650-0010-200	TERMINATION,M SMA,50 OHM,1.15		00/00/00
ACT	*80	8.00	2840-0000-001	WASHER,LOCK,INT TOOTH,6		00/00/00
ACT	*81	1.00	2525-4952-000	GASKET,RF,FLOOR MODULES		00/00/00
ACT	*88	1.00	7005-9040-700	MECH ASSY,FLOOR		00/00/00
ACT	*89	1.00	7009-9040-000	COAX KIT, RD-301A COMPOSITE		00/00/00
ACT	*90	1.00	2840-7600-214	WASHER,ALUM,.870D,.6301D,.030T		00/00/00
ACT	*91	.00	1050-0000-170	TAPE, VINYL FOAM 3/4" 2-SIDED		00/00/00
ACT	*92	8.00	2803-0250-003	SCREW,4-40 X 1/4 PFHM		00/00/00

ASSY NO.	REVISION	DESCRIPTION	LAST ECN	DATE INC
7003-9040-000	A	COMPOSITE ASSY,RD-301A		10/30/71

STAT	REF.DES.	QTY	COMP. PART NO.	DESCRIPTION	EFFECTIVE
ACT	TAG#06	1.00	6042-9080-700	COAX ASSY,SR.141 X-BAND-F1.PNL	00/00/00
ACT	TAG#32	1.00	6042-9080-300	COAX ASSY,SR.086 X-BAND-R PNL	00/00/00
ACT	TAG#39	1.00	6042-9080-600	COAX ASSY,SR.086 XBND-RPNL AUX	00/00/00

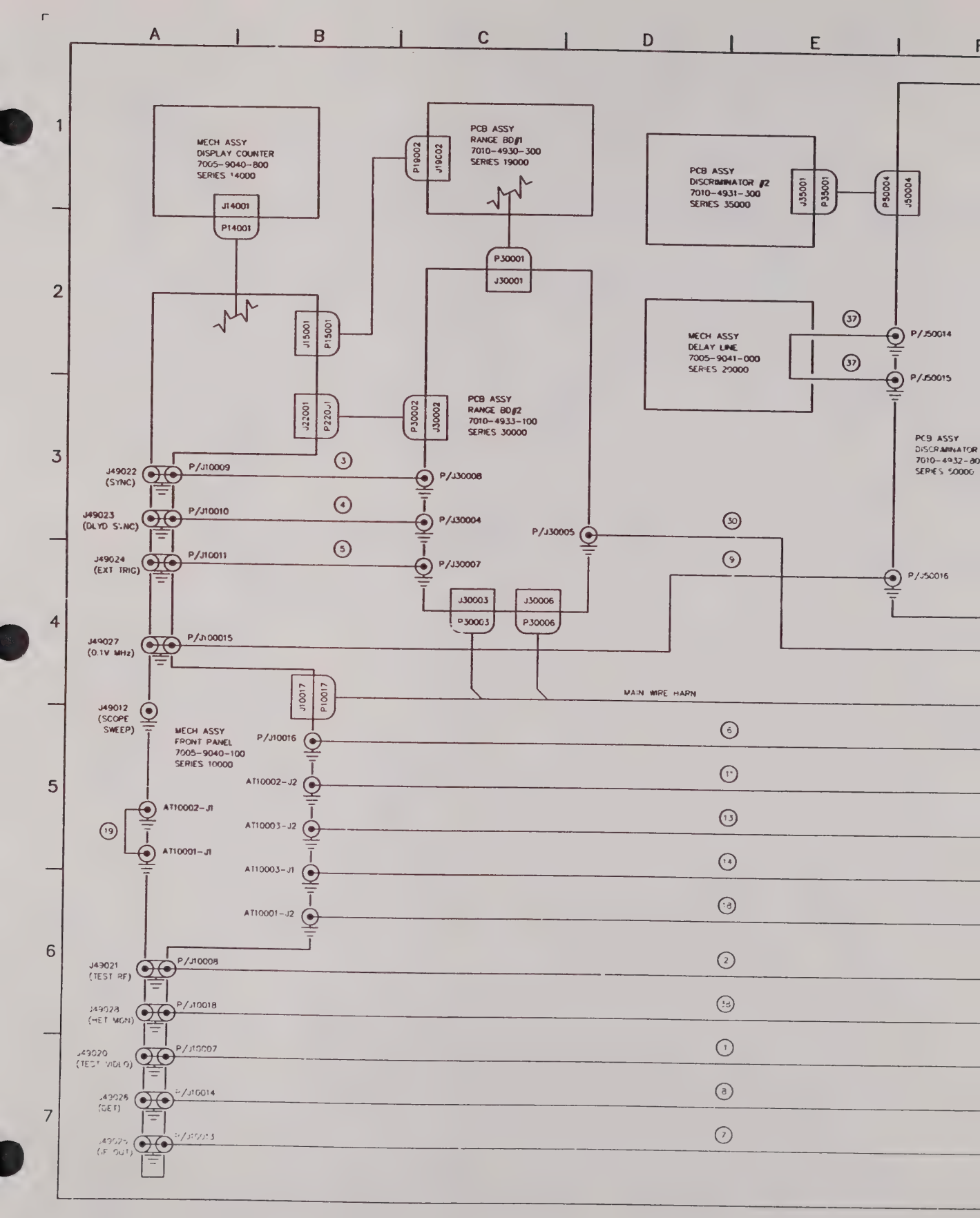
A
B
C
D
E
1
2
3
4
5
6
7
MECH ASSY
DISPLAY COUNTER
7005-9040-800
SERIES 14000
J14001
P14001
PCB ASSY
RANGE BD#1
7010-4930-300
SERIES 19000
P19002
J19002
PCB ASSY
DISCRIMINATOR #2
7010-4931-300
SERIES 35000
J35001
P35001
P30004
J30004
P30001
J30001
MECH ASSY
DELAY LINE
7005-9041-000
SERIES 20000
37
37
P/J50014
P/J50015
J15001
P15001
J22001
P220-J1
P30002
J30002
PCB ASSY
RANGE BD#2
7010-4933-100
SERIES 30000
PCB ASSY
DISCRIMINATOR
7010-4932-80
SERIES 50000
J49022
(SYNC)
P/J10009
3
P/J30008
J49023
(DLYD SYNC)
P/J10010
4
P/J30004
P/J30005
30
J49024
(EXT TRIG)
P/J10011
5
P/J30007
9
P/J50016
J30003
P30003
J30006
P30006
J49027
(0.1V MHz)
P/J10015
J10017
P10017
MAIN WIRE HARN
J49012
(SCOPE
SWEEP)
MECH ASSY
FRONT PANEL
7005-9040-100
SERIES 10000
P/J10016
6
AT10002-J2
11
AT10002-J1
19
AT10003-J2
13
AT10001-J1
AT10003-J1
14
AT10001-J2
18
J49021
(TEST RF)
P/J10008
2
J49028
(MET MON)
P/J10018
12
J49029
(TEST VIDEO)
P/J10007
1
J49026
(DET)
P/J10014
8
J49025
(IF OUT)
P/J10013
7

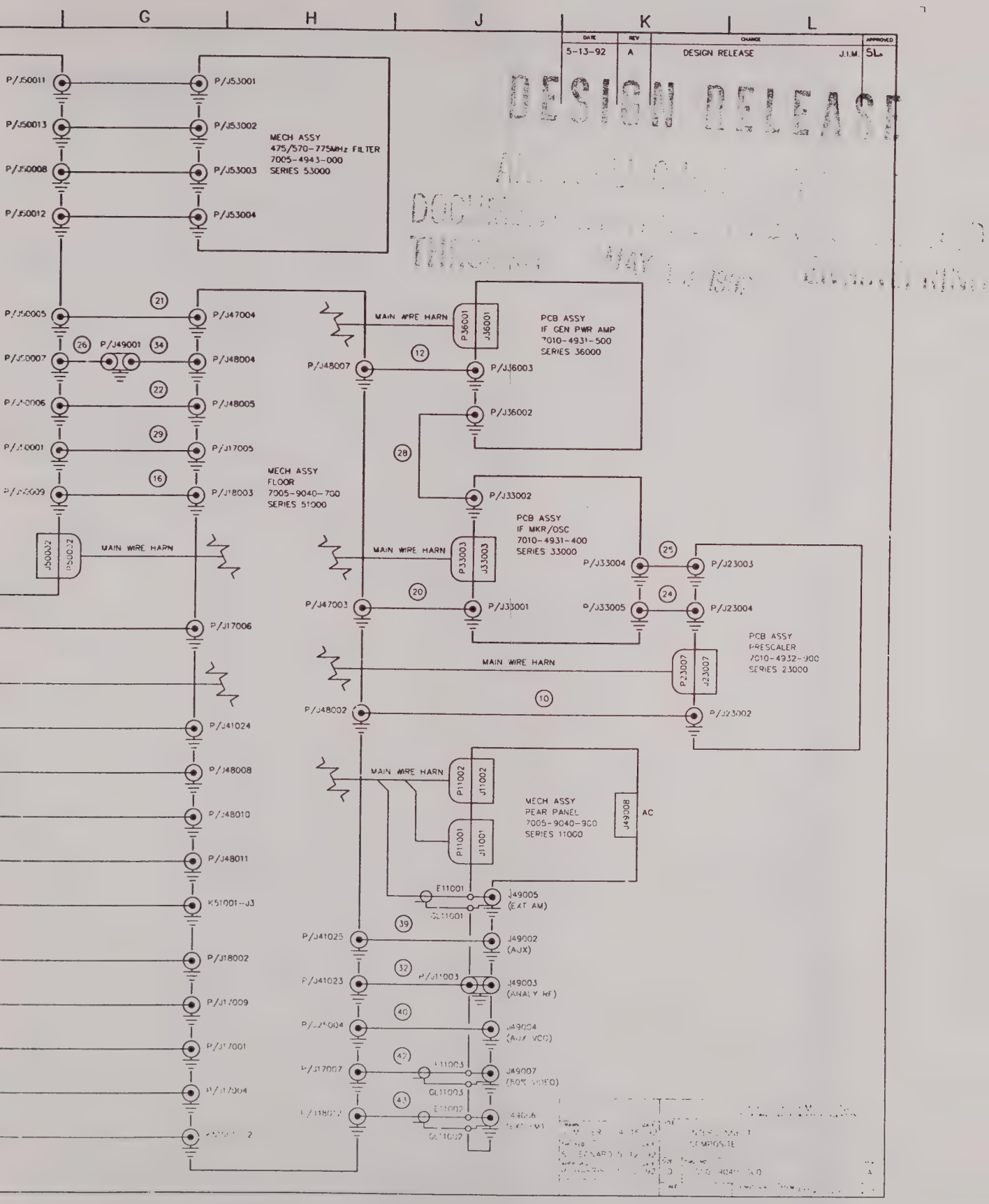

G
H
J
K
L
DATE
REV
CHANGE
APPROVED
5-13-92
A
DESIGN RELEASE
J.I.M.
SL
DESIGN RELEASE
P/J50011
P/J50013
P/J50008
P/J50012
P/J53001
P/J53002
P/J53003
P/J53004
MECH ASSY
475/570-775MHz FILTER
7005-4943-000
SERIES 53000
P/J50005
P/J50007
P/J50006
P/J50001
P/J50009
P/J49001
P/J47004
P/J48004
P/J48005
P/J17005
P/J18003
MECH ASSY
FLOOR
7005-9040-700
SERIES 51000
J50032
P50032
MAIN WIRE HARN
P/J17006
P/J41024
P/J48008
P/J48010
P/J48011
K51001-J3
P/J18002
P/J17009
P/J17001
P/J17004
MAIN WIRE HARN
P36001
J36001
PCB ASSY
IF GEN PWR AMP
7010-4931-500
SERIES 36000
P/J48007
P/J36003
P/J36002
P/J33002
PCB ASSY
IF MKR/OSC
7010-4931-400
SERIES 33000
P33003
J33003
P/J33004
P/J23003
P/J47003
P/J33001
P/J33005
P/J23004
PCB ASSY
PRESCALER
7010-4932-900
SERIES 23000
P23007
J23007
P/J48002
P/J23002
P11002
J11002
P11001
J11001
MECH ASSY
REAR PANEL
7005-9040-900
SERIES 11000
J49008
AC
E11001
GL11001
J49005
(EXT AM)
P/J41025
J49002
(AUX)
P/J41023
P/J11003
J49003
(ANALY RF)
P/J25004
J49004
(AUX VCO)
P/J17007
E11003
GL11003
J49007
(50% VIDEO)
E11002
GL11002
21
26
34
22
29
16
12
28
25
24
20
10
39
32
40
42
43

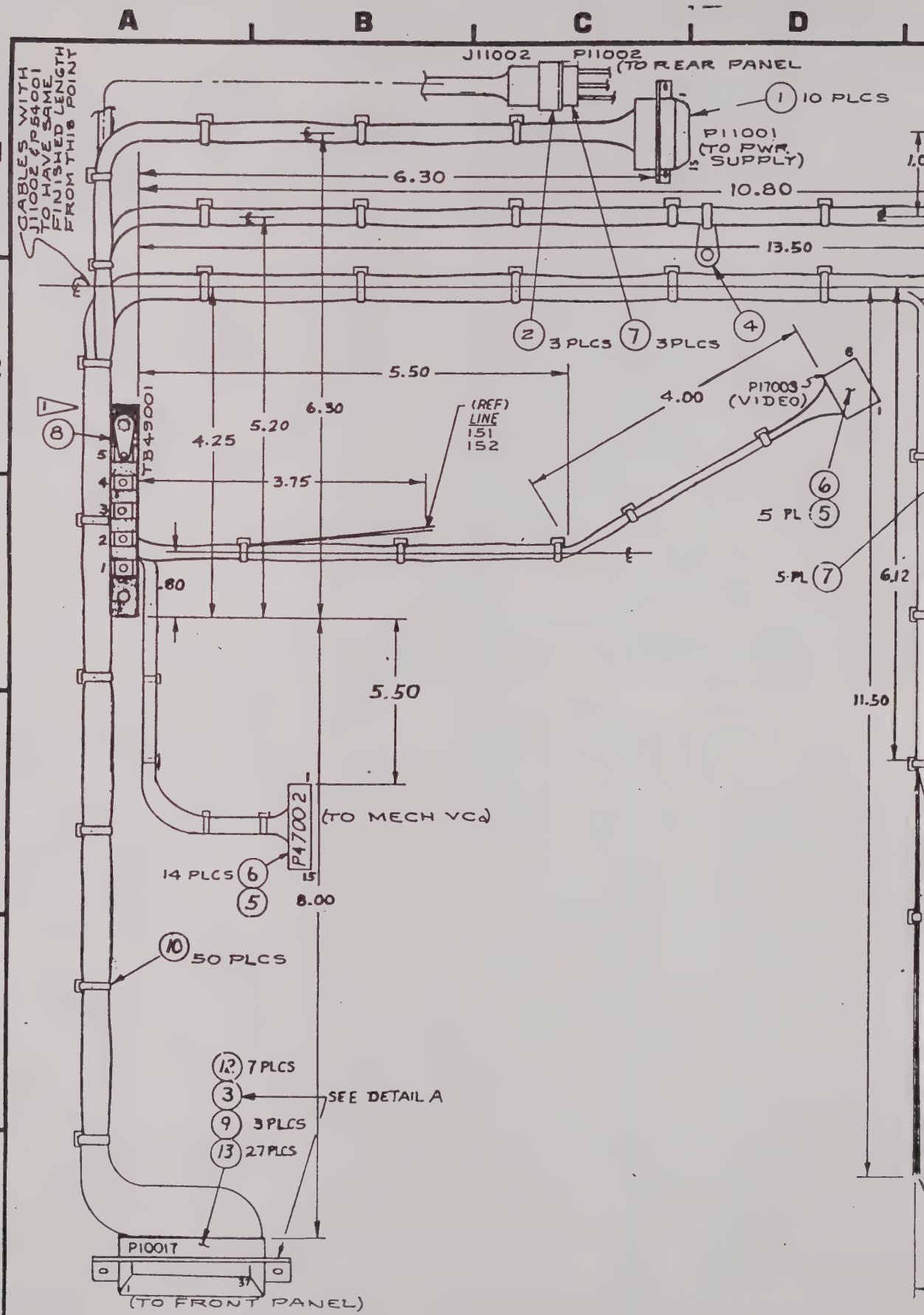
A
B
C
D
1
2
3
4
5
6
J11002
P11002
(TO REAR PANEL)
1 10 PLCS
P11001
(TO PWR. SUPPLY)
CABLES WITH J11002 & P64001 TO HAVE SAME FINISHED LENGTH FROM THIS POINT
6.30
10.80
13.50
2 3 PLCS
7 3 PLCS
4
5.50
4.00
P17003
(VIDEO)
6
5 PL 5
5 PL 7
6.12
11.50
8
TB49001
5.20
6.30
4.25
3.75
(REF) LINE 151 152
.80
5.50
P47002
(TO MECH VCQ)
14 PLCS 6
5
8.00
10 50 PLCS
12 7 PLCS
3
SEE DETAIL A
9 3 PLCS
13 27 PLCS
P10017
(TO FRONT PANEL)

E F G H

DATE	REV	CHANGE	APP'D
2-3-92	A	DESIGN RELEASE	AO SL
2-27-92	A-1	INC REF L112	AO SL
4-6-92	A-2	INC REF L124	AO SL
8-13-92	A-3	INC REF L141	AO SL
9-3-92	A-4	INC REF L143	AO SL

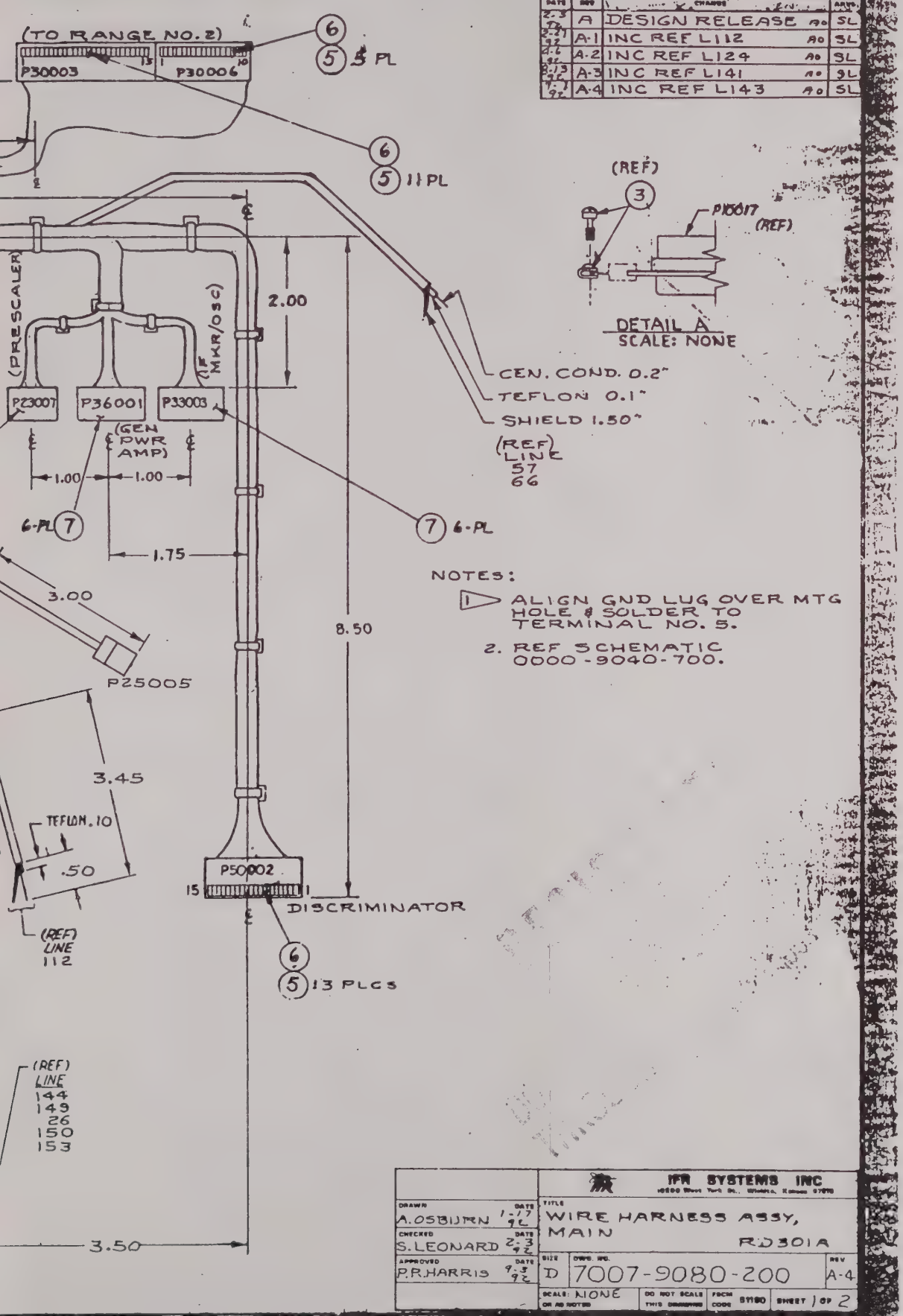

	IFR SYSTEMS INC	
DRAWN A. OSBURN 1-17-92	TITLE WIRE HARNESS ASSY, MAIN RD301A	
CHECKED S. LEONARD 2-3-92		
APPROVED P.R. HARRIS 9-3-92	SIZE D DWG. NO. 7007-9080-200	REV A-4
	SCALE: NONE OR AS NOTED; DO NOT SCALE THIS DRAWING; FSCM CODE 81180	SHEET 1 OF 2

WIRE RUNNING LIST

PART NO.7007-9080-200

SHT 8 OF 8

** COAX SHIELDS FIRST JOINED W/2" OF BLK 26 AWG WIRE.
NOTE:COVER COAX CONNECTIONS W/HEATSHRINK TUBING A/R.
* REPEAT

LINE	FROM		TO		WIRE			
NO.	TERMINAL	NOTES	TERMINAL	NOTES	COLOR	AWG	LG	NOTES
146	P11002-1		F49001-G		GRAY	22	5.0"	
147	-2		N/C					
148	-3		J49008-G		GRN	22	5.0"	
149	-4		N/C					
150	-5		J49008-M		WHT	22	5.0"	
151	FL420011	-24V	TB49001-1		VIO	26	5.0"	
152	GL42001	GND	TB49001-5		BLK	26	5.0"	
153	FL37001	+12V	TB49001-2		RED	26	23.5"	
154	TB49001-2	+12V	P25005-1		RED	26	20.5"	
155	TB49001-5	GND	P25005-2		BLK	26	19.5"	

WIRE RUNNING LIST

PART NO.7007-9080-200

SHT 7 OF 8

** COAX SHIELDS FIRST JOINED W/2" OF BLK 26 AWG WIRE.
NOTE:COVER COAX SHIELD CONNECTIONS W/HEATSHRINK TUBING A/R.
* REPEAT

LINE	FROM		TO		WIRE			
NO.	TERMINAL	NOTES	TERMINAL	NOTES	COLOR	AWG	LG	NOTES
122	P30006-7		P10017-35	*				
123	-8		P10017-33	*				
124	-9		P10017-36	*				
125	-10		P10017-34	*				
126	P11001-1		J11002-5		WHT	22	15.0"	
127	-2		P10017-2	*				
128	-3		J11002-3		GRN	22	15.0"	
129	-4	GND	TB49001-5		BLK	20	12.0"	
130	-5	GND	TB49001-5		BLK	20	12.0"	
131	-6	+12V	TB49001-2		RED	20	13.0"	
132	-7	+5V	TB49001-3		ORN	20	13.0"	
133	-8		NC					
134	-9	-24V	TB49001-1		VIO	20	13.0"	
135	-10	+5V	TB49001-3		ORN	20	13.0"	
136	-11	-12V	TB49001-4		YEL	20	11.5"	
137	-12		NC					
138	J11002-1		P10017-1	*				
139	-2		NC					
140	-3		P11001-3	*				
141	-4		NC					
142	-5		P11001-1	*				
143	K51001-E1		P10017-26	*				
144	K51001-E2	GND	TB49001-5		BLK	22	25.0"	
145	E37001		P30003-13	*				

WIRE RUNING LIST

PART NO.7007-9080-200

SHT. 4 OF 8

** COAX SHIELDS FIRST JOINED W/2" OF BLK 26 AWG WIRE.
NOTE:COVER COAX SHIELD CONNECTORS W/HEATSHRINK TUBING A/R.
* REPEAT

LINE	FROM		TO		WIRE			
NO.	TERMINAL	NOTES	TERMINAL	NOTES	COLOR	AWG	LG	NOTES
50	P50002-13	GND	TB49001-5		BLK	22	25.0"	
51	-14		P10017-15	*				
52	-15	+12V	TB49001-2		RED	22	25.5"	
53	P47002-1		NC					
54	-2		P30003-11		WHT/BLK	26	32.0"	
55	-3		P10017-16	*				
56	-4		P30003-7		WHT/BLU	26	31.0"	
57	-5		E11001	R PNL	RG178		30.0"	
58	-6	-12V	TB49001-4		YEL	26	15.0"	
59	-7	-24V	TB49001-1		VIO	26	15.0"	
60	-8	+12V	TB49001-2		RED	26	15.0"	
61	-9		P10017-18		*			
62	-10		KEY					
63	-11	GND	P47002-12	(2)	BLK	26	4.0"	
64	-12	(2)	TB49001-5		BLK	26	14.0"	
65	-13		NC					
66	-14	GND	COAX SHLD OF LINE 57	GL1 R PNL				
67	-15		NC					
68	P17003-1		P10017-19	*				
69	-2	GND	TB49001-5		BLK	22	12.0"	
70	-3	+12V	TB49001-2		RED	26	11.0"	
71	-4		KEY					
72	-5	-12V	TB49001-4		YEL	26	11.0"	
73	-6	+5V	TB49001-3		ORN	26	11.0"	

WIRE RUNNING LIST

PART NO.7007-9080-200

SHT 3 OF 8

** COAX SHIELDS FIRST JOINED W/2" OF BLK 26 AWG WIRE.
NOTE:COVER COAX SHIELD CONNECTIONS W/HEATSHRINK TUBING A/R.
* REPEAT

LINE	FROM		TO		WIRE			
NO.	TERMINAL	NOTES	TERMINAL	NOTES	COLOR	AWG	LG	NOTES
26	P10017-26		K51001-E1		WHT/ORN	26	34.0"	
27	-27		P23007-4		RG178		29.0"	
28	-28	GND	SHLD OF COAX LINE #27 & 29	**	BLK	26	2.0"	
29	-29		P23007-5		RG178		29.0"	
30	-30		P30003-10		WHT/BRN	26	27.0"	
31	-31	PRF	P30003-8		WHT	26	27.0"	
32	-32	CW	P30006-6		WHT/BLK	26	29.0"	
33	-33		P30006-8		BRN	26	29.0"	
34	-34		P30006-10		WHT/BLU	26	29.5"	
35	-35	INT	P30006-7		GRN	26	29.5"	
36	-36		P30006-9		WHT/GRY	26	29.5"	
37	-37		P50002-12		WHT	26	39.0"	
38	P50002-1		P10017-23	*				
39	-2	-24V	TB49001-1		VIO	26	26.0"	
40	-3	KEY	NC					
41	-4		P30003-9		WHT/GRN	26	36.0"	
42	-5		P10017-14	*				
43	-6		P10017-12	*				
44	-7	+5V	TB49001-3		ORN	22	25.5"	
45	-8		NC					
46	-9		P10017-11	*				
47	-10	-12V	TB49001-4		YEL	26	25.0"	
48	-11		P10017-13	*				
49	-12		P10017-37	*				

F G H I J K

WIRE RUNNING LIST

PART NO.7007-9080-200

SHT 6 OF 8

** COAX SHIELDS FIRST JOINED W/2" OF BLK 26 AWG WIRE.
NOTE:COVER COAX SHIELD CONNECTIONS W/HEATSHRINK TUBING A/R.
* REPEAT

LINE	FROM		TO		WIRE			
NO.	TERMINAL	NOTES	TERMINAL	NOTES	COLOR	AWG	LG	NOTES
98	P33003-7		NC					
99	-8		NC					
100	P30003-1	GND	TB49001-5		BLK	22	16.0"	
101	-2		KEY					
102	-3		P10017-17	*				
103	-4	+12V	TB49001-2		RED	26	17.5"	
104	-5	-12V	TB49001-4		YEL	22	16.5"	
105	-6	+5V	TB49001-3		ORN	22	17.0"	
106	-7		P47002-4	*				
107	-8		P10017-31	*				
108	-9		P50002-4	*				
109	-10		P10017-30	*				
110	-11		P47002-2	*				
111	-12		P36001-5	*				
112	-13	CTR COND	E37001 CTR COND	***	RG178		34.0"	
113								
114	-14		NC					
115	-15 COAX SHEILDS OF LINE #112		GL37001		BLK	22		2.0" EA END
116	P30006-1		NC					
117	-2		NC					
118	-3		KEY					
119	-4		NC					
120	-5		NC					
121	-6		P10017-32	*				

WIRE RUNNING LIST

PART NO.7007-9080-200

SHT. 2 OF 8

** COAX SHIELDS FIRST JOINED W/2" OF BLK 26 AWG WIRE.
NOTE:COVER COAX SHIELD CONNECTIONS W/HEATSHRINK TUBING A/R.
* REPEAT

LINE	FROM		TO		WIRE			
NO.	TERMINAL	NOTES	TERMINAL	NOTES	COLOR	AWG	LG	NOTES
1	P10017-1		J11002-1		GRY	22	22.0"	
2	-2		P11001-2		WHT/BLK	22	21.5"	
3	-3		NC					
4	-4	EFF/ANN	P17003-7		WHT/BLK	26	21.0"	
5	-5	GND	TB49001-5		BLK	22	12.0"	
6	-6	-12V	TB49001-4		YEL	22	11.5"	
7	-7	+5V	TB49001-3		ORN	22	11.0"	
8	-8	+12V	TB49001-2		RED	22	10.5"	
9	-9	-24V	TB49001-1		VIO	22	11.5"	
10	-10	PK/EFF	P17003-8		WHT/GRN	26	21.0"	
11	-11		P50002-9		WHT	26	34.5"	
12	-12		P50002-6		WHT/BLU	26	34.5"	
13	-13		P50002-11		WHT/GRY	26	38.5"	
14	-14		P50002-5		WHT/VIO	26	35.0"	
15	-15		P50002-14		WHT/YEL	26	35.0"	
16	-16		P47002-3		WHT/RED	26	23.0"	
17	-17		P33003-3		WHT/GRN	26	27.0"	
18	-18		P47002-9		WHT/GRY	26	23.5"	
19	-19		P17003-1		WHT/ORN	26	20.0"	
20	-20		P33003-5		WHT/RED	26	28.0"	
21	-21		P33003-4		WHT/VIO	26	28.0"	
22	-22		P33003-3		WHT/BLU	26	28.0	
23	-23		P50002-1		WHT/BRN	26	37.5"	
24	-24		P23007-3		WHT/YEL	26	28.0"	
25	-25		P36001-6		WHT/VIO	26	26.5"	

DATE	REV	DRAWING	APVD
		SEE SHEET 1	

WIRE RUNNING LIST

PART NO.7007-9080-200

SHT. 5 OF 8

** COAX SHIELDS FIRST JOINED W/2" OF BLK 26 AWG WIRE.
NOTE:COVER COAX CONNECTIONS W/HEATSHRINK TUBING A/R.
* REPEAT

LINE	FROM		TO		WIRE			
NO.	TERMINAL	NOTES	TERMINAL	NOTES	COLOR	AWG	LC	NOTES
74	P17003-7		P10017-4	*				
75	-8		P10017-10	*				
76	-9		NC					
77	-10		NC					
78	P36001-1	GND	TB49001-5		BLK	22	17.5"	
79	-2	-24V	TB49001-1		VIO	26	18.5"	
80	-3	-12V	TB49001-4		YEL	26	17.5"	
81	-4	+12V	TB49001-2		RED	26	18.0"	
82	-5		P30003-12		WHT/BRN	26	29.5"	
83	-6		P10017-25	*				
84	-7		NC					
85	-8		NC					
86	P23007-1	GND	TB49001-5		BLK	22	17.5"	
87	-1		COAX SHIELDS LINE #90 & 91	**	BLK	26	2.0"	
88	-2	+5V	TB49001-3		ORN	22	18.0"	
89	-3		P10017-24	*				
90	-4		P10017-27	*				
91	-5		P10017-29	*				
92	P33003-1	+12V	TB49001-2		RED	22	18.5"	
93	-2	-12V	TB49001-4		YEL	22	17.5"	
94	-3		P10017-22	*				
95	-4		P10017-21	*				
96	-5		P10017-20	*				
97	-6	GND	TB49001-5		BLK	22	17.5"	

WIRE RUNNING LIST

PART NO.7007-9080-200

SHT. 1 OF 8

INDEX

TERMINAL	SHEET NO.
E37001	7
K12001	7
P10017	2,3
P11002	7
P17003	4,5
P23007	5
P30003	6
P30006	6,7
P33003	5,6
P47002	4
P50002	3,4
P11001	7
P23005	8

LEGEND:

ASTERISK (*) - WIRE RUN REPEATED FOR REFERENCE ONLY
NC - NO CONNECTION
(N) - NUMBER (QTY) OF WIRES
PGT - PIGTAIL
SS(X) - SHIELDED SINGLE NO.X
SP(X) - SHIELDED PAIR NO.X
ST(X) - SHIELDED TRIPLE NO.X
SQ(X) - SHIELDED QUAD (4) NO.X
CX(X) - COAX NO.X (CENTER CONDUCTOR ONLY)
S - SOLDER
C(N) - CONNECTION SO INDICATED HAS MULTIPLE CONDUCTORS ATTACHED AND IS NOT COMPLETED AT THIS TIME
M - MALE TERMINAL
F - FEMALE TERMINAL
T - TAG IDENTIFY BY TERMINAL DESIGNATION

DRAWN A.OSBURN 2-3-92	IFR SYSTEMS INC	
CHECKED S.LEONARD 2-3-92	TITLE WIRE HARNESS ASSY, MAIN	
APPROVED P.HARRIS 2-3-92	SIZE 7007-9080-200	REV A-4
SCALE: NONE	DO NOT SCALE THIS DRAWING	SHEET 2 OF 2

1 2 3 4 5 6 7

REQUEST

BILL OF MATERIAL LISTED BY REFERENCE DESIGNATOR
AS OF ALL DATES

ASSEMBLY PART NO.: 7007-9080-200
DESCRIPTION: WIRE HARN ASSY,MAIN RD-301A
ITEM MASTER REV: A4 ECO NO: #L143
REV OF THIS BOM: DATE OF LAST ECO: 09/03/92

STATUS	REFERENCE DESIGNATOR	QUANTITY PER ASSY	PART NUMBER	DESCRIPTION	EFFEC
ACTIVE		1.99	6001-5000-001	WIRE,HOOK,TFE,20GA, 7S,BLACK	00/00
ACTIVE		1.08	6001-5000-003	WIRE,HOOK,TFE,20GA, 7S,RED	00/00
ACTIVE		1.08	6001-5000-004	WIRE,HOOK,TFE,20GA, 7S,ORANGE	00/00
ACTIVE		.95	6001-5000-005	WIRE,HOOK,TFE,20GA, 7S,YELLOW	00/00
ACTIVE		1.08	6001-5000-008	WIRE,HOOK,TFE,20GA, 7S VIOLET	00/00
ACTIVE		1.80	6002-0000-011	WIRE,HOOK,TFE,22GA, 7S,WHT/BLK	00/00
ACTIVE		3.88	6008-1000-001	WIRE,HOOK,TFE,26GA, 7S,BLACK	00/00
ACTIVE		2.60	6008-1000-002	WIRE,HOOK,TFE,26GA, 7S,BROWN	00/00
ACTIVE		10.66	6008-1000-003	WIRE,HOOK,TFE,26GA, 7S,RED	00/00
ACTIVE		1.00	6008-1000-004	WIRE,HOOK,TFE,26GA, 7S,ORANGE	00/00
ACTIVE		5.75	6008-1000-005	WIRE,HOOK,TFE,26GA, 7S,YELLOW	00/00
ACTIVE		2.60	6008-1000-006	WIRE,HOOK,TFE,26GA, 7S,GREEN	00/00
ACTIVE		3.54	6008-1000-008	WIRE,HOOK,TFE,26GA, 7S,VIOLET	00/00
ACTIVE		9.00	6008-1000-010	WIRE,HOOK,TFE,26GA, 7S,WHITE	00/00
ACTIVE		8.08	6008-1000-011	WIRE,HOOK,TFE,26GA, 7S,WHT/BLK	00/00
ACTIVE		8.58	6008-1000-012	WIRE,HOOK,TFE,26GA, 7S,WHT/BRN	00/00
ACTIVE		4.45	6008-1000-013	WIRE,HOOK,TFE,26GA, 7S,WHT/RED	00/00
ACTIVE		4.41	6008-1000-014	WIRE,HOOK,TFE,26GA, 7S,WHT/ORG	00/00
ACTIVE		5.25	6008-1000-015	WIRE,HOOK,TFE,26GA, 7S,WHT/YEL	00/00
ACTIVE		7.08	6008-1000-016	WIRE,HOOK,TFE,26GA, 7S,WHT/GRN	00/00
ACTIVE		11.49	6008-1000-017	WIRE,HOOK,TFE,26GA, 7S,WHT/BLU	00/00
ACTIVE		7.66	6008-1000-018	WIRE,HOOK,TFE,26GA, 7S,WHT/VIO	00/00

BILL OF MATERIAL LISTED BY REFERENCE DESIGNATOR
AS OF ALL DATES

ASSEMBLY PART NO.: 7007-9080-200
DESCRIPTION: WIRE HARN ASSY,MAIN RD-301A
ITEM MASTER REV: A4 ECO NO: #L143
REV OF THIS BOM: DATE OF LAST ECO: 09/03/92

STATUS	REFERENCE DESIGNATOR	QUANTITY PER ASSY	PART NUMBER	DESCRIPTION	EFFEC
ACTIVE		7.58	6008-1000-019	WIRE,HOOK,TFE,26GA, 7S,WHT/GRY	00/00
ACTIVE		16.32	6008-3000-001	WIRE,HOOK,TFE,22GA, 7S,BLACK	00/00
ACTIVE		7.18	6008-3000-003	WIRE,HOOK,TFE,22GA, 7S,RED	00/00
ACTIVE		7.33	6008-3000-004	WIRE,HOOK,TFE,22GA, 7S,ORANGE	00/00
ACTIVE		4.27	6008-3000-005	WIRE,HOOK,TFE,22GA, 7S,YELLOW	00/00
ACTIVE		2.13	6008-3000-006	WIRE,HOOK,TFE,22GA, 7S,GREEN	00/00
ACTIVE		3.98	6008-3000-008	WIRE,HOOK,TFE,22GA, 7S,VIOLET	00/00
ACTIVE		2.69	6008-3000-009	WIRE,HOOK,TFE,22GA, 7S,GRAY	00/00
ACTIVE		2.03	6008-3000-010	WIRE,HOOK,TFE,22GA, 7S,WHITE	00/00
ACTIVE		7.58	6042-0000-005	CABLE,COAX,FLEX,RG-178B/U	00/00
ACTIVE		2.50	6042-0000-007	CABLE,COAX,FLEX,RG-316/U	00/00
ACTIVE	*01	10.00	2114-0002-000	CONTACT,BURNDY SC20M-1S6	00/00
ACTIVE	*02	3.00	2114-9001-001	CONTACT PIN26-22GA.SYM001T0.6*	00/00
ACTIVE	*03	1.00	2118-0000-001	KIT,MTG,D-SUB CONN	00/00
ACTIVE	*04	1.00	2109-0000-007	CLAMP CABLE TYRAP TY34M.8	00/00
ACTIVE	*05	48.00	2114-0000-022	CONTACT,DCANT,CRIMP,22-30,TIN	00/00
ACTIVE	*06	5.00	2127-9900-100	KEY,POLARIZIN,MOLEX 15-04-9209	00/00
ACTIVE	*07	22.00	2114-9002-001	CONTACT SKT26-22GA.SHF001T855*	00/00
ACTIVE	*08	1.00	2850-0000-056	LUG,GND,4	00/00
ACTIVE	*09	3.00	2114-0000-004	CONTACT,F D-SUB,CRIMP,24-28,SG	00/00
ACTIVE	*10	50.00	6004-6005-400	TY-RAP,4.0 LG	00/00
ACTIVE	*12	7.00	2114-0000-027	CONTACT,F D-SUB,CRIMP,20-24,SG	00/00

LI,283,2.MDATAB01 IFR SYSTEMS, INC.
MON, JAN 4, 1993, 12:46 PM

BILL OF MATERIAL LISTED BY REFERENCE DESIGNATOR
AS OF ALL DATES

ASSEMBLY PART NO.: 7007-9080-200
DESCRIPTION: WIRE HARN ASSY,MAIN RD-301A
ITEM MASTER REV: A4 ECO NO: #L143
REV OF THIS BOM: DATE OF LAST ECO: 09/03/92

STATUS	REFERENCE DESIGNATOR	QUANTITY PER ASSY	PART NUMBER	DESCRIPTION	EFFEC
ACTIVE	*13	27.00	2114-0000-028	SOCKET 66505-3 AMP REEL	00/00
ACTIVE	*SCHEM	.00	DWG-0000-9040-700	INTERCONNECT, FLOOR RD-301A	00/00
ACTIVE	J11002	1.00	2115-9001-005	CONN,RECT.098 RCPT 5-P,SMR05VB	00/00
ACTIVE	P10017	1.00	2116-0000-007	CONN,D-SUB,F,37-P,CCA(CNI)	00/00
ACTIVE	P11001	1.00	2115-8001-050	CONN,BURNDY SMS12P-1	00/00
ACTIVE	P11002	2.00	2115-9002-005	CONN,RECT.098 PLUG 5-P,SMP05VB	00/00
ACTIVE	P17003	2.00	2115-0000-013	CONN,C HSG,.100C,10-P	00/00
ACTIVE	P23007	-.--	2115-9002-005	CONN,RECT.098 PLUG 5-P,SMP05VB	00/00
ACTIVE	P25005	1.00	2115-9002-002	CONN,RECT.098 PLUG2-P.SMP02VB*	00/00
ACTIVE	P30003	3.00	2115-0000-014	CONN PLASTIC MOLEX 22-01-2151	00/00
ACTIVE	P30006	-.--	2115-0000-013	CONN,C HSG,.100C,10-P	00/00
ACTIVE	P33003	2.00	2115-9002-008	CONN,RECT.098 PLUG 8-P,SMP08VB	00/00
ACTIVE	P36001	-.--	2115-9002-008	CONN,RECT.098 PLUG 8-P,SMP08VB	00/00
ACTIVE	P47002	-.--	2115-0000-014	CONN PLASTIC MOLEX 22-01-2151	00/00
ACTIVE	P50002	-.--	2115-0000-014	CONN PLASTIC MOLEX 22-01-2151	00/00
ACTIVE	TB49001	1.00	6009-0000-003	TERM BD,NO BARI,SR,ULUG, 5-POS	00/00

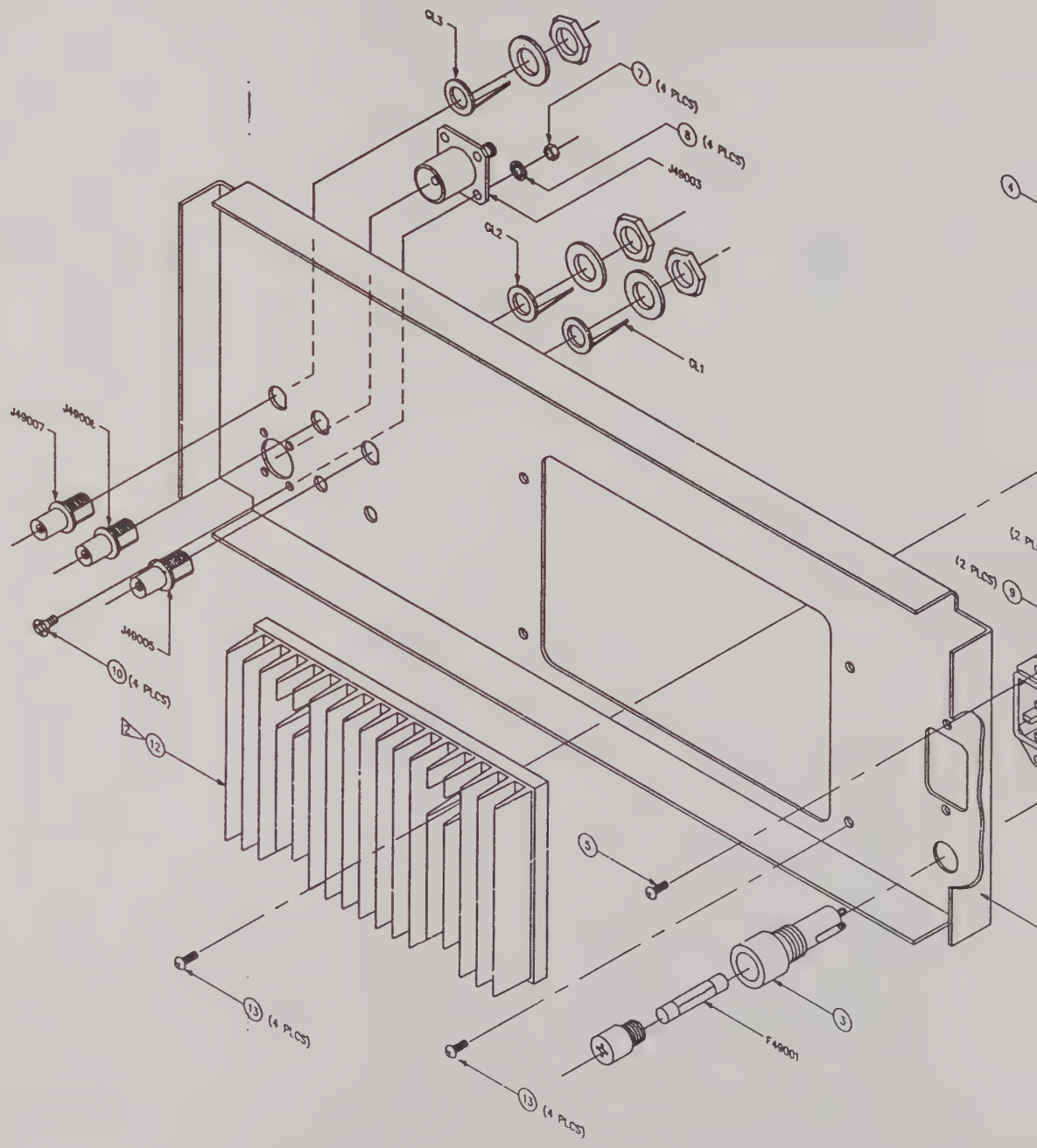

WIRE RUNNING LIST				
FROM	TO	AWG	COLOR	LENGTH
J49008-N	P11002-5	22	WHT	5.0"±.10
J49008-G	P11002-3	22	GREEN	5.0"±.10
J49008-L	P49001-2	22	GRAY	5.0"±.10
F49001-G	P11002-1	22	GRAY	5.0"±.10

F | G | H | J | K | L

DATE	REV	CHANGE		APVD
02-06-92	A	DESIGN RELEASE	AO	SL
2/21/92	A1	INC. REF #J109	SCP	SL
4/10/92	A2	INC REF #J126	RH	SL
11/24/92	A3	INC REF #J147	JDL	SL

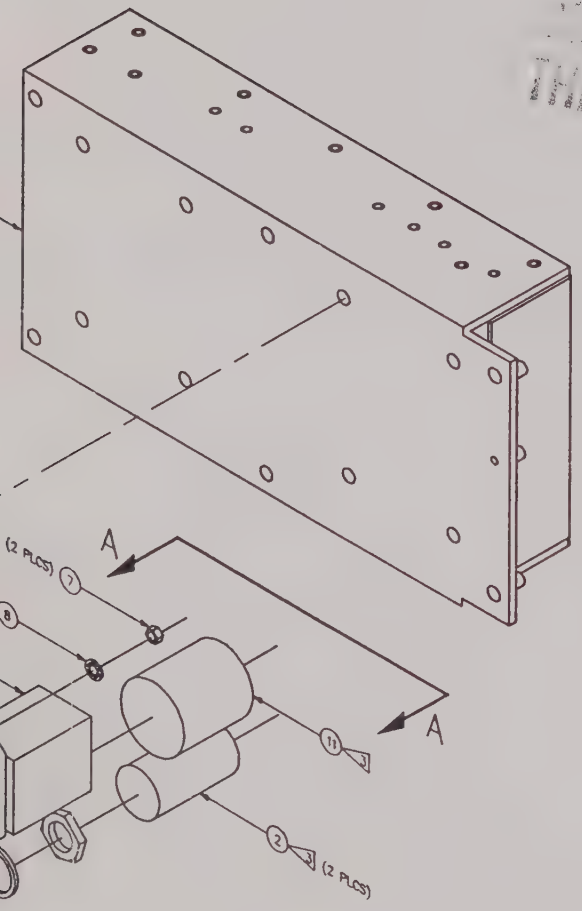

NOTES:

1. REF DES SERIES IS 11000
2. APPLY THERMAL COMPOUND ON BACK OF HEATSINK, ITEM (12).
3. INSTALLED AFTER WIRE HARNESS.

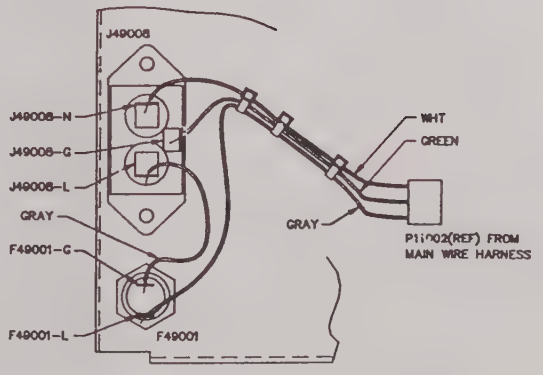

VIEW A-A
SCALE: NONE

	IFR SYSTEMS INC. 10200 West York St., Wichita, Kansas 67215	
DRAWN WAW 12-11-91	TITLE MECH ASSY REAR PANEL	
CHECKED S. LEONARD 2-6-92		
APPROVED P. HARRIS 2-6-92	SIZE D	DWG. NO. 7005-9040-900 REV A3
	SCALE: 1=1	DO NOT SCALE CAGE 51190 SHEET 1 OF 1

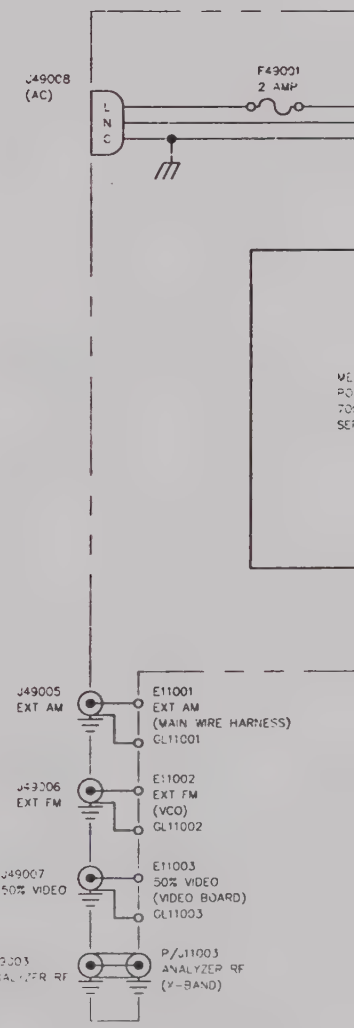
J49008
(AC)
L
N
G
F43021
2 AMP
J49005
EXT AM
E11001
EXT AM
(MAIN WIRE HARNESS)
GL11001
J49006
EXT FM
E11002
EXT FM
(VCO)
GL11002
J49007
50% VIDEO
E11003
50% VIDEO
(VIDEO BOARD)
GL11003
P/J11003
ANALYZER RF
(Y-BAND)

DATE	REV	CHANGE		APPROVED
3-23-92	A	DESIGN RELEASE	LJH	SL
5-6-92	A1	INC REF #L132	J.M.	SL

DOCUMENTATION MUST BE SUBMITTED THROUGH ENGINEERING
NOV 11 1992

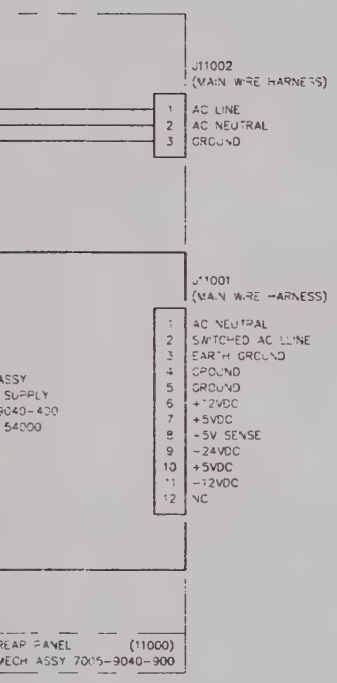

NOTES:
(UNLESS OTHERWISE SPECIFIED)

1. ALL REFERENCE NUMBERS CARRY AN ASSIGNED DESIGNATOR SERIES.
   THIS SCHEMATIC CARRIES SERIES 11000

CAUTION:
CONTAINS PARTS AND ASSEMBLIES SUSCEPTIBLE TO DAMAGE BY ELECTROSTATIC DISCHARGE (ESD)

DRAWN D. HARDER 10-25-91	TITLE SCHEMATIC REAR PANEL
CHECKED S. LEONARD 3-23-92	
APPROVED P. HARRIS 3-24-92	

REQUES

BILL OF MATERIAL LISTED BY REFERENCE DESIGNATOR
AS OF ALL DATES

ASSEMBLY PART NO.: 7005-9040-900
DESCRIPTION: MECH ASSY,REAR PANEL
ITEM MASTER REV: A3 ECO NO: #L147
REV OF THIS BOM: DATE OF LAST ECO: 11/24/92

STATUS	REFERENCE DESIGNATOR	QUANTITY PER ASSY	PART NUMBER	DESCRIPTION		EFFE
ACTIVE		.25	6008-3000-009	WIRE,HOOK,TFE,22GA, 7S,GRAY		00/0
ACTIVE	*01	1.00	1405-9050-500	PANEL, REAR RD-301A		00/0
ACTIVE	*02	1.00	6007-0000-001	CAP,S ID.375-RED 1 INCH		00/0
ACTIVE	*03	1.00	5106-0000-011	HOLDER,FUSE,BUSSMAN HKP		00/0
ACTIVE	*04	1.00	7005-9040-400	MECH ASSY,PWR SUPPLY		00/0
ACTIVE	*05	2.00	2803-0375-006	SCREW, 4-40 X 3/8 PPHM		00/0
ACTIVE	*07	6.00	2850-0000-008	NUT,HEX,REG PAT,4-40		00/0
ACTIVE	*08	6.00	2840-0000-003	WASHER,LOCK,INT TOOTH,4		00/0
ACTIVE	*10	4.00	2803-0313-003	SCREW 4-40 X 5/16 PFHMS		00/0
ACTIVE	*11	1.00	6007-0000-003	BOOT,LINE RCPT AC	*	00/0
ACTIVE	*12	1.00	5400-9051-700	HEATSINK,PWR SUPPLY		00/0
ACTIVE	*13	8.00	2805-0500-006	SCREW 8-32 X 1/2 PBHMS	*	00/0
ACTIVE	*14	4.00	2840-0000-002	WASHER,LOCK,INT TOOTH,8		00/0
ACTIVE	*SCHEM	.00	DWG-0000-9040-900	SCHEM,REAR PANEL MECH ASSY		00/0
ACTIVE	F49001	1.00	5106-0000-017	FUSE,1.25,GL,FAST,250V 2.0A	*	00/0
ACTIVE	GL11001	3.00	2850-0000-025	GROUND LUG 31-759		00/0
ACTIVE	GL11002	-.--	2850-0000-025	GROUND LUG 31-759		00/0
ACTIVE	GL11003	-.--	2850-0000-025	GROUND LUG 31-759		00/0
ACTIVE	J49003	1.00	2200-6950-100	CONN,F N/SMA F,STR BULKHEAD		00/0
ACTIVE	J49005	3.00	2113-0000-020	CONN UG1094/U		00/0
ACTIVE	J49006	-.--	2113-0000-020	CONN UG1094/U		00/0
ACTIVE	J49007	-.--	2113-0000-020	CONN UG1094/U		00/0

LI,283,2.MDATAB01 IFR SYSTEMS, INC.
MON, JAN 4, 1993, 12:46 PM

BILL OF MATERIAL LISTED BY REFERENCE DESIGNATOR
AS OF ALL DATES

ASSEMBLY PART NO.: 7005-9040-900
DESCRIPTION: MECH ASSY,REAR PANEL
ITEM MASTER REV: A3 ECO NO: #L147
REV OF THIS BOM: DATE OF LAST ECO: 11/24/92

STATUS	REFERENCE DESIGNATOR	QUANTITY PER ASSY	PART NUMBER	DESCRIPTION	EFFE(
ACTIVE	J49008	1.00	2220-1021-100	CONN, PWR, FLTR AC, MALE RCPT*	00/0(

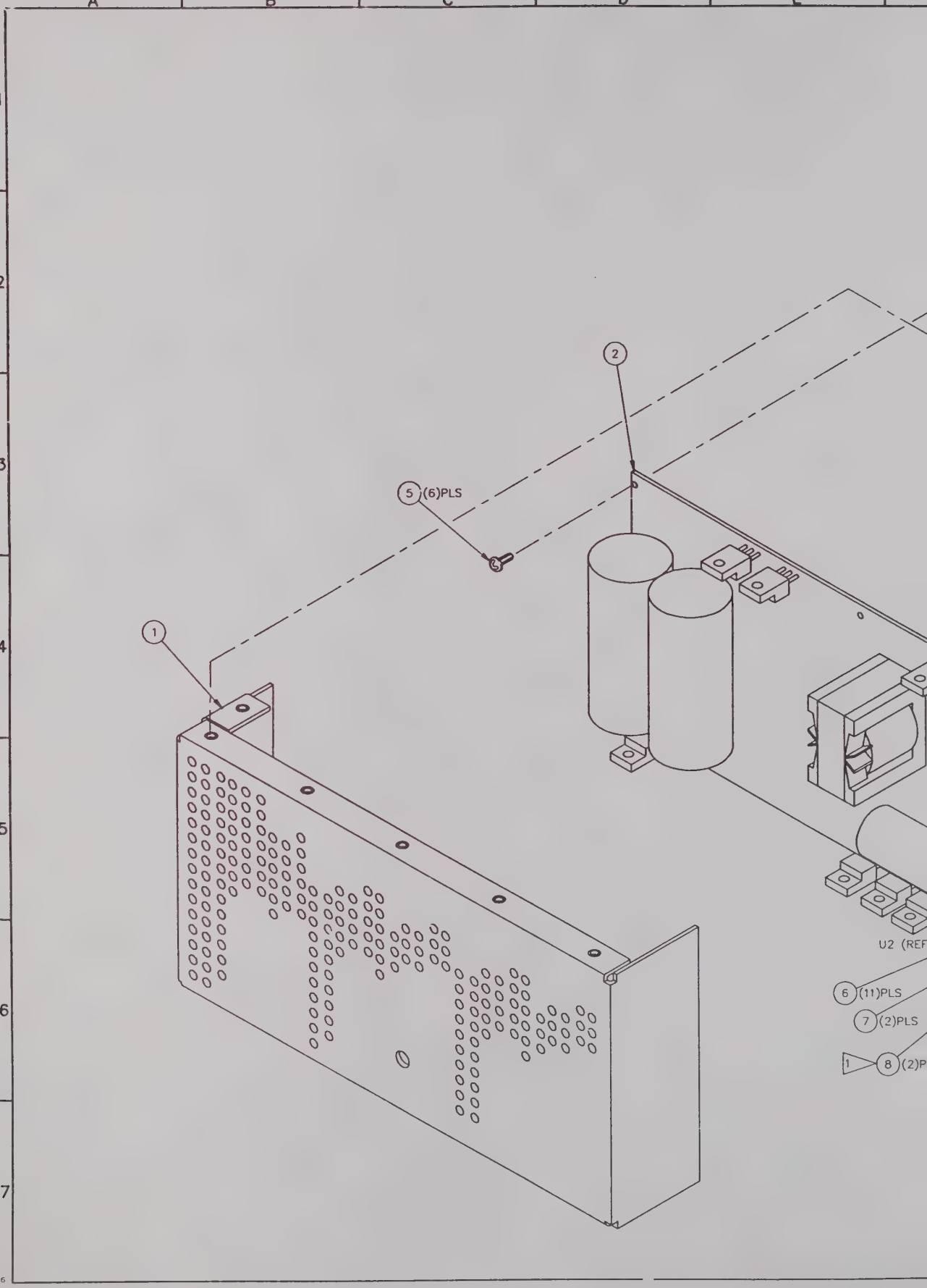
A
B
C
D
E
1
2
3
4
5
6
7
2
5 (6)PLS
1
U2 (REF
6 (11)PLS
7 (2)PLS
1
8 (2)P

DATE	REV	CHANGE	APVD
2/3/92	A	DESIGN RELEASE	SL
2/21/92	A1	INC. REF #L110 SCP	SL
4/23/92	A2	INC REF # L129 RH	SL

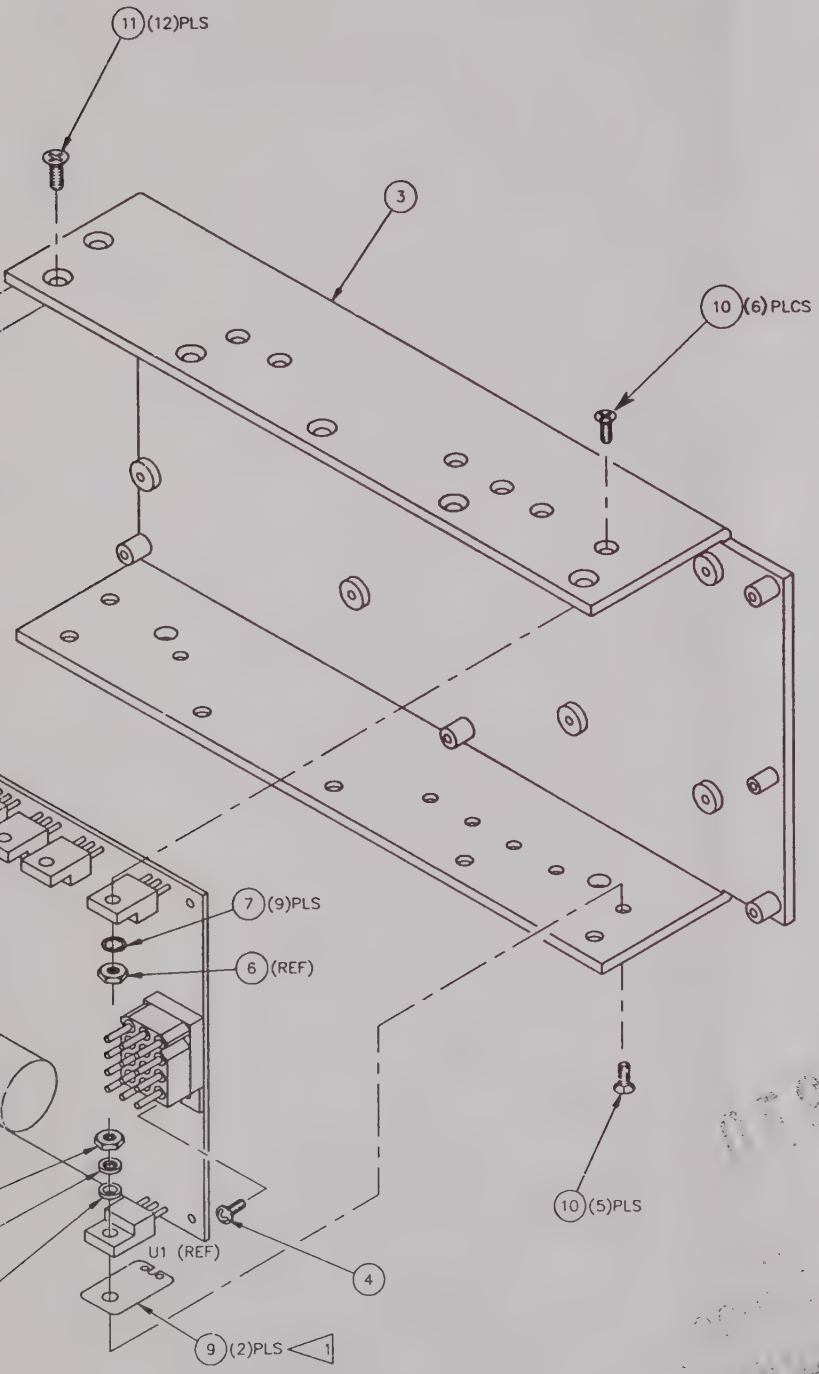

NOTES:

1. ITEM #8 AND #9 ARE USED ON U1 AND U2 ONLY.
2. REF SCHEMATIC: 0000-9040-400.

ORIGINAL RELEASE
APR 27 1992

	IFR SYSTEMS INC 10200 West York St. Wichita, Kansas 67215
DRAWN HARRIS 1/31/92	TITLE MECH ASSY PWR SUPPLY
CHECKED S.LEONARD 2/3/92	
APPROVED P.HARRIS 2/3/92	SIZE D DWG. NO. 7005-9040-400 REV A2
	PLOT SCALE: 1=1 SCALE 1=1 CAGE 51190 SHEET 1 OF 1

ASSY NO.	REVISION	DESCRIPTION	LAST ECN	DATE INC
7005-9040-400	A2	MECH ASSY,PWR SUPPLY	#L129	04/24/92

STAT	REF.DES.	QTY	COMP. PART NO.	DESCRIPTION	EFFECTIVE
ACT	*01	1.00	1414-9050-600	COVER, POWER SUPPLY	00/00/00
ACT	*02	1.00	7010-9030-400	PCB ASSY,PWR SUPPLY	00/00/00
ACT	*03	1.00	1415-9050-700	ENCLOSURE, POWER SUPPLY	00/00/00
ACT	*04	1.00	2803-0438-006	SCREW,4-40 X 7/16 PPHM	00/00/00
ACT	*05	6.00	2803-0375-006	SCREW,4-40X3/8,PPHMSSS	00/00/00
ACT	*06	11.00	2850-0000-008	NUT,HEX,REG PAT,4-40	00/00/00
ACT	*07	11.00	2840-0000-003	WASHER,LOCK,INT TOOTH,4	00/00/00
ACT	*08	2.00	2840-6153-500	WASHER PPS SHOULDER *	00/00/00
ACT	*09	2.00	4835-0000-103	INSUL,MICA,TO-220 TRANS,DF103B	00/00/00
ACT	*10	11.00	2803-0375-003	SCREW,4-40 X 3/8 PFHM	00/00/00
ACT	*11	12.00	2804-0250-003	SCREW 6-32X1/4 PFHMS	00/00/00

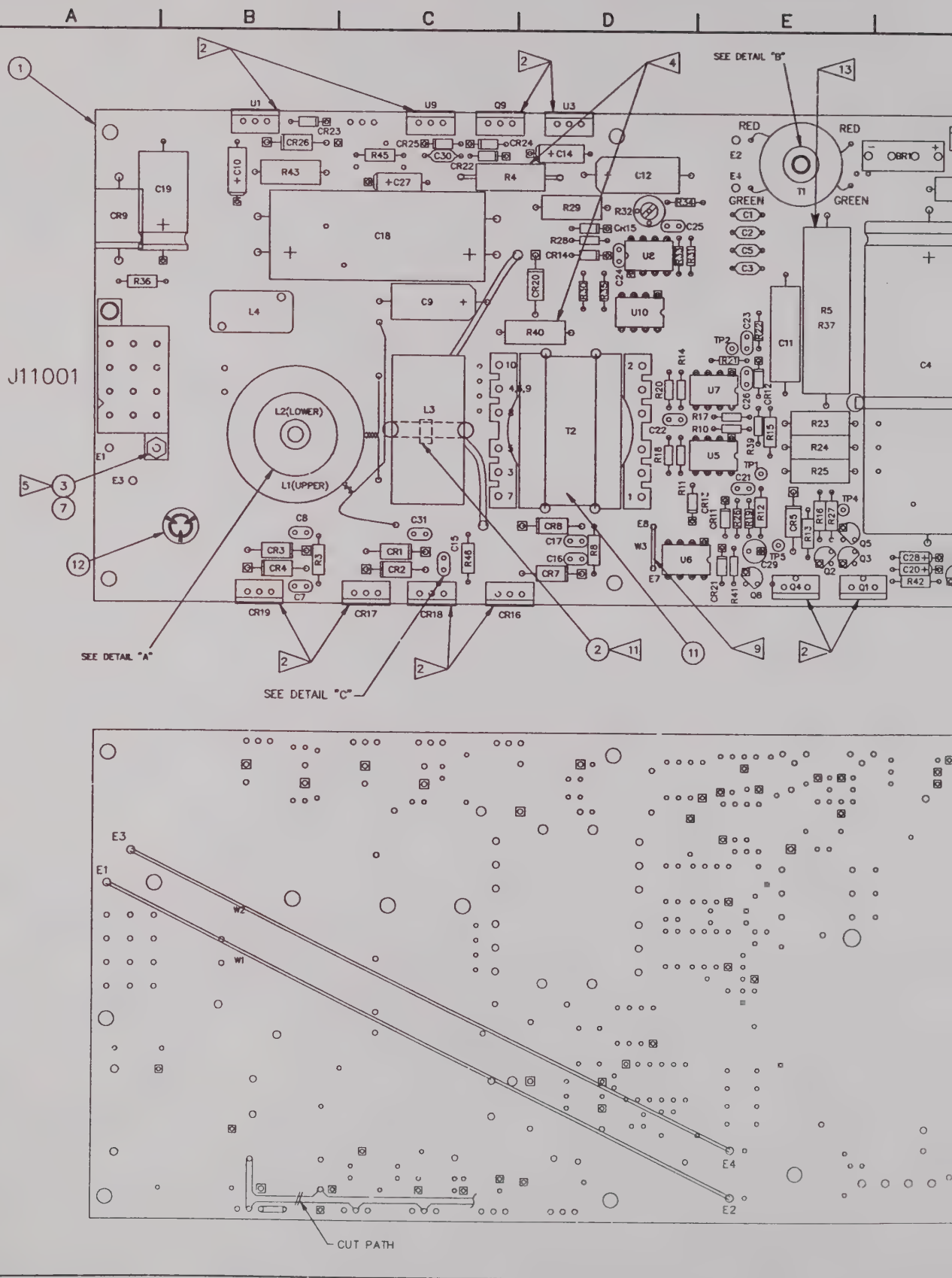
A
B
C
D
E
1
2
3
4
5
6
7
J11001
SEE DETAIL "A"
SEE DETAIL "B"
SEE DETAIL "C"
L1(UPPER)
L2(LOWER)
L3
L4
T1
T2
RED
GREEN
E1
E2
E3
E4
E7
E8
W1
W2
W3
CUT PATH

DATE	REV	CHANGE		APVD
12-4-91	A	DESIGN RELEASE	WAW	SL
12-23-91	A-1	INC REF #L105	JS	SL
2/21/92	A2	INC. REF #L111	SCP	SL
4/23/92	A3	INC REF #L130	RH	

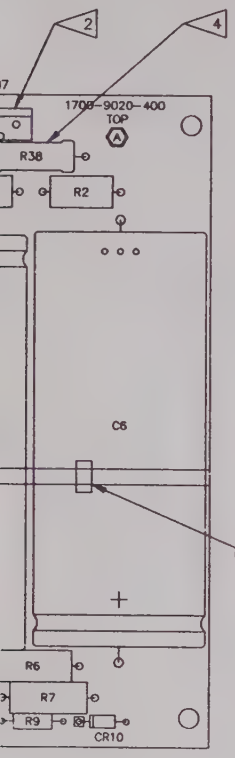

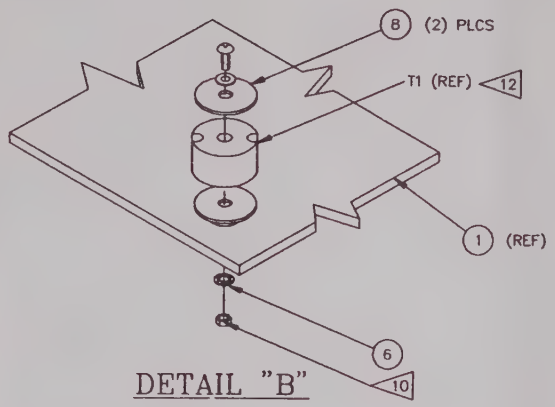

DETAIL "B"

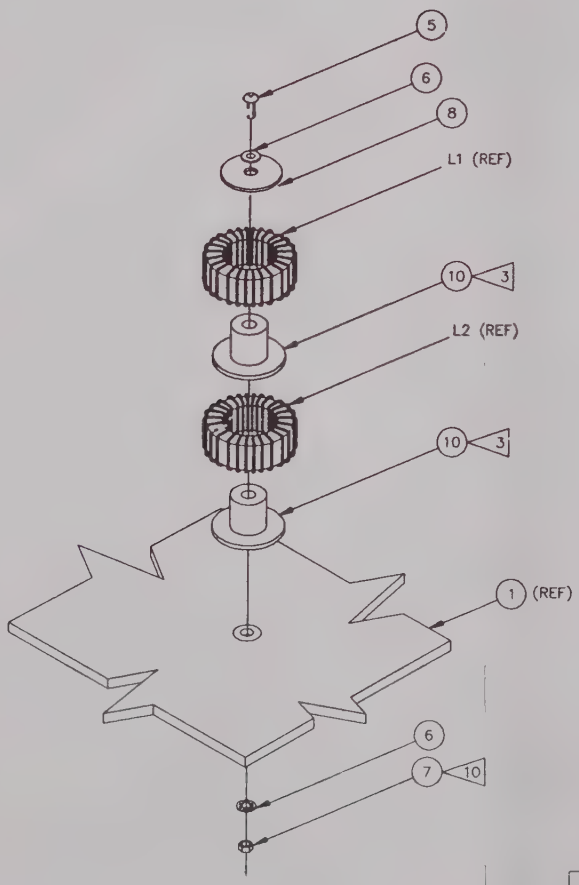

DETAIL "A"

NOTES:

1. ALL REFERENCE DESIGNATORS CARRY AN ASSIGNED DESIGNATOR SERIES, THIS DWG. CARRIES SERIES 55000 (i.e., R1 IS R55001).
2. ALIGN PARTS WITH JIG AND SOLDER.
3. APPLY RTV SILICON AROUND HUBS BEFORE ASSEMBLING L1 & L2 ONTO HUBS.
4. RAISE R4, R38 & R40 OFF .25±.05 OFF PC BD. MEASURE FROM BOTTOM OF RESISTOR TO PC BOARD.
5. CLIP FLUSH WITH NUT AFTER ASSEMBLY.
6. 2 TY-RAPS CONNECTED TOGETHER.
7. CONFORMAL COAT PER IFR-STD-0105.
8. NOT USED
9. INSTALLED IN FINAL TEST.
10. APPLY LOC-TITE 222 (1050-0000-047)
11. TYRAP LATCH SHOULD BE INSIDE TOROID.
12. HARDWARE SUPPLIED WITH PART T1.
13. R5 AND R37 ARE MOUNTED ON TOP OF EACH OTHER WITH LEADS TIED TOGETHER AS CLOSE TO RESISTOR BODY AS POSSIBLE.

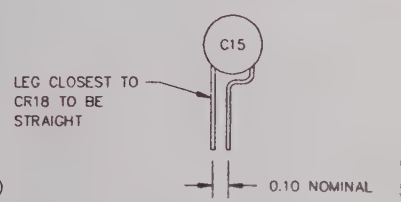

DETAIL "C"

PREP C15 AS SHOWN BEFORE INSTALLING.

CAUTION:
CONTAINS PARTS AND ASSEMBLIES SUSCEPTIBLE TO DAMAGE BY ELECTROSTATIC DISCHARGE (ESD)

DRAWN SIGLER 9-10-91	IFR SYSTEMS, INC.	
CHECKED J. SCHMIDT 12/4/91	TITLE: PCB ASSEMBLY PWR SUPPLY	
APPROVED P.R. HARRIS 12/4/91	SIZE D	DWG. NO. 7010-9030-400 REV A3
	SCALE 2=1	DO NOT SCALE CAGE 51190 SHEET 1 OF 1

PRINT DATE 06/17/92 BILL OF MATERIAL LISTED BY REF. DESIG. PAGE 1 ST.

ASSY NO.	REVISION	DESCRIPTION	LAST ECN	DATE INC
7010-9030-400	A3	PCB ASSY,PWR SUPPLY	#L130	04/24/92

STAT	REF.DES.	QTY	COMP. PART NO.	DESCRIPTION	EFFECTIVE
ACT	*01	1.00	1700-9020-400	PC BD, PWR SUPPLY	00/00/00
ACT	*02	3.00	6004-6005-550	TY-RAP,5.5 LG	00/00/00
ACT	*03	1.00	2803-0500-051	SCREW 4-40 X 1/2 SPHM NYLON	00/00/00
ACT	*05	1.00	2803-1500-006	SCREW 4-40 X 1 1/2 PBHMS	00/00/00
ACT	*06	4.00	2840-0000-009	WASHER,FLAT,4,MS15795-803	00/00/00
ACT	*07	3.00	2850-0000-020	NUT,HEX,SMALL PAT,4-40	00/00/00
ACT	*08	3.00	2840-7600-216	WASHER,PHEN,.630D,.140ID,.060T	00/00/00
ACT	*10	2.00	2510-2327-102	HUB,MTG,INDUCTOR	00/00/00
ACT	*11	1.00	2109-0000-010	MOUNTING CLAMP PWR SUP TRANS *	00/00/00
ACT	*12	1.00	2400-7856-800	LABEL,ESD	00/00/00
ACT	*W1	.53	6008-4000-010	WIRE,HOOK,TFE,20GA, 7S,WHITE	00/00/00
ACT	*W2	.50	6008-4000-001	WIRE,HOOK,TFE,20GA, 7S,BLACK	00/00/00
ACT	*W3	.00	1050-0000-073	WIRE,BUS,TINNED COPPER,22GA	00/00/00
ACT	BR55001	1.00	4823-2010-600	RECT,PH60 ,BRIDGE, 600V, 5A	00/00/00
ACT	C55001	5.00	1501-0332-001	CAP,PF 3300, 1000V,DISC, 20	00/00/00
ACT	C55002	-.--	1501-0332-001	CAP,PF 3300, 1000V,DISC, 20	00/00/00
ACT	C55003	-.--	1501-0332-001	CAP,PF 3300, 1000V,DISC, 20	00/00/00
ACT	C55004	2.00	1580-4010-800	CAP,UF 400, 180V,ELE, 100	00/00/00
ACT	C55005	-.--	1501-0332-001	CAP,PF 3300, 1000V,DISC, 20	00/00/00
ACT	C55006	-.--	1580-4010-800	CAP,UF 400, 180V,ELE, 100	00/00/00
ACT	C55007	2.00	1506-0562-017	CAP,PF 5600, 100V,NPO, 5	00/00/00
ACT	C55008	-.--	1506-0562-017	CAP,PF 5600, 100V,NPO, 5	00/00/00
ACT	C55009	2.00	1507-0476-018	CAP,UF 47, 35V,TANT, 20	00/00/00
ACT	C55010	3.00	1507-0685-018	CAP,UF 6.8, 35V,TANT, 20	00/00/00
ACT	C55011	1.00	1503-0104-009	CAP,uF .10 200V, PE 5 *	00/00/00
ACT	C55012	-.--	1507-0476-018	CAP,UF 47, 35V,TANT, 20	00/00/00

ASSY NO.	REVISION	DESCRIPTION	LAST ECN	DATE INC
7010-9030-400	A3	PCB ASSY,PWR SUPPLY	#L130	04/24/92

STAT	REF.DES.	QTY	COMP. PART NO.	DESCRIPTION	EFFECTIVE
ACT	C55013	6.00	0002-0000-000	*** REF DESIG NOT USED ***	00/00/00
ACT	C55014	-.--	1507-0685-018	CAP,UF 6.8, 35V,TANT, 20	00/00/00
ACT	C55015	-.--	1501-0332-001	CAP,PF 3300, 1000V,DISC, 20	00/00/00
ACT	C55016	4.00	1506-0103-017	CAP, uF .010, 100V, NPO *	00/00/00
ACT	C55017	-.--	1506-0103-017	CAP, uF .010, 100V, NPO *	00/00/00
ACT	C55018	1.00	1515-0202-075	CAP,UF 2000, 7V,ELE,4L	00/00/00
ACT	C55019	1.00	1515-0471-006	CAP,UF 470, 10V,ELE, 10	00/00/00
ACT	C55020	2.00	1507-0105-018	CAP,uF 1.0, 35V,TANT, 20 *	00/00/00
ACT	C55021	1.00	1506-0152-017	CAP, pF 1500, 100V,NPO *	00/00/00
ACT	C55022	-.--	1506-0103-017	CAP, uF .010, 100V, NPO *	00/00/00
ACT	C55023	1.00	1506-0471-017	CAP,pF 470, 100V,NPO 5 *	00/00/00
ACT	C55024	2.00	1506-0680-017	CAP,PF 68, 100V,NPO, 5	00/00/00
ACT	C55025	-.--	1506-0103-017	CAP, uF .010, 100V, NPO *	00/00/00
ACT	C55026	-.--	1506-0680-017	CAP,PF 68, 100V,NPO, 5	00/00/00
ACT	C55027	-.--	1507-0685-018	CAP,UF 6.8, 35V,TANT, 20	00/00/00
ACT	C55028	-.--	1507-0105-018	CAP,uF 1.0, 35V,TANT, 20 *	00/00/00
ACT	C55029	1.00	1580-2202-420	CAP, uF 22, 35V,ELE,RDL *	00/00/00
ACT	C55030	1.00	1521-0000-008	CAP,UF .10 50V,DIP Z5U *	00/00/00
ACT	C55031	1.00	1506-0332-017	CAP,PF 3300, 100V,NPO, 5	00/00/00
ACT	CR55001	8.00	4901-4937-000	DIODE, IN4937, RECT, 600V,1A *	00/00/00
ACT	CR55002	-.--	4901-4937-000	DIODE, IN4937, RECT, 600V,1A *	00/00/00
ACT	CR55003	-.--	4901-4937-000	DIODE, IN4937, RECT, 600V,1A *	00/00/00
ACT	CR55004	-.--	4901-4937-000	DIODE, IN4937, RECT, 600V,1A *	00/00/00
ACT	CR55005	-.--	4901-4937-000	DIODE, IN4937, RECT, 600V,1A *	00/00/00
ACT	CR55006	-.--	0002-0000-000	*** REF DESIG NOT USED ***	00/00/00
ACT	CR55007	-.--	4901-4937-000	DIODE, IN4937, RECT, 600V,1A *	00/00/00

ASSY NO.	REVISION	DESCRIPTION	LAST ECN	DATE INC
7010-9030-400	A3	PCB ASSY,PWR SUPPLY	#L130	04/24/92

STAT	REF.DES.	QTY	COMP. PART NO.	DESCRIPTION	EFFECTIVE
ACT	CR55008	-.--	4901-4937-000	DIODE, IN4937, RECT, 600V,1A *	00/00/00
ACT	CR55009	1.00	4945-0150-050	DIODE,5KP5.0 ,TZORB, 5V,5KW	00/00/00
ACT	CR55010	2.00	4901-5245-200	DIODE, 1N5245B ,ZENER, 15V,.5W	00/00/00
ACT	CR55011	5.00	4815-0000-003	DIODE, 1N4148 ,SIGNAL, 75PRV	00/00/00
ACT	CR55012	2.00	4816-0000-001	DIODE,5082-2800,S BAR, 70VBR	00/00/00
ACT	CR55013	-.--	4815-0000-003	DIODE, 1N4148 ,SIGNAL, 75PRV	00/00/00
ACT	CR55014	1.00	4818-0000-004	DIODE, 1N5234B ,ZENER,6.2V,.5W	00/00/00
ACT	CR55015	1.00	4818-0000-001	DIODE, 1N5240B ,ZENER, 10V,.5W	00/00/00
ACT	CR55016	1.00	4822-0000-006	RECT, 45V 20A DUAL ISO TO-220*	00/00/00
ACT	CR55017	3.00	4822-0000-005	RECT,200V 8V DUAL ISO TO-220 *	00/00/00
ACT	CR55018	-.--	4822-0000-005	RECT,200V 8V DUAL ISO TO-220 *	00/00/00
ACT	CR55019	-.--	4822-0000-005	RECT,200V 8V DUAL ISO TO-220 *	00/00/00
ACT	CR55020	-.--	4901-4937-000	DIODE, IN4937, RECT, 600V,1A *	00/00/00
ACT	CR55021	-.--	4815-0000-003	DIODE, 1N4148 ,SIGNAL, 75PRV	00/00/00
ACT	CR55022	-.--	4815-0000-003	DIODE, 1N4148 ,SIGNAL, 75PRV	00/00/00
ACT	CR55023	-.--	4815-0000-003	DIODE, 1N4148 ,SIGNAL, 75PRV	00/00/00
ACT	CR55024	-.--	4901-5245-200	DIODE, 1N5245B ,ZENER, 15V,.5W	00/00/00
ACT	CR55025	-.--	4816-0000-001	DIODE,5082-2800,S BAR, 70VBR	00/00/00
ACT	CR55026	1.00	4815-0000-002	DIODE, 1N4004 ,RECT, 400V, 1A	00/00/00
ACT	J11001	1.00	2115-8001-440	CONN,BURNDY SMS12RE-4-D70	00/00/00
ACT	L55001	2.00	1800-7626-000	INDUCTOR,TOROID,58T,22GA	00/00/00
ACT	L55002	-.--	1800-7626-000	INDUCTOR,TOROID,58T,22GA	00/00/00
ACT	L55003	1.00	1800-3881-900	INDUCTOR,TORROID,14GA,18T	00/00/00
ACT	L55004	1.00	1800-3882-000	INDUCTOR,TORROID,16GA, 4T	00/00/00
ACT	Q55001	1.00	5050-0344-000	TRANS,NPN,HIGH VOLTAGE	00/00/00
ACT	Q55002	4.00	4801-0000-001	TRANSISTOR NPN HS SW *	00/00/00

ASSY NO.	REVISION	DESCRIPTION	LAST ECN	DATE INC
7010-9030-400	A3	PCB ASSY,PWR SUPPLY	#L130	04/24/92

STAT	REF.DES.	QTY	COMP. PART NO.	DESCRIPTION		EFFECTIVE
ACT	Q55003	1.00	4805-0000-001	TRANS,2N2907A,PNP HS SW (3251)		00/00/00
ACT	Q55004	1.00	5050-2445-300	TRANS,N-CH 600V 2.5R ISO 220*		00/00/00
ACT	Q55005	-.--	4801-0000-001	TRANSISTOR NPN HS SW	*	00/00/00
ACT	Q55006	-.--	4801-0000-001	TRANSISTOR NPN HS SW	*	00/00/00
ACT	Q55007	2.00	4811-0000-009	TRANS,SCR 400V 8A ISO TO-220	*	00/00/00
ACT	Q55008	-.--	4801-0000-001	TRANSISTOR NPN HS SW	*	00/00/00
ACT	Q55009	-.--	4811-0000-009	TRANS,SCR 400V 8A ISO TO-220	*	00/00/00
ACT	R55001	2.00	4703-0104-003	RES, S, 1/2W, 100K OHM		00/00/00
ACT	R55002	-.--	4703-0104-003	RES, S, 1/2W, 100K OHM		00/00/00
ACT	R55003	1.00	4702-0104-003	RES, S, 1/4W, 100K OHM		00/00/00
ACT	R55004	1.00	4704-0102-003	RES, S, 1W, 1.0K OHM		00/00/00
ACT	R55005	2.00	4709-0103-004	RES, S, 7W, 10K OHM WW		00/00/00
ACT	R55006	2.00	4703-0274-002	RES, S, 1/2W, 270K OHM		00/00/00
ACT	R55007	-.--	4703-0274-002	RES, S, 1/2W, 270K OHM		00/00/00
ACT	R55008	1.00	4702-0103-003	RES,S, 1/4W 10K OHM	*	00/00/00
ACT	R55009	1.00	4702-0681-003	RES, S, 1/4W, 680 OHM		00/00/00
ACT	R55010	3.00	4701-0333-003	RES, S, 1/8W, 33K OHM		00/00/00
ACT	R55011	-.--	4701-0333-003	RES, S, 1/8W, 33K OHM		00/00/00
ACT	R55012	1.00	4702-0184-003	RES, S, 1/4W 180K OHM	*	00/00/00
ACT	R55013	1.00	4702-0270-003	RES, S, 1/4W 27 OHM	*	00/00/00
ACT	R55014	1.00	4701-0124-003	RES, S, 1/8W, 120K OHM		00/00/00
ACT	R55015	1.00	4702-0102-003	RES, S, 1/4W, 1.0K OHM		00/00/00
ACT	R55016	2.00	4702-0560-003	RES, S, 1/4W, 56 OHM		00/00/00
ACT	R55017	2.00	4701-0183-003	RES,S,1/8W, 18K OHM	*	00/00/00
ACT	R55018	3.00	4701-0153-003	RES, S, 1/8W, 15K OHM		00/00/00
ACT	R55019	1.00	4701-0223-003	RES, S, 1/8W, 22K OHM		00/00/00

ASSY NO.	REVISION	DESCRIPTION	LAST ECN	DATE INC
7010-9030-400	A3	PCB ASSY,PWR SUPPLY	#L130	04/24/92

STAT	REF.DES.	QTY	COMP. PART NO.	DESCRIPTION		EFFECTIVE
ACT	R55020	3.00	4701-0103-003	RES, 5, 1/8W, 10K OHM	*	00/00/00
ACT	R55021	1.00	4701-0472-003	RES, 5, 1/8W, 4.7K OHM		00/00/00
ACT	R55022	1.00	4701-0224-003	RES, 5, 1/8W, 220K OHM	*	00/00/00
ACT	R55023	3.00	4703-0109-003	RES, 5, 1/2W, 1.0 OHM	*	00/00/00
ACT	R55024	-.--	4703-0109-003	RES, 5, 1/2W, 1.0 OHM	*	00/00/00
ACT	R55025	-.--	4703-0109-003	RES, 5, 1/2W, 1.0 OHM	*	00/00/00
ACT	R55026	-.--	4701-0183-003	RES,5,1/8W, 18K OHM	*	00/00/00
ACT	R55027	-.--	4702-0560-003	RES, 5, 1/4W, 56 OHM		00/00/00
ACT	R55028	1.00	4701-0102-003	RES, 5, 1/8W, 1.0K OHM		00/00/00
ACT	R55029	1.00	4703-0331-003	RES, 5, 1/2W, 330 OHM		00/00/00
ACT	R55030	-.--	4701-0103-003	RES, 5, 1/8W, 10K OHM	*	00/00/00
ACT	R55031	-.--	4701-0153-003	RES, 5, 1/8W, 15K OHM		00/00/00
ACT	R55032	1.00	4752-0502-002	POT 5K OHM		00/00/00
ACT	R55033	-.--	4701-0333-003	RES, 5, 1/8W, 33K OHM		00/00/00
ACT	R55034	-.--	4701-0103-003	RES, 5, 1/8W, 10K OHM	*	00/00/00
ACT	R55035	1.00	4701-0182-003	RES, 5, 1/8W, 1.8K OHM		00/00/00
ACT	R55036	1.00	4702-0100-003	RES, 5, 1/4W, 10 OHM	*	00/00/00
ACT	R55037	-.--	4709-0103-004	RES, 5, 7W, 10K OHM WW		00/00/00
ACT	R55038	1.00	4707-0680-003	RES 3W 68 OHM WW	*	00/00/00
ACT	R55039	-.--	4701-0153-003	RES, 5, 1/8W, 15K OHM		00/00/00
ACT	R55040	1.00	4703-0159-003	RES, 5, 1/2W, 1.5 OHM		00/00/00
ACT	R55041	1.00	4701-0152-003	RES, 5, 1/8W, 1.5K OHM	*	00/00/00
ACT	R55042	1.00	4702-0472-003	RES, 5, 1/4W, 4.7K OHM		00/00/00
ACT	R55043	1.00	4703-0229-003	RES, 5, 1/2W, 2.2 OHM		00/00/00
ACT	R55044	-.--	0002-0000-000	*** REF DESIG NOT USED ***		00/00/00
ACT	R55045	1.00	4702-0151-003	RES, 5, 1/4W, 150 OHM		00/00/00

ASSY NO.	REVISION	DESCRIPTION	LAST ECN	DATE INC
7010-9030-400	A3	PCB ASSY,PWR SUPPLY	#L130	04/24/92

STAT	REF.DES.	QTY	COMP. PART NO.	DESCRIPTION	EFFECTIVE
ACT	R55046	1.00	4702-0274-003	RES, 5, 1/4W, 270K OHM	00/00/00
ACT	T55001	1.00	5604-3881-700	XFMR,INPUT FILTER,POWER SUPPLY	00/00/00
ACT	T55002	1.00	5604-9000-001	TRANSFORMER, PWR SUPPLY RD301A	00/00/00
ACT	TP55001	4.00	2114-0000-007	POST,GANG,PCB,.025SQ,.443LG *	87/03/18
ACT	TP55002	-.--	2114-0000-007	POST,GANG,PCB,.025SQ,.443LG *	87/03/18
ACT	TP55003	-.--	0002-0000-000	*** REF DESIG NOT USED ***	00/00/00
ACT	TP55004	-.--	2114-0000-007	POST,GANG,PCB,.025SQ,.443LG *	87/03/18
ACT	TP55005	-.--	2114-0000-007	POST,GANG,PCB,.025SQ,.443LG *	87/03/18
ACT	U55001	2.00	3224-0079-121	IC,7912CT,1.5A -12V REGULATOR	00/00/00
ACT	U55002	-.--	0002-0000-000	*** REF DESIG NOT USED ***	00/00/00
ACT	U55003	1.00	3224-0078-121	IC,78112,3A 12V 2% V REGULATOR	00/00/00
ACT	U55004	-.--	0002-0000-000	*** REF DESIG NOT USED ***	00/00/00
ACT	U55005	4.00	3133-0000-024	IC,3130,BIMOS OP AMP,PLAST DIP	00/00/00
ACT	U55006	-.--	3133-0000-024	IC,3130,BIMOS OP AMP,PLAST DIP	00/00/00
ACT	U55007	-.--	3133-0000-024	IC,3130,BIMOS OP AMP,PLAST DIP	00/00/00
ACT	U55008	-.--	3133-0000-024	IC,3130,BIMOS OP AMP,PLAST DIP	00/00/00
ACT	U55009	-.--	3224-0079-121	IC,7912CT,1.5A -12V REGULATOR	00/00/00
ACT	U55010	1.00	4819-0000-005	OPTO COUPLER 6N135 HIGH SPEED*	00/00/00

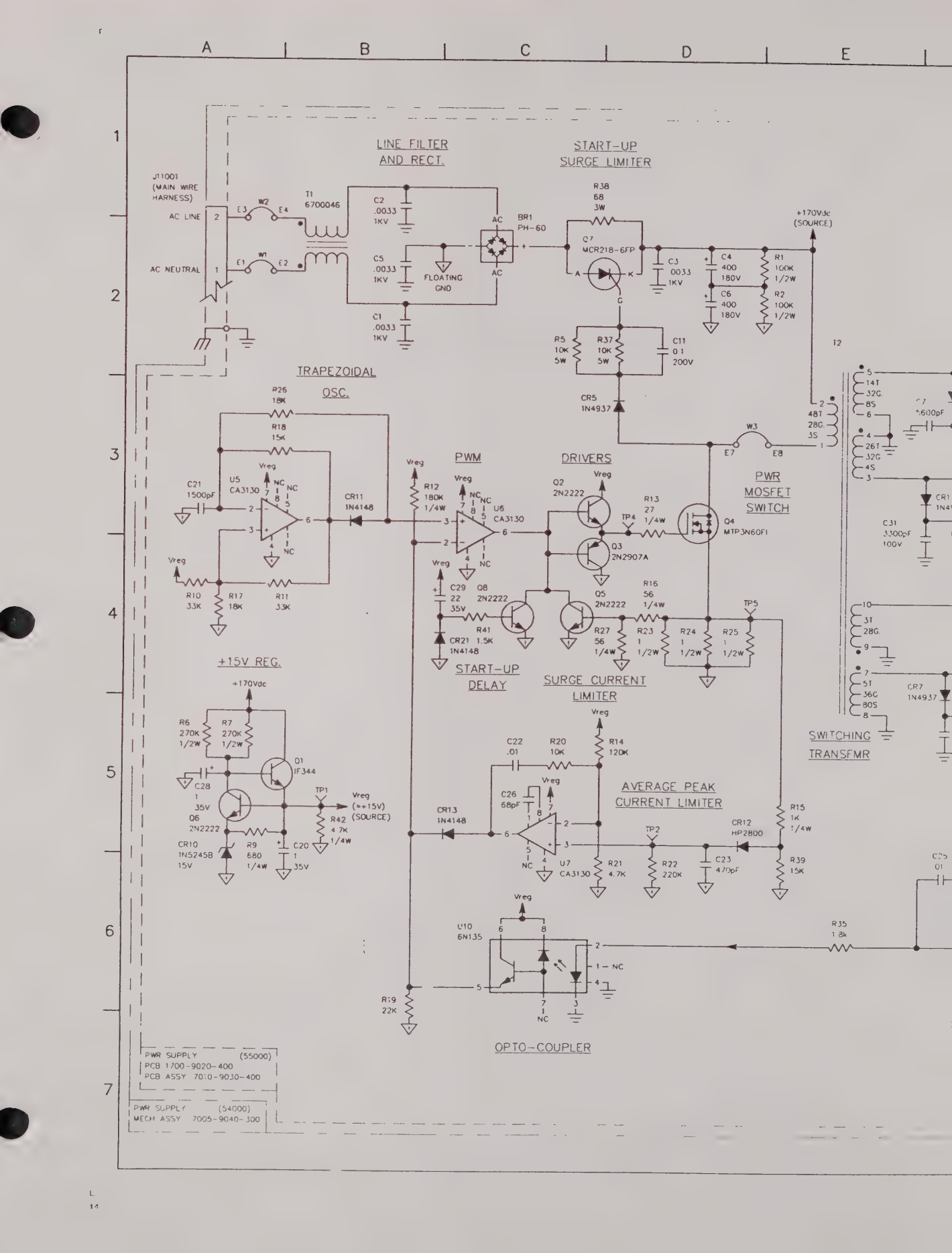
LINE FILTER AND RECT.
START-UP SURGE LIMITER
TRAPEZOIDAL OSC.
PWM
DRIVERS
PWR MOSFET SWITCH
+15V REG.
START-UP DELAY
SURGE CURRENT LIMITER
AVERAGE PEAK CURRENT LIMITER
SWITCHING TRANSFMR
OPTO-COUPLER
J1001 (MAIN WIRE HARNESS)
AC LINE
AC NEUTRAL
T1 6700046
BR1 PH-60
FLOATING GND
+170Vdc (SOURCE)
Vreg
U5 CA3130
U6 CA3130
U7 CA3130
U10 6N135
Q1 IF344
Q2 2N2222
Q3 2N2907A
Q4 MTP3N60F1
Q5 2N2222
Q6 2N2222
Q7 MCR218-6FP
Q8 2N2222
CR5 1N4937
CR7 1N4937
CR10 1N5245B 15V
CR11 1N4148
CR12 HP2800
CR13 1N4148
CR21 1N4148
TP1
TP2
TP4
TP5
W1
W2
W3
E1
E2
E3
E4
E7
E8
PWR SUPPLY (55000)
PCB 1700-9020-400
PCB ASSY 7010-9030-400
PWR SUPPLY (54000)
MECH ASSY 7005-9040-300

F G H J K L

DATE	REV	CHANGE	ILLUS.	APPV
11-12-92	A	DESIGN RELEASE	J.I.M	SL

+12V REGULATOR

+15V & -15V RECT AND FILT

+5V RECT AND FILT

ERROR AMP

P/O J11001 (MAIN WIRE HARNESS)

NOTES:
(UNLESS OTHERWISE SPECIFIED)

1. ALL REFERENCE NUMBERS CARRY AN ASSIGNED DESIGNATOR SERIES
   THIS SCHEMATIC CARRIES SERIES:
   7005-9040-400 54000
   7010-9030-400 55000
2. ALL RESISTORS ARE 5 %, 1/8 W.
3. ALL RESISTANCE IS EXPRESSED IN OHMS.
   ALL CAPACITANCE IS EXPRESSED IN MICROFARADS
4. HIGHEST REFERENCE DESIGNATIONS.
   C31 R46 L4 CR26 Q9 U10 T2 BR1 W3 TP5
5. REFERENCE DESIGNATIONS NOT USED.
   C13, CR6, R44, TP3, U2, U4

CAUTION:
CONTAINS PARTS AND ASSEMBLIES SUSCEPTIBLE TO DAMAGE BY ELECTROSTATIC DISCHARGE (ESD).

IFR SYSTEMS INC
10200 West York St., Wichita, Kansas 67215

DRAWN D HARDER	DATE 9-4-91	TITLE: CIRCUIT SCHEMATIC MECH PWR SUPPLY
CHECKED P HARRIS	DATE 1-14-92	
APPROVED J SCHMIDT	DATE 12-4-91	SIZE D · DWG NO 0000-9040-400 · REV A
SCALE	DO NOT SCALE	FSCM 51190 · SHEET 1 OF 2

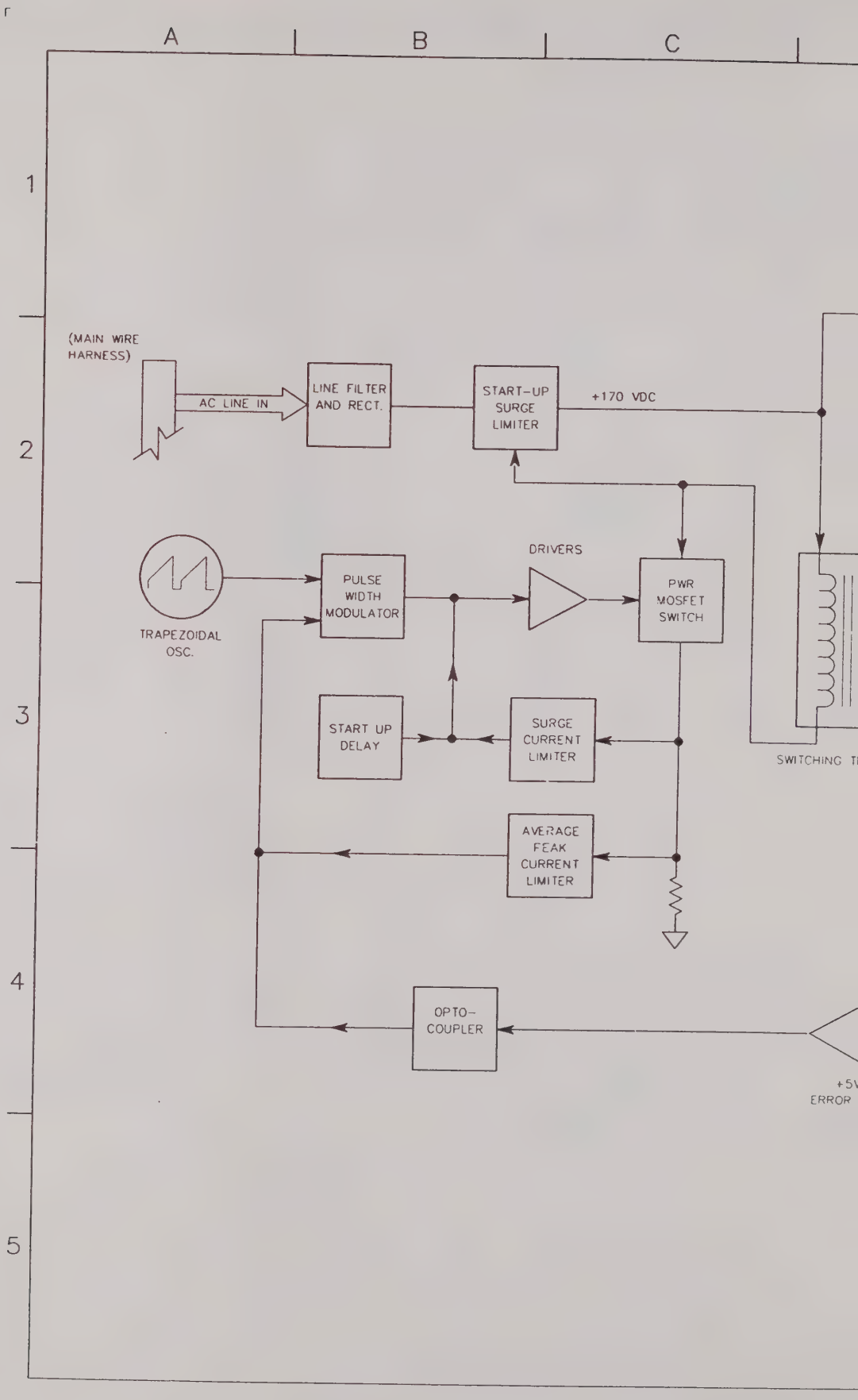
A
B
C
1
2
3
4
5
(MAIN WIRE HARNESS)
AC LINE IN
LINE FILTER AND RECT.
START-UP SURGE LIMITER
+170 VDC
DRIVERS
PULSE WIDTH MODULATOR
PWR MOSFET SWITCH
TRAPEZOIDAL OSC.
START UP DELAY
SURGE CURRENT LIMITER
SWITCHING T
AVERAGE PEAK CURRENT LIMITER
OPTO-COUPLER
+5V
ERROR

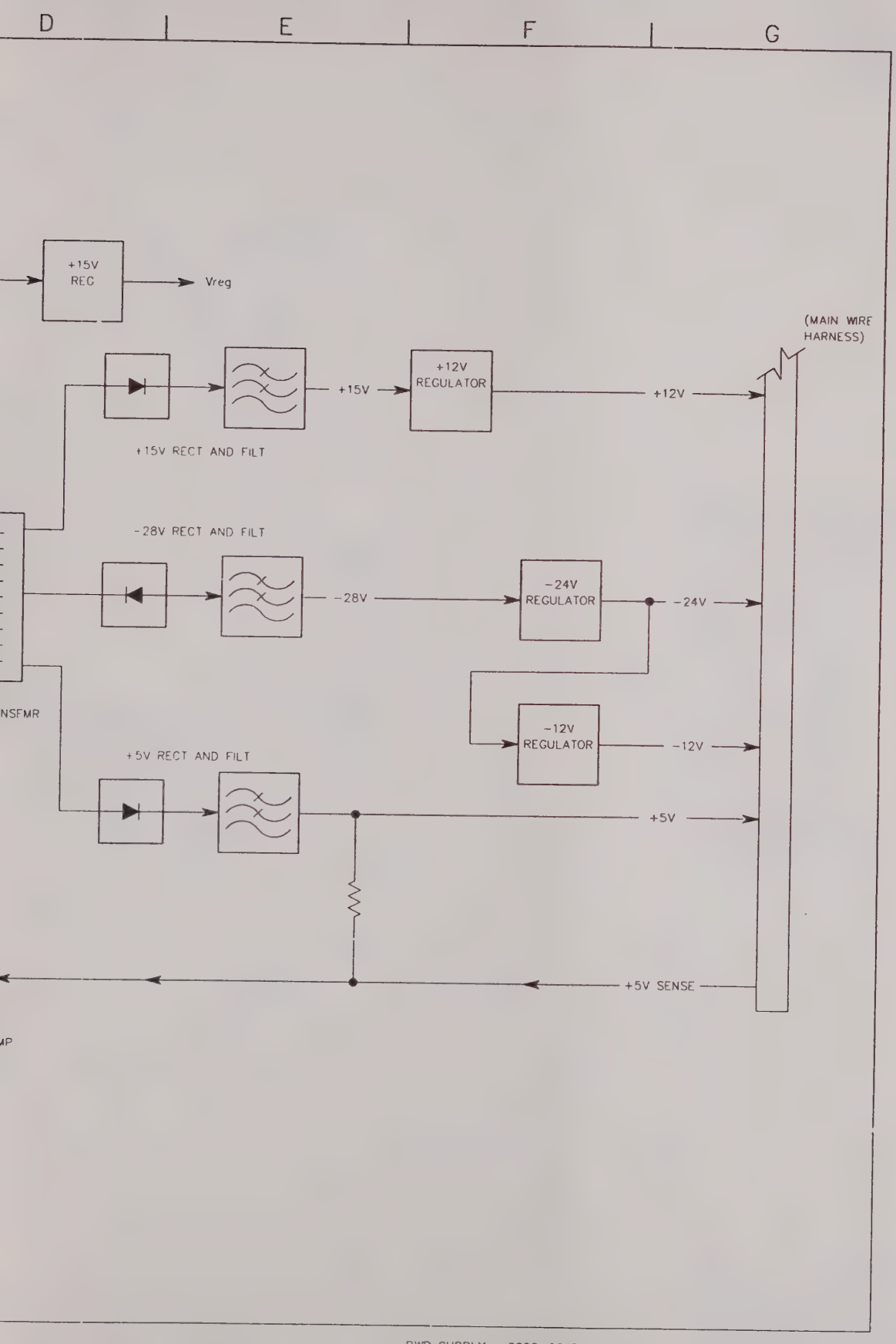
D
E
F
G
+15V
REC
Vreg
(MAIN WIRE
HARNESS)
+15V
+12V
REGULATOR
+12V
+15V RECT AND FILT
-28V RECT AND FILT
-28V
-24V
REGULATOR
-24V
NSFMR
-12V
REGULATOR
-12V
+5V RECT AND FILT
+5V
+5V SENSE

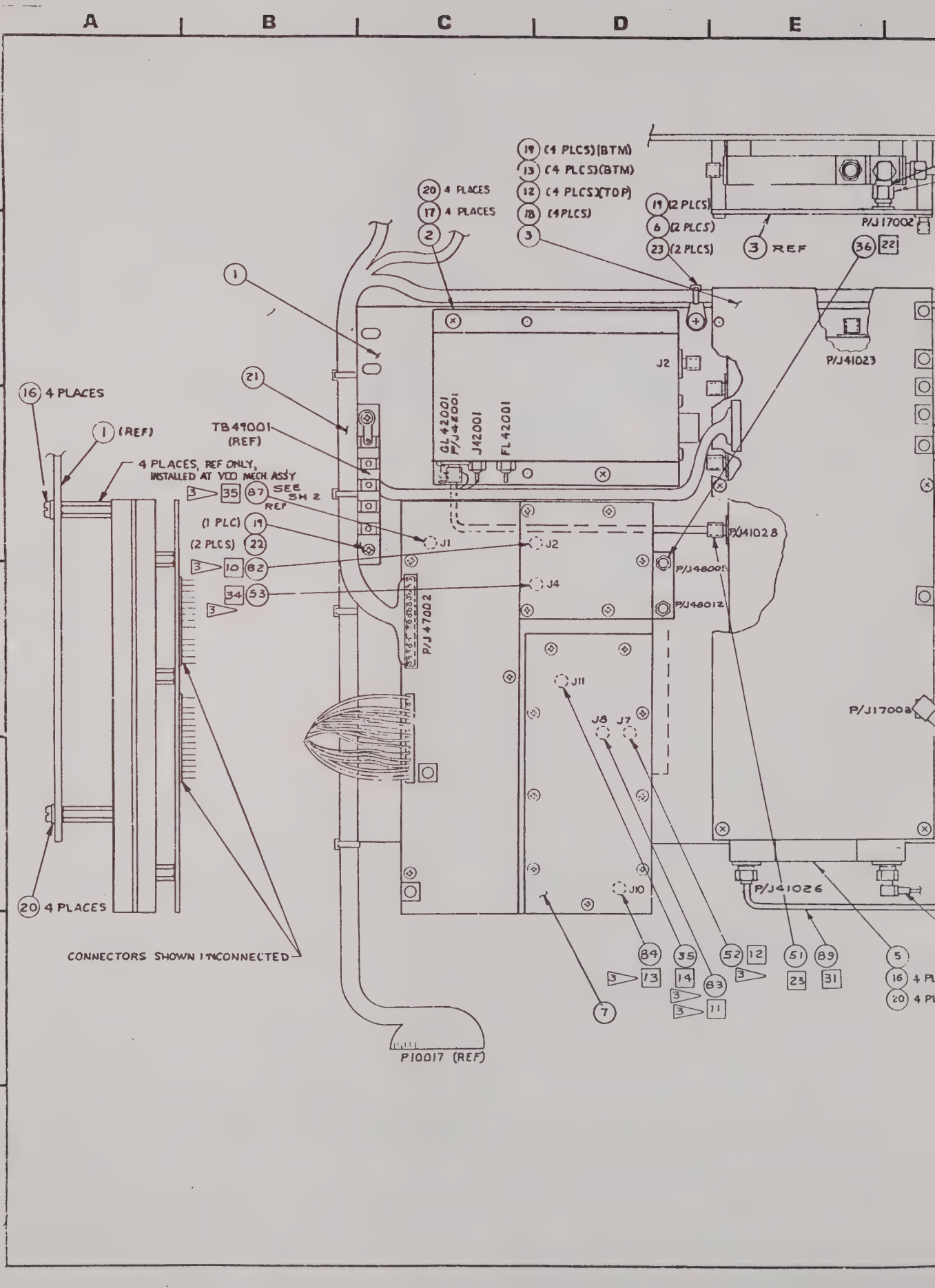
A
B
C
D
E
1
2
3
4
5
6
7
(19) (4 PLCS) (BTM)
(13) (4 PLCS) (BTM)
(12) (4 PLCS) (TOP)
(18) (4 PLCS)
(3)
(20) 4 PLACES
(17) 4 PLACES
(2)
(19) (2 PLCS)
(6) (2 PLCS)
(23) (2 PLCS)
(3) REF
(36) (22)
P/J17002
P/J41023
(1)
(21)
(16) 4 PLACES
(1) (REF)
TB49001 (REF)
4 PLACES, REF ONLY, INSTALLED AT YOO MECH ASSY
3 (35) (87) SEE SH 2 REF
(1 PLC) (19)
(2 PLCS) (22)
3 (10) (82)
(34) (53)
3
J2
GL42001 P/J42001
J42001
FL42001
J1
J2
J4
P/J41028
P/J48005
P/J48012
P/J47002
J11
J8
J7
J10
P/J17003
P/J41026
(20) 4 PLACES
CONNECTORS SHOWN UNCONNECTED
(84) (35) (52) (12) (51) (89) (5)
3 (13) (14) (83) 3 (23) (31) (16) 4 PL
3 (11) (20) 4 PL
(7)
P10017 (REF)

F G H J K L

DATE	REV	CHANGE	APVD
2-14-92	A	DESIGN RELEASE	SL
3-18-92	A-1	INC REF L118	AO SL
4-10-92	A-2	INC REF L122	AO SL
5-14-92	A-3	INC REF L134	AO SL

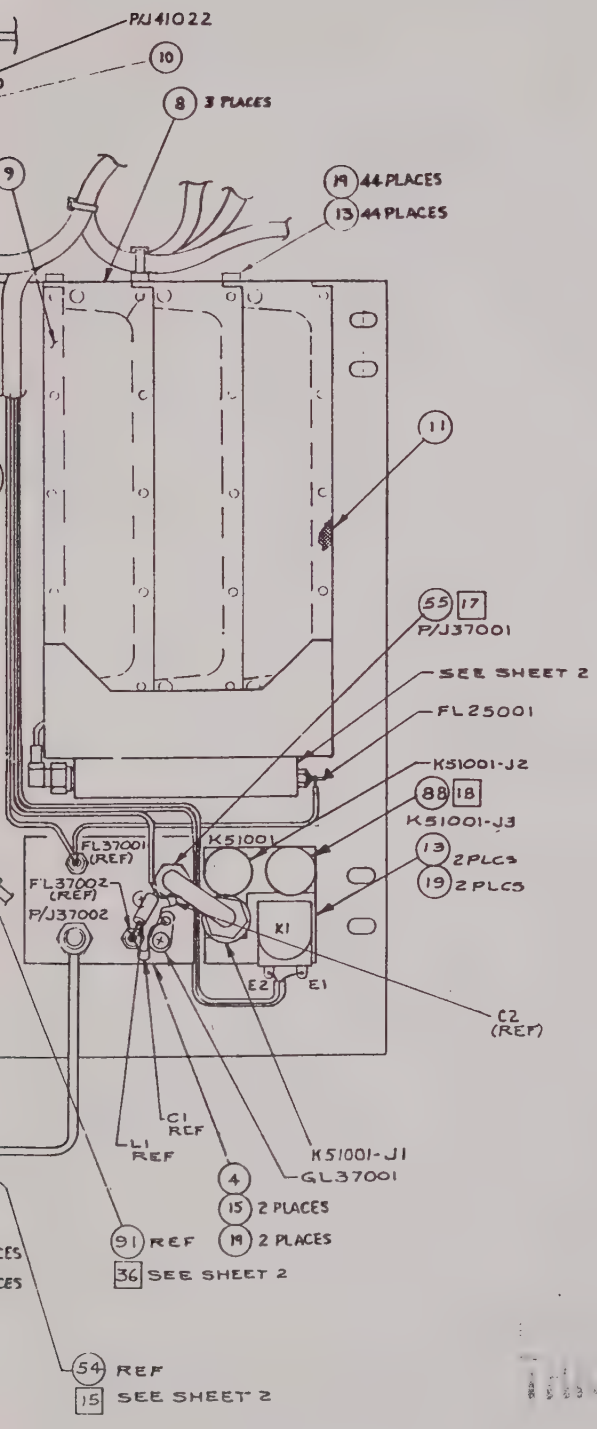

NOTES:

1. ALL REFERENCE DESIGNATORS CARRY AN ASSIGNED DESIGNATOR SERIES. THIS DRAWING CARRIES SERIES 51XXX (e.g., GL1 IS GL51001).

2. REF INTERCONNECT 0000-9040-700.

3. MOUNT THE FOLLOWING CABLES BEFORE INSTALLING THE VCO TO THE FLOOR ASSY:

COAX. TAG NO.	CONNECTOR
10	J48002
11	J48008
12	J48007
13	J48010
14	J48011
34	J48004
35	J48001

4. [XX] INDICATES WIRE TAG NO.

5. FOR COAX RUNNING LIST, SEE SHEET NO. 2.

	-IFR INC-	
DRAWN OSBURN 1-16-92	TITLE MECH ASSY-FLOOR	
CHECKED S.LEONARD 2-14-92		
APPROVED P.HARRIS 2-14-92	SIZE D	DWG NO 7005-9040-700 REV A-3
	SCALE 1:1	CODE IDENT 51180 WEIGHT ~ SHEET 1 OF 2

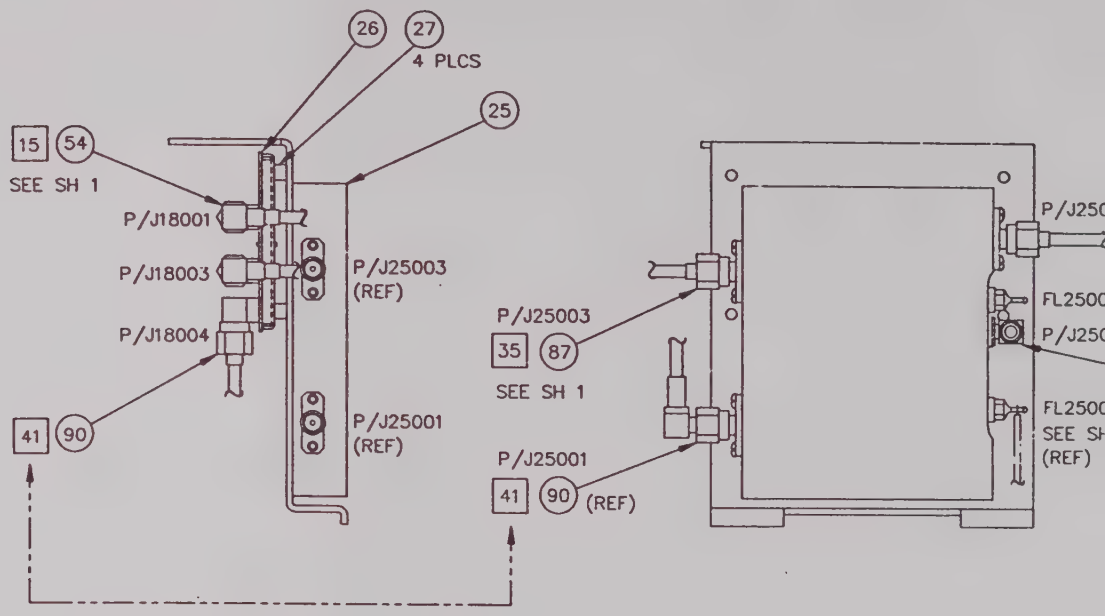

P/J25001 AND P/J25003 OMITTED FROM THIS VIEW FOR CLARITY

WIRE RUNNING LIST				
TERMINAL	NOTE	TERMINAL	AWG	COLOR
FL25001		FL37001	26	RED

F | G | H | J | K | L

DATE	REV	CHANGE	APVD
		SEE SHEET 1	

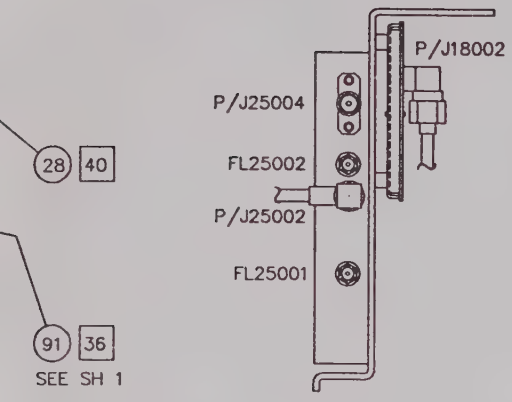

COAX RUNNING LIST

COAX TAG	FROM ASSEMBLY	FROM CONNECTOR	TO ASSEMBLY	TO CONNECTOR	DWG ITEM	D/P/N
10	VCO	J48002	PRESCALER (FINAL TEST)	J23002	82	6042-4985-700
11	VCO	J48008	AT10002 (COMPOSITE)	AT2-J2	83	6042-4986-000
12	VCO	J48007	IF GEN (FINAL TEST)	J53003	52	6050-0931-650
13	VCO	J48010	AT10003 (COMPOSITE)	AT3-J2	84	6042-4985-800
14	VCO	J48011	AT10003 (COMPOSITE)	AT3-J1	85	6042-4985-900
15	X-BAND	J41027	COUPLER/SPLITTER	J18001	54	6050-0930-850
17	MAIN DIODE SW	J37001	RELAY K51001 (FLOOR)	K1-J1	55	6042-4980-300
18	RELAY/COMM	K51001-J3	AT10001 (COMPOSITE)	AT1-J2	88	6042-9080-800
22	VCO (FM/TUNE)	J48005	DISCRIM NO. 1 (COMPOSITE)	J50006	36	6050-0042-220
23	X-BAND	J41028	8.25 GHZ (FLOOR)	J42001	51	6042-4986-400
31	X-BAND	J41026	MAIN DIODE SW (FLOOR)	J37002	89	6042-4980-500
34	VCO	J48004	MECH CARD CAGE ITEM NO. 7	J49001	53	6042-9080-900
35	VCO NO. 2	J48001	HET. BLOCK	J25003	87	6042-9080-[illegible]00
36	HET BLK	J25002	VIDEO BOARD	J17008	91	6050-0040-700
40	HET BLK	J25004	REAR PANEL VCO	P11004	28	6042-9080-500
41	COUPLER/SPLIT	J18004	HET. BLOCK	J25001	90	6050-0930-375

IFR SYSTEMS INC
10200 West York St., Wichita, Kansas 67215

DRAWN	DATE
A. OSBURN	1-14-92
CHECKED	DATE
S. LEONARD	2-14-92
APPROVED	DATE
P. HARRIS	2-14-92

TITLE: MECH ASSY FLOOR

SIZE	DWG. NO.	REV
D	7005-9040-700	A3

SCALE 1=1 | DO NOT SCALE | CAGE 51190 | SHEET 2 OF 2

LI,283,2.MDATAB01 IFR SYSTEMS, INC.
MON, JAN 4, 1993, 12:46 PM

BILL OF MATERIAL LISTED BY REFERENCE DESIGNATOR
AS OF ALL DATES

REQUES

ASSEMBLY PART NO.: 7005-9040-700
DESCRIPTION: MECH ASSY,FLOOR
ITEM MASTER REV: A4 ECO NO: #L143
REV OF THIS BOM: DATE OF LAST ECO: 09/03/92

STATUS	REFERENCE DESIGNATOR	QUANTITY PER ASSY	PART NUMBER	DESCRIPTION	EFFE
ACTIVE	*01	1.00	1406-9050-300	FLOOR, PLATE RD-301A	00/0
ACTIVE	*02	1.00	5850-8251-600	OSC,PL, 8.25GHZ,-24.0VDC,+7DBM	00/0
ACTIVE	*03	1.00	7010-9030-500	PCB ASSY,VIDEO	00/0
ACTIVE	*04	1.00	7005-4940-900	MECH ASSY,MAIN DIODE SWITCH	00/0
ACTIVE	*05	1.00	2517-2511-700	X-BAND FRONT END MICROWAVE	00/0
ACTIVE	*06	2.00	2803-0375-006	SCREW, 4-40 X 3/8 PPHM	00/0
ACTIVE	*07	1.00	7005-9041-200	MECH ASSY, VCO	00/0
ACTIVE	*08	3.00	2100-2515-900	BLOCK 3	00/0
ACTIVE	*09	1.00	2506-2516-000	PLATE END 2	00/0
ACTIVE	*10	1.00	2200-0110-400	CONN,ADAPT,M2M SMA,RIGHT ANGLE	00/0
ACTIVE	*11	1.00	2525-4952-000	GASKET,RF,FLOOR MODULES	00/0
ACTIVE	*12	4.00	2803-0250-006	SCREW,4-40 X 1/4 PPHM	00/0
ACTIVE	*13	50.00	2803-0313-006	SCREW,4-40 X 5/16 PPHM	00/0
ACTIVE	*15	2.00	2803-0625-006	SCREW,4-40 X 5/8 PPHM	00/0
ACTIVE	*16	8.00	2804-0375-006	SCREW,6-32 X 3/8 PPHM	00/0
ACTIVE	*17	4.00	2804-0438-006	SCREW,6-32 X 7/16 PPHM	00/0
ACTIVE	*18	4.00	2800-7600-187	SPACER,AL,.25HEX,4-40ID,1.17LG	00/0
ACTIVE	*19	58.00	2840-0000-003	WASHER,LOCK,INT TOOTH,4	00/0
ACTIVE	*20	12.00	2840-0000-001	WASHER,LOCK,INT TOOTH,6	00/0
ACTIVE	*21	1.00	7007-9080-200	WIRE HARN ASSY,MAIN RD-301A	00/0
ACTIVE	*22	2.00	2803-0500-006	SCREW,4-40 X 1/2 PPHM	00/0
ACTIVE	*23	2.00	2109-0000-007	CLAMP CABLE TYRAP TY34M.8	00/0

LI,283,2:MDATAB01 IFR SYSTEMS, INC.
MON, JAN 4, 1993, 12:46 PM

BILL OF MATERIAL LISTED BY REFERENCE DESIGNATOR
AS OF ALL DATES

ASSEMBLY PART NO.: 7005-9040-700
DESCRIPTION: MECH ASSY,FLOOR
ITEM MASTER REV: A4 ECO NO: #L143
REV OF THIS BOM: DATE OF LAST ECO: 09/03/92

STATUS	REFERENCE DESIGNATOR	QUANTITY PER ASSY	PART NUMBER	DESCRIPTION	EFFE
ACTIVE	*25	1.00	7005-9040-200	MECH ASSY,HETERODYNE	00/0
ACTIVE	*26	1.00	7005-9040-300	MECH ASSY, COUPLER/SPLITTER	00/0
ACTIVE	*27	4.00	2801-0188-006	SCREW 2-56 X 3/16 PBHMS	00/0
ACTIVE	*28	1.00	7010-9030-700	PCB ASSY, BUFFER AMP	00/0
ACTIVE	*SCHEM	.00	DWG-0000-9040-700	INTERCONNECT, FLOOR RD-301A	00/0
ACTIVE	K51001	1.00	4501-0000-009	RELAY AMP. 315-10002-3	00/0
ACTIVE	TAG#10	1.00	6042-4985-700	COAX ASSY,086 SR,VCO TO PRSCLR	00/0
ACTIVE	TAG#11	1.00	6042-4986-000	COAX ASSY - VCO TO MAIN ATTEN	00/0
ACTIVE	TAG#12	1.00	6050-0931-650	COAX ASSY,316,R M SMA/R M SMA	00/0
ACTIVE	TAG#13	1.00	6042-4985-800	COAX ASSY-VCO TO R2 ATTEN	00/0
ACTIVE	TAG#14	1.00	6042-4985-900	COAX ASSY - R2 ATTEN TO VCO	00/0
ACTIVE	TAG#15	1.00	6050-0930-850	COAX ASSY,316,R M SMA/R M SMA	00/0
ACTIVE	TAG#17	1.00	6042-4980-300	COAX ASSY,SR.086,RLY--DIODE SW	00/0
ACTIVE	TAG#18	1.00	6042-9080-800	COAX ASSY,SR.086 RELAY-ATTEN	00/0
ACTIVE	TAG#22	1.00	6050-0042-050	COAX ASSY,316,R F SMB/R F SMB	00/0
ACTIVE	TAG#23	1.00	6042-4986-400	COAX ASSY - 8.25GHZ TO X-BAND	00/0
ACTIVE	TAG#31	1.00	6042-4980-500	COAX ASSY,SR.086,DIO SW*X-BAND	00/0
ACTIVE	TAG#34	1.00	6042-9080-900	COAX ASSY,SR.086 VCO-DSCRM	00/0
ACTIVE	TAG#35	1.00	6042-9080-400	COAX ASSY,SR.086 VCO-HET BLOCK	00/0
ACTIVE	TAG#36	1.00	6050-0040-700	COAX ASSY,316,R F SMB/R F SMB	00/0
ACTIVE	TAG#40	1.00	6042-9080-500	COAX ASSY,SR.086 HET-R PNL VCO	00/0
ACTIVE	TAG#41	1.00	6050-0930-375	COAX ASSY,316,R M SMA/R M SMA	00/0

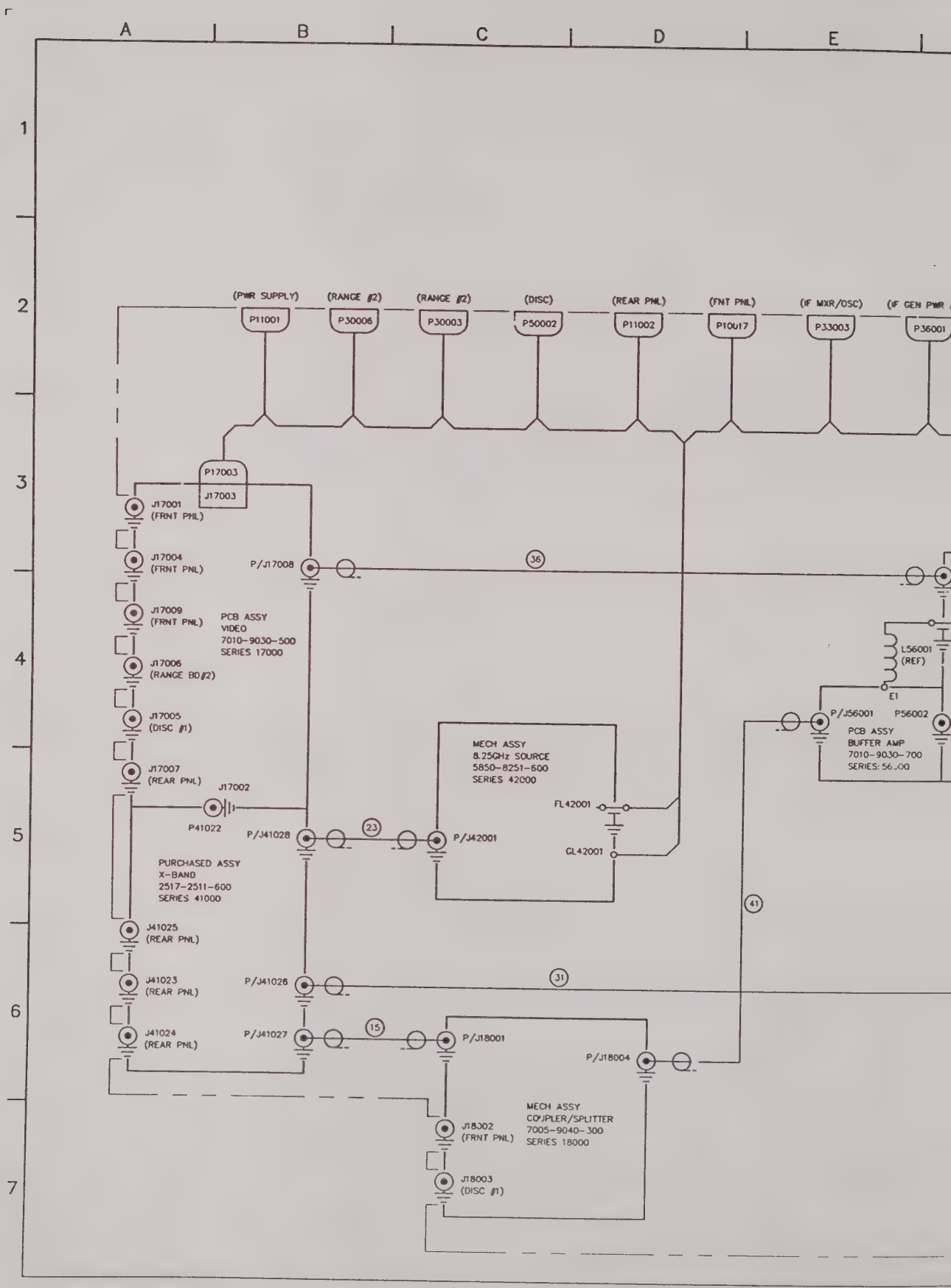
A
B
C
D
E
1
2
3
4
5
6
7
(PWR SUPPLY)
P11001
(RANGE #2)
P30006
(RANGE #2)
P30003
(DISC)
P50002
(REAR PNL)
P11002
(FNT PNL)
P10017
(IF MXR/OSC)
P33003
(IF GEN PWR
P36001
P17003
J17003
J17001
(FRNT PNL)
J17004
(FRNT PNL)
P/J17008
36
J17009
(FRNT PNL)
PCB ASSY
VIDEO
7010-9030-500
SERIES 17000
J17006
(RANGE BD #2)
J17005
(DISC #1)
J17007
(REAR PNL)
J17002
P41022
P/J41028
23
P/J42001
MECH ASSY
8.25GHz SOURCE
5850-8251-600
SERIES 42000
FL42001
GL42001
PURCHASED ASSY
X-BAND
2517-2511-600
SERIES 41000
J41025
(REAR PNL)
J41023
(REAR PNL)
P/J41026
31
J41024
(REAR PNL)
P/J41027
15
P/J18001
P/J18004
41
MECH ASSY
COUPLER/SPLITTER
7005-9040-300
SERIES 18000
J18002
(FRNT PNL)
J18003
(DISC #1)
L56001
(REF)
E1
P/J56001
P56002
PCB ASSY
BUFFER AMP
7010-9030-700
SERIES: 56000

F G H J K L

DATE	REV	CHANGE	APPROVED
5-13-92	A	DESIGN RELEASE	J.I.M. SL
9-1-92	A1	INC REF #L143	J.I.M. SL

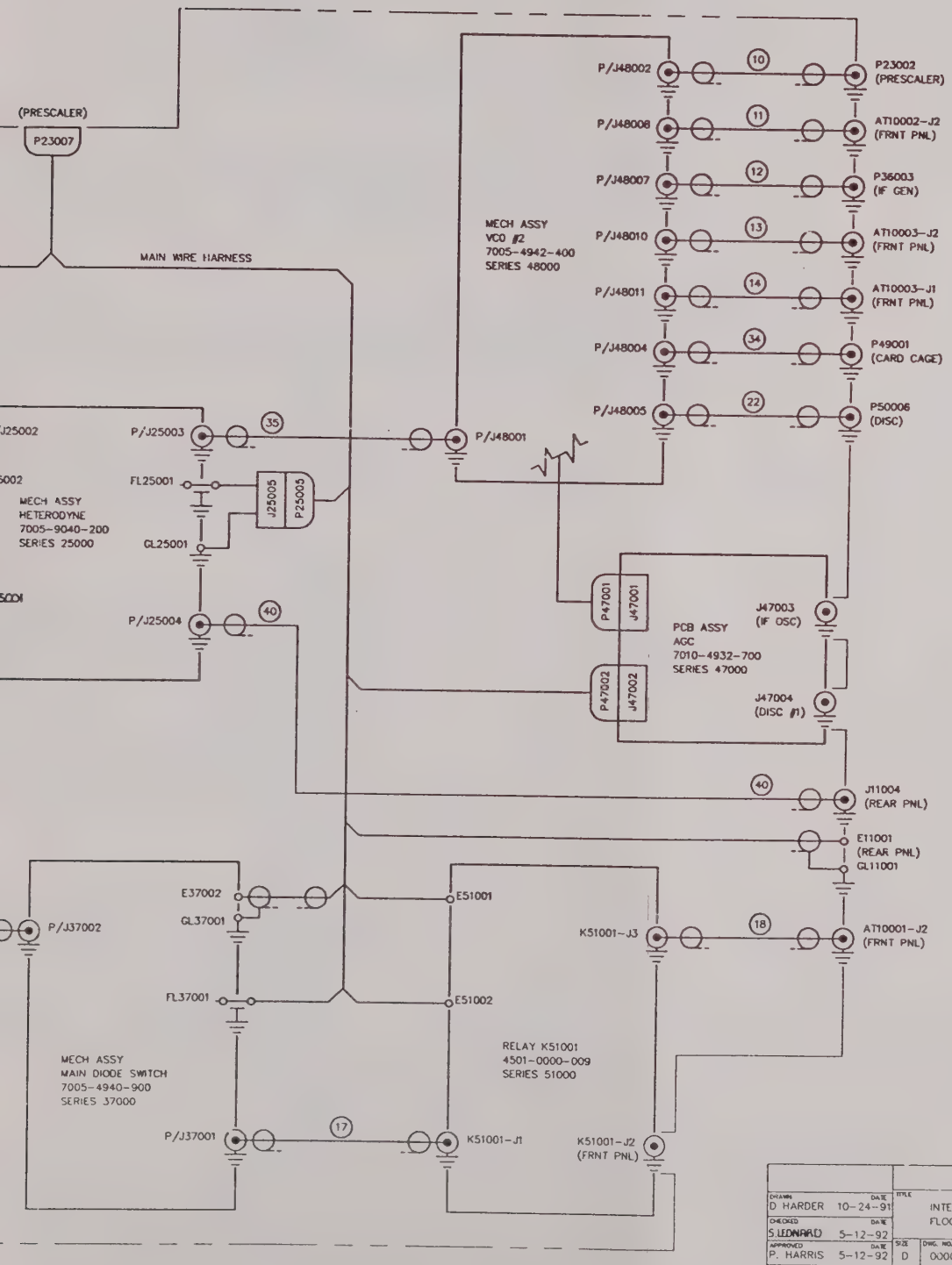

		IFR SYSTEMS INC 10200 West York St., Wichita, Kansas 67215
DRAWN D HARDER	DATE 10-24-91	TITLE INTERCONNECT FLOOR, RD-301A
CHECKED S LEONARD	DATE 5-12-92	
APPROVED P. HARRIS	DATE 5-12-92	SIZE D DWG. NO. 0000-9040-700 REV A1
SCALE	DO NOT SCALE	FSCM 51190 SHEET 1 OF 2

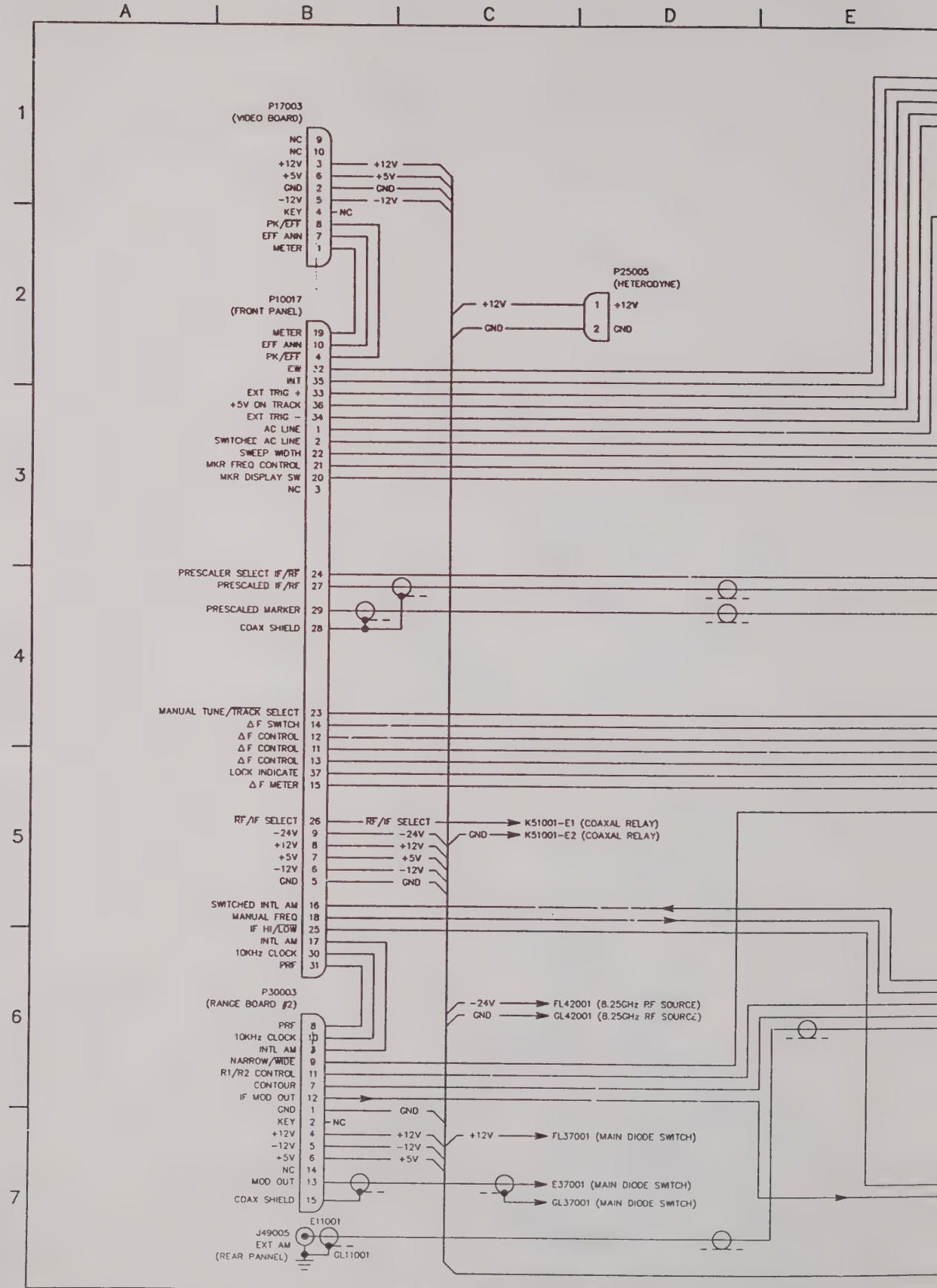
A
B
C
D
E
1
2
3
4
5
6
7
P17003
(VIDEO BOARD)
NC 9
NC 10
+12V 3
+5V 6
GND 2
-12V 5
KEY 4
PK/EFF 8
EFF ANN 7
METER 1
+12V
+5V
GND
-12V
NC
P10017
(FRONT PANEL)
METER 19
EFF ANN 10
PK/EFF 4
CW 32
INT 35
EXT TRIG + 33
+5V ON TRACK 36
EXT TRIG - 34
AC LINE 1
SWITCHED AC LINE 2
SWEEP WIDTH 22
MKR FREQ CONTROL 21
MKR DISPLAY SW 20
NC 3
P25005
(HETERODYNE)
+12V 1 +12V
GND 2 GND
PRESCALER SELECT IF/RF 24
PRESCALED IF/RF 27
PRESCALED MARKER 29
COAX SHIELD 28
MANUAL TUNE/TRACK SELECT 23
ΔF SWITCH 14
ΔF CONTROL 12
ΔF CONTROL 11
ΔF CONTROL 13
LOCK INDICATE 37
ΔF METER 15
RF/IF SELECT 26
-24V 9
+12V 8
+5V 7
-12V 6
GND 5
RF/IF SELECT
-24V
+12V
+5V
-12V
GND
K51001-E1 (COAXAL RELAY)
GND
K51001-E2 (COAXAL RELAY)
SWITCHED INTL AM 16
MANUAL FREQ 18
IF HI/LOW 25
INTL AM 17
10KHz CLOCK 30
PRF 31
P30003
(RANGE BOARD #2)
PRF 8
10KHz CLOCK 10
INTL AM 3
NARROW/WIDE 9
R1/R2 CONTROL 11
CONTOUR 7
IF MOD OUT 12
GND 1
KEY 2
+12V 4
-12V 5
+5V 6
NC 14
MOD OUT 13
COAX SHIELD 15
GND
NC
+12V
-12V
+5V
-24V
GND
FL42001 (8.25GHz RF SOURCE)
GL42001 (8.25GHz RF SOURCE)
+12V
FL37001 (MAIN DIODE SWITCH)
E37001 (MAIN DIODE SWITCH)
GL37001 (MAIN DIODE SWITCH)
E11001
J49005
EXT AM
(REAR PANNEL)
GL11001

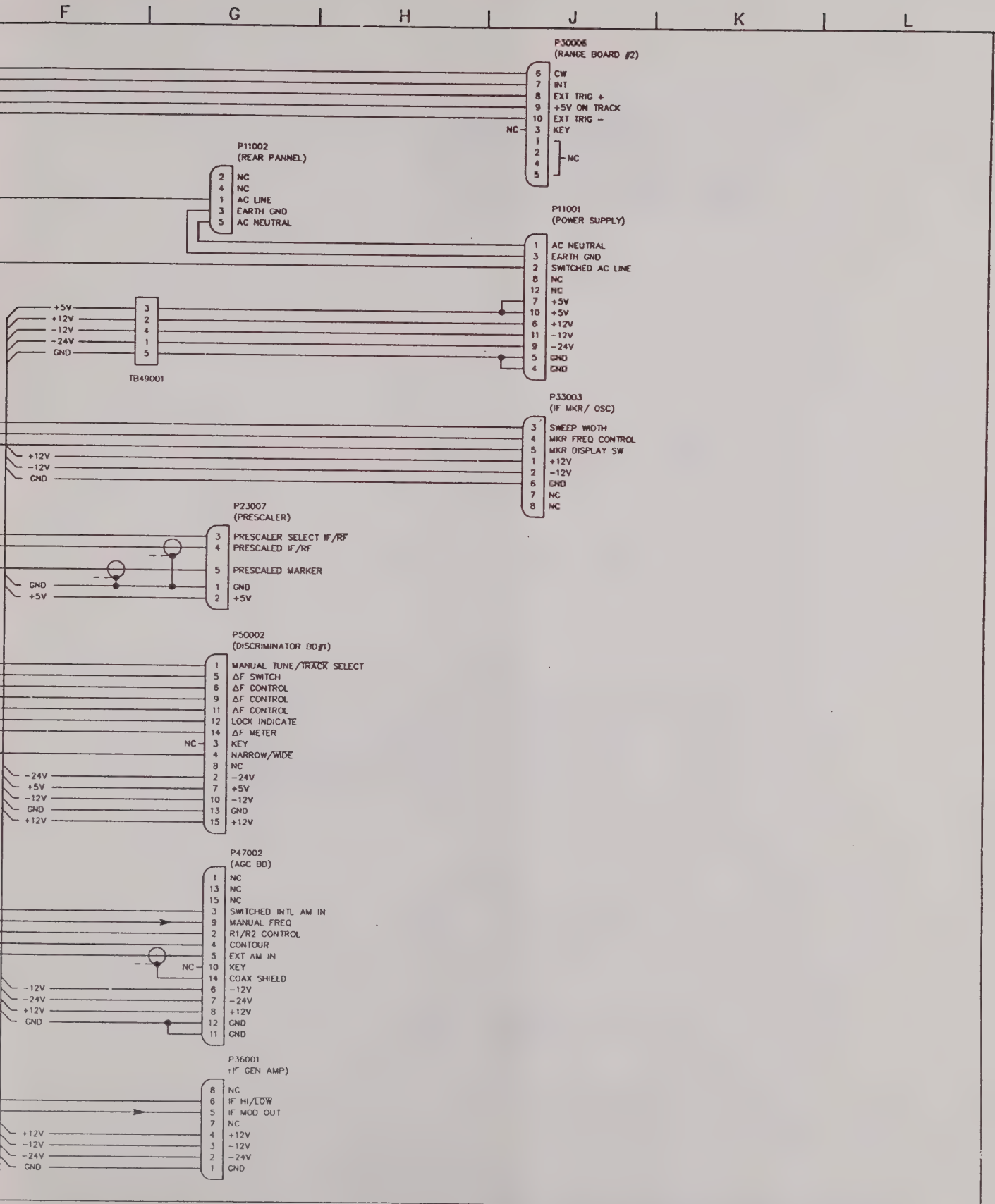
F
G
H
J
K
L
P30006
(RANGE BOARD #2)
6 CW
7 INT
8 EXT TRIG +
9 +5V ON TRACK
10 EXT TRIG –
NC 3 KEY
1
2
4
5 NC
P11002
(REAR PANNEL)
2 NC
4 NC
1 AC LINE
3 EARTH GND
5 AC NEUTRAL
P11001
(POWER SUPPLY)
1 AC NEUTRAL
3 EARTH GND
2 SWITCHED AC LINE
8 NC
12 NC
7 +5V
10 +5V
6 +12V
11 –12V
9 –24V
5 GND
4 GND
+5V
+12V
–12V
–24V
GND
3
2
4
1
5
TB49001
P33003
(IF MKR/ OSC)
3 SWEEP WIDTH
4 MKR FREQ CONTROL
5 MKR DISPLAY SW
1 +12V
2 –12V
6 GND
7 NC
8 NC
+12V
–12V
GND
P23007
(PRESCALER)
3 PRESCALER SELECT IF/RF
4 PRESCALED IF/RF
5 PRESCALED MARKER
1 GND
2 +5V
GND
+5V
P50002
(DISCRIMINATOR BD#1)
1 MANUAL TUNE/TRACK SELECT
5 ΔF SWITCH
6 ΔF CONTROL
9 ΔF CONTROL
11 ΔF CONTROL
12 LOCK INDICATE
14 ΔF METER
NC 3 KEY
4 NARROW/WIDE
8 NC
2 –24V
7 +5V
10 –12V
13 GND
15 +12V
–24V
+5V
–12V
GND
+12V
P47002
(AGC BD)
1 NC
13 NC
15 NC
3 SWITCHED INTL AM IN
9 MANUAL FREQ
2 R1/R2 CONTROL
4 CONTOUR
5 EXT AM IN
NC 10 KEY
14 COAX SHIELD
6 –12V
7 –24V
8 +12V
12 GND
11 GND
–12V
–24V
+12V
GND
P36001
(IF GEN AMP)
8 NC
6 IF HI/LOW
5 IF MOD OUT
7 NC
4 +12V
3 –12V
2 –24V
1 GND
+12V
–12V
–24V
GND

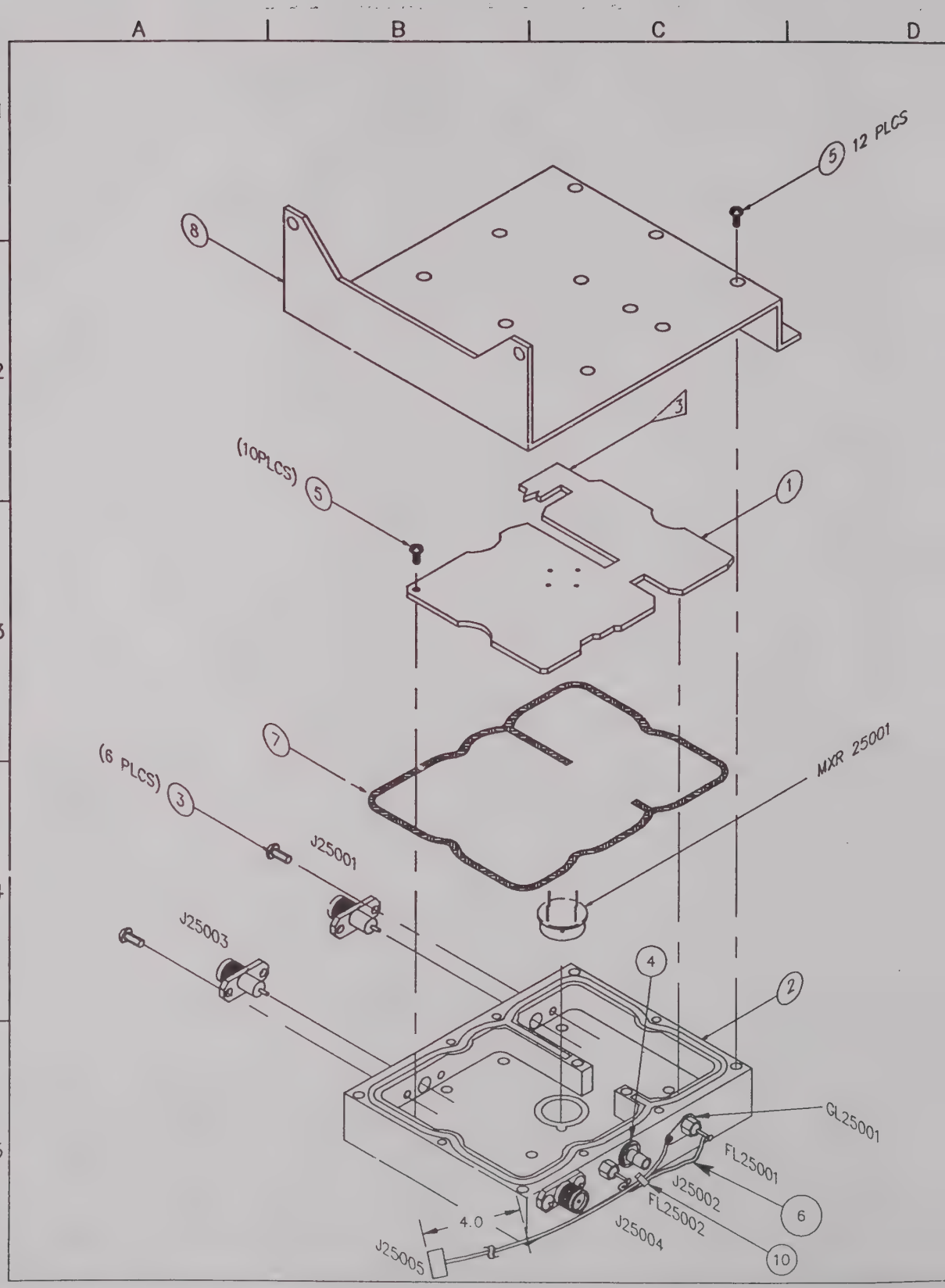
A
B
C
D
1
2
3
4
5
8
5 12 PLCS
3
(10PLCS) 5
1
7
(6 PLCS) 3
J25001
MXR 25001
J25003
4
2
GL25001
FL25001
J25002
FL25002
6
10
4.0
J25004
J25005

E F G

DATE	REV	CHANGE		APVD
1-12-92	A	DESIGN RELEASE		SL
3/23/92	A1	INC. REF. #L121		SL
4/23/92	B	INC REF #L128	RH	SL
5/14/92	B1	INC REF #L134	RH	SL
09-02-92	B-2	INC REF #L143	AO	SL

NOTES:

1. ALL REFERENCE DESIGNATORS CARRY AN ASSIGNED DESIGNATOR SERIES, THIS DWG. CARRIES SERIES 24000 (i.e., R1 IS R24001).

2. REFERENCE SCHEMATIC IS 0000--9040-200

3 CUT AWAY BORDER AS INDICATED, 6 PLCS BEFORE INSTALLING PCB ASSY.

WIRE RUNNING LIST

FROM		TO		WIRE			
TERMINAL	NOTES	TERMINAL	NOTES	COLOR	AWG	LG	NOTES
FL25001	+12V	FL25002		RED	22		
J25005-1	+12V	FL25001		RED	26		
J25005-2	GND	GL25001		BLK	26		

CAUTION:
CONTAINS PARTS AND ASSEMBLIES SUSCEPTIBLE TO DAMAGE BY ELECTROSTATIC DISCHARGE (ESD).

TOLERANCES: (UNLESS OTHERWISE SPECIFIED)	MATERIAL
ALL DIMENSIONS APPLY AFTER FINISH SURFACE FINISH: REMOVE ALL BURRS DECIMALS: .XXX= ± .010 .XXXX=± .005C ANGLES: ±1/2DEG.	SEE NOTES
	FINISH: SEE NOTES

IFR SYSTEMS INC
10200 West York St., Wichita, Kansas 67215

DRAWN: WAW 10\11\91	TITLE: MECH. ASS'Y HETERODYNE BLOCK
CHECKED: J. SCHMIDT 12-20-91	
APPROVED: P. HARRIS 1-11-92	SIZE: C; DWG. NO.: 7005-9040-200; REV: B2
*	SCALE: 1=1; DO NOT SCALE; CAGE 51190; SHEET 1 OF 1

LI,283,2.MDATAB01 IFR SYSTEMS, INC.
MON, JAN 4, 1993, 12:46 PM

BILL OF MATERIAL LISTED BY REFERENCE DESIGNATOR
AS OF ALL DATES

REQUEST

ASSEMBLY PART NO.: 7005-9040-200
DESCRIPTION: MECH ASSY,HETERODYNE
ITEM MASTER REV: B2 ECO NO: #L143
REV OF THIS BOM: DATE OF LAST ECO: 09/03/92

STATUS	REFERENCE DESIGNATOR	QUANTITY PER ASSY	PART NUMBER	DESCRIPTION	EFFEC
ACTIVE		.50	6008-1000-001	WIRE,HOOK,TFE,26GA, 7S,BLACK	00/00
ACTIVE		.50	6008-1000-003	WIRE,HOOK,TFE,26GA, 7S,RED	00/00
ACTIVE	*01	1.00	7010-9030-200	PCB ASSY,HETERODYNE	00/00
ACTIVE	*02	1.00	1415-9050-100	ENCLOSURE, HETERODYNE MODULE	00/00
ACTIVE	*03	6.00	2801-0250-006	SCREW,2-56 X 1/4 PPHM	00/00
ACTIVE	*04	1.00	2840-7600-229	WASHER,ALUM,.310D,.188ID,.038T	00/00
ACTIVE	*05	10.00	2803-0188-006	SCREW,4-40 X 3/16 PPHM	00/00
ACTIVE	*06	.13	6002-0000-003	WIRE,HOOK,TFE,22GA, 7S,RED	00/00
ACTIVE	*07	1.00	1400-9050-200	BRACKET, CPLR/SPLITTER-HET BLK	00/00
ACTIVE	*08	.95	2525-7874-100	GASKET RF,.070 DIA (BLUE) *	00/00
ACTIVE	*09	2.00	2114-9001-001	CONTACT PIN26-22GA.SYM001T0.6*	00/00
ACTIVE	*10	1.00	6004-6005-400	TY-RAP,4.0 LG	00/00
ACTIVE	*SCHEM	.00	DWG-0000-9040-200	SCHEM,HETERODYNE MECH ASSY	00/00
ACTIVE	FL25001	2.00	5801-0000-006	FILTER,EMI/RFI 1500pF 8-32DIA*	00/00
ACTIVE	FL25002	-.--	5801-0000-006	FILTER,EMI/RFI 1500pF 8-32DIA*	00/00
ACTIVE	GL25001	1.00	2850-0000-100	LUG,GND,#8 RT.ANG NON-LOCKING*	00/00
ACTIVE	J25001	3.00	2200-1930-100	CONN,SMA,F,NARROW FLANGE *	00/00
ACTIVE	J25002	1.00	2123-0000-038	CONN,M SMB,W/TERM,STR BULKHD *	00/00
ACTIVE	J25003	-.--	2200-1930-100	CONN,SMA,F,NARROW FLANGE *	00/00
ACTIVE	J25004	-.--	2200-1930-100	CONN,SMA,F,NARROW FLANGE *	00/00
ACTIVE	J25005	1.00	2115-9001-002	CONN,RECT.098 RCPT 2-P *	00/00
ACTIVE	MXR25001	1.00	5250-0804-301	MIXER, 700-1500MHz TO-8 *	00/00

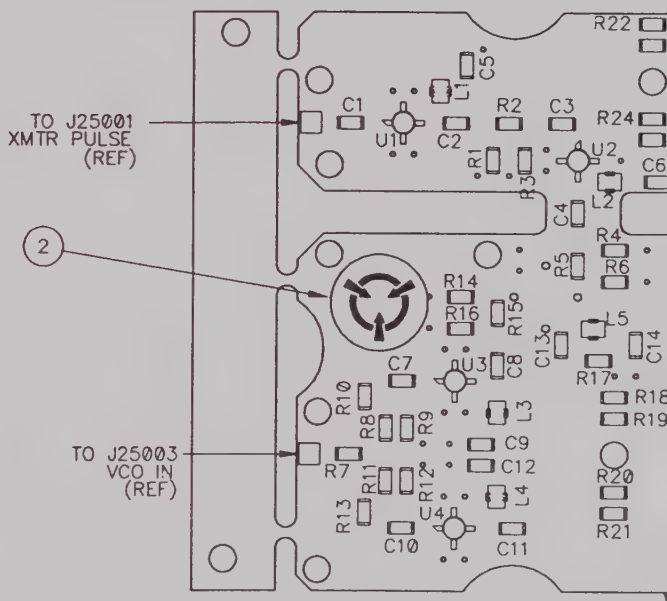
TO J25001
XMTR PULSE
(REF)
2
TO J25003
VCO IN
(REF)
C1
C2
C3
C4
C5
C6
C7
C8
C9
C10
C11
C12
C13
C14
L1
L2
L3
L4
L5
R1
R2
R3
R4
R5
R6
R7
R8
R9
R10
R11
R12
R13
R14
R15
R16
R17
R18
R19
R20
R21
R22
R24
U1
U2
U3
U4

TOP

D | E | F | G

DATE	REV	CHANGE	APVD
11-14-91	B	DESIGN RELEASE WAW	SL

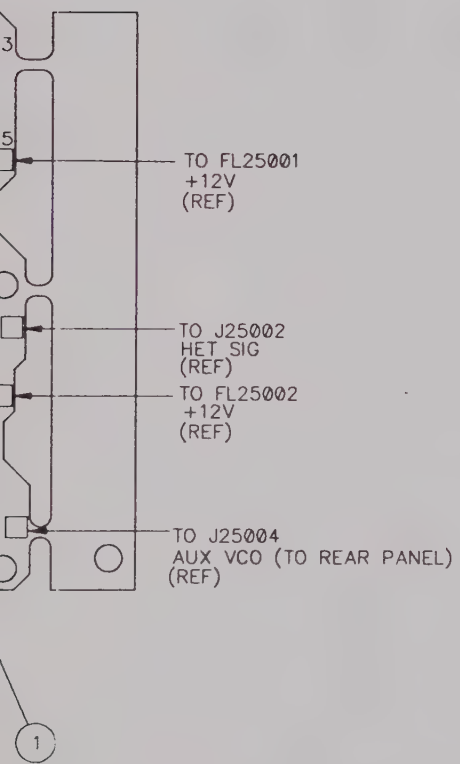

1

NOTES:

1. ALL REFERENCE DESIGNATORS CARRY AN ASSIGNED DESIGNATOR SERIES, THIS DWG. CARRIES SERIES 24000 (i.e., R1 IS R24001).

2. REFERENCE SCHEMATIC: 0000-9040-200

CAUTION:
CONTAINS PARTS AND ASSEMBLIES SUSCEPTIBLE TO DAMAGE BY ELECTROSTATIC DISCHARGE (ESD).

DRAWN / DATE	WAW 10/11/91
CHECKED / DATE	W. REMPE 11-13-91
APPROVED / DATE	J. SCHMIDT 11-14-91

IFR SYSTEMS INC
10200 West York St., Wichita, Kansas 67215

TITLE: P.C. BOARD ASS'Y
HETERODYNE BOARD

SIZE	DWG. NO.	REV
C	7010-9030-200	B

SCALE: 2=1 | DO NOT SCALE | CAGE 51190 | SHEET 1 OF 1

ASSY NO.	REVISION	DESCRIPTION	LAST ECN	DATE INC
7010-9030-200	B	PCB ASSY,HETERODYNE		10/30/71

STAT	REF.DES.	QTY	COMP. PART NO.	DESCRIPTION		EFFECTIVE
ACT	*01	1.00	1700-9020-200	PC BD, HETERODYNE		00/00/00
ACT	*02	1.00	2400-7856-800	LABEL,ESD		00/00/00
ACT	C24001	8.00	1622-0220-001T	CAP, PF 22, 100V, CHIP NPO	*	00/00/00
ACT	C24002	-.--	1622-0220-001T	CAP, PF 22, 100V, CHIP NPO	*	00/00/00
ACT	C24003	-.--	1622-0220-001T	CAP, PF 22, 100V, CHIP NPO	*	00/00/00
ACT	C24004	-.--	1622-0220-001T	CAP, PF 22, 100V, CHIP NPO	*	00/00/00
ACT	C24005	4.00	1622-0102-001T	CAP, PF 1000, 50V, CHIP NPO	*	00/00/00
ACT	C24006	-.--	1622-0102-001T	CAP, PF 1000, 50V, CHIP NPO	*	00/00/00
ACT	C24007	-.--	1622-0220-001T	CAP, PF 22, 100V, CHIP NPO	*	00/00/00
ACT	C24008	-.--	1622-0220-001T	CAP, PF 22, 100V, CHIP NPO	*	00/00/00
ACT	C24009	-.--	1622-0102-001T	CAP, PF 1000, 50V, CHIP NPO	*	00/00/00
ACT	C24010	-.--	1622-0220-001T	CAP, PF 22, 100V, CHIP NPO	*	00/00/00
ACT	C24011	-.--	1622-0220-001T	CAP, PF 22, 100V, CHIP NPO	*	00/00/00
ACT	C24012	-.--	1622-0102-001T	CAP, PF 1000, 50V, CHIP NPO	*	00/00/00
ACT	C24013	2.00	1622-0050-001T	CAP, pF 5.0 50V CHIP	*	00/00/00
ACT	C24014	-.--	1622-0050-001T	CAP, pF 5.0 50V CHIP	*	00/00/00
ACT	L24001	4.00	1811-6391-001T	IND,SM .39UH 10% C 1008	*	00/00/00
ACT	L24002	-.--	1811-6391-001T	IND,SM .39UH 10% C 1008	*	00/00/00
ACT	L24003	-.--	1811-6391-001T	IND,SM .39UH 10% C 1008	*	00/00/00
ACT	L24004	-.--	1811-6391-001T	IND,SM .39UH 10% C 1008	*	00/00/00
ACT	L24005	1.00	1811-6680-001T	IND,SM .068UH 10% C 1008	*	00/00/00
ACT	R24001	2.00	4722-1050-001T	RES, 1% 1/8W 105 OHM	*	00/00/00
ACT	R24002	1.00	4722-6199-001T	RES, 1% 1/8W 61.9 OHM	*	00/00/00
ACT	R24003	-.--	4722-1050-001T	RES, 1% 1/8W 105 OHM	*	00/00/00
ACT	R24004	2.00	4722-1500-001T	RES, 1% 1/8W 150 OHM	*	00/00/00
ACT	R24005	1.00	4722-3659-001T	RES, 1% 1/8W 36.5 OHM	*	00/00/00

ASSY NO.	REVISION	DESCRIPTION	LAST ECN	DATE INC
7010-9030-200	B	PCB ASSY,HETERODYNE		10/30/71

STAT	REF.DES.	QTY	COMP. PART NO.	DESCRIPTION			EFFECTIVE
ACT	R24006	-.--	4722-1500-001T	RES, 1% 1/8W	150	OHM *	00/00/00
ACT	R24007	1.00	4722-1509-001T	RES, 1% 1/8W	15.0	OHM *	00/00/00
ACT	R24008	4.00	4722-4029-001T	RES, 1% 1/8W	40.2	OHM *	00/00/00
ACT	R24009	-.--	4722-4029-001T	RES, 1% 1/8W	40.2	OHM *	00/00/00
ACT	R24010	2.00	4722-2439-001T	RES, 1% 1/8W	24.3	OHM *	00/00/00
ACT	R24011	-.--	4722-4029-001T	RES, 1% 1/8W	40.2	OHM *	00/00/00
ACT	R24012	-.--	4722-4029-001T	RES, 1% 1/8W	40.2	OHM *	00/00/00
ACT	R24013	-.--	4722-2439-001T	RES, 1% 1/8W	24.3	OHM *	00/00/00
ACT	R24014	2.00	4722-2940-001T	RES, 1% 1/8W	294	OHM *	00/00/00
ACT	R24015	1.00	4722-1789-001T	RES, 1% 1/8W	17.8	OHM *	00/00/00
ACT	R24016	-.--	4722-2940-001T	RES, 1% 1/8W	294	OHM *	00/00/00
ACT	R24017	1.00	4722-5119-001T	RES, 1% 1/8W	51.1	OHM *	00/00/00
ACT	R24018	8.00	4722-3650-001T	RES, 1% 1/8W	365	OHM *	00/00/00
ACT	R24019	-.--	4722-3650-001T	RES, 1% 1/8W	365	OHM *	00/00/00
ACT	R24020	-.--	4722-3650-001T	RES, 1% 1/8W	365	OHM *	00/00/00
ACT	R24021	-.--	4722-3650-001T	RES, 1% 1/8W	365	OHM *	00/00/00
ACT	R24022	-.--	4722-3650-001T	RES, 1% 1/8W	365	OHM *	00/00/00
ACT	R24023	-.--	4722-3650-001T	RES, 1% 1/8W	365	OHM *	00/00/00
ACT	R24024	-.--	4722-3650-001T	RES, 1% 1/8W	365	OHM *	00/00/00
ACT	R24025	-.--	4722-3650-001T	RES, 1% 1/8W	365	OHM *	00/00/00
ACT	U24001	4.00	5050-2501-300	IC,MSA-0385,AMPLIFIER			00/00/00
ACT	U24002	-.--	5050-2501-300	IC,MSA-0385,AMPLIFIER			00/00/00
ACT	U24003	-.--	5050-2501-300	IC,MSA-0385,AMPLIFIER			00/00/00
ACT	U24004	-.--	5050-2501-300	IC,MSA-0385,AMPLIFIER			00/00/00

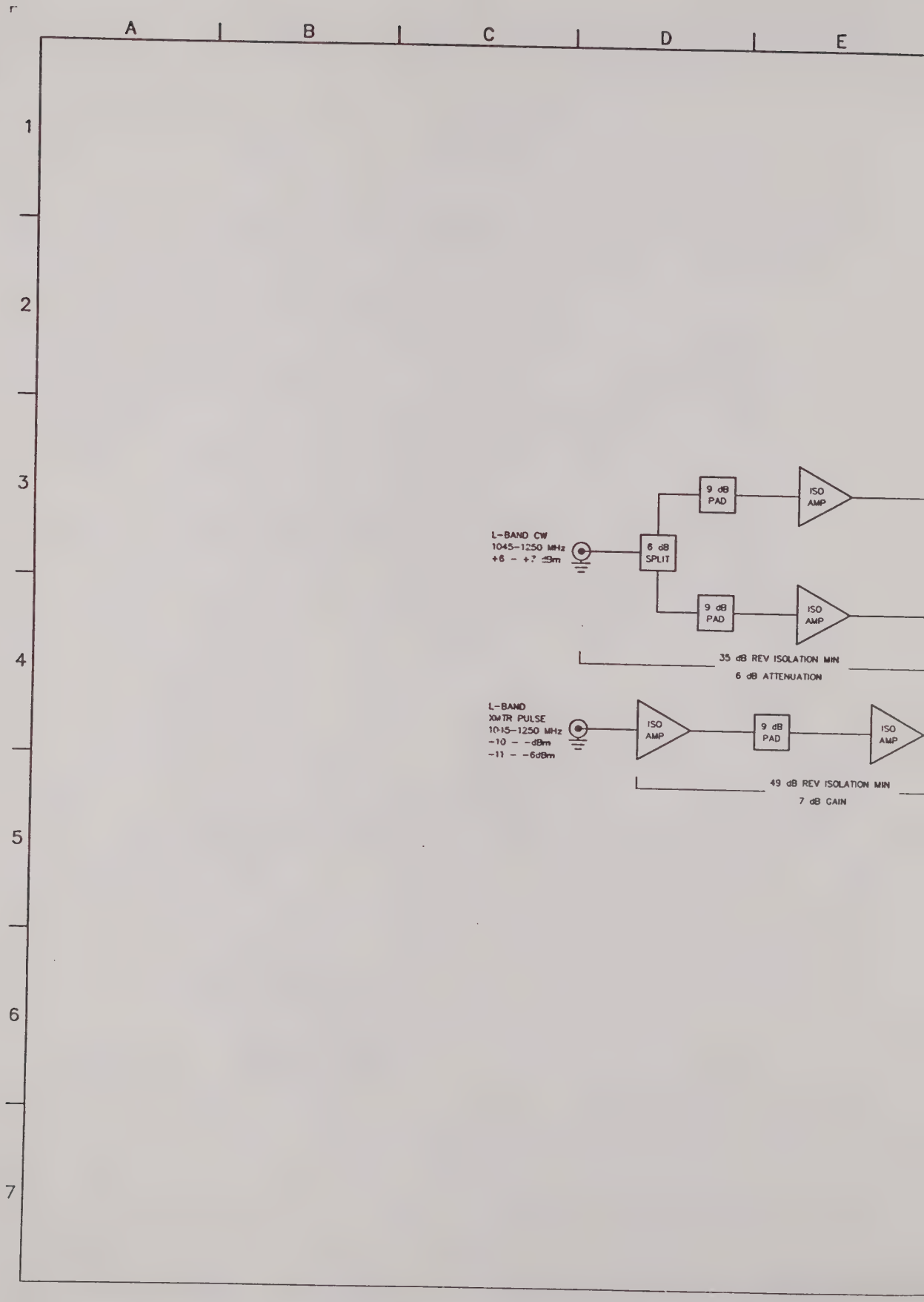
A
B
C
D
E
1
2
3
4
5
6
7
L-BAND CW
1045-1250 MHz
+6 - +7 dBm
6 dB SPLIT
9 dB PAD
ISO AMP
9 dB PAD
ISO AMP
35 dB REV ISOLATION MIN
6 dB ATTENUATION
L-BAND
XMTR PULSE
1045-1250 MHz
-10 - -8dBm
-11 - -6dBm
ISO AMP
9 dB PAD
ISO AMP
49 dB REV ISOLATION MIN
7 dB GAIN

F G H J K L

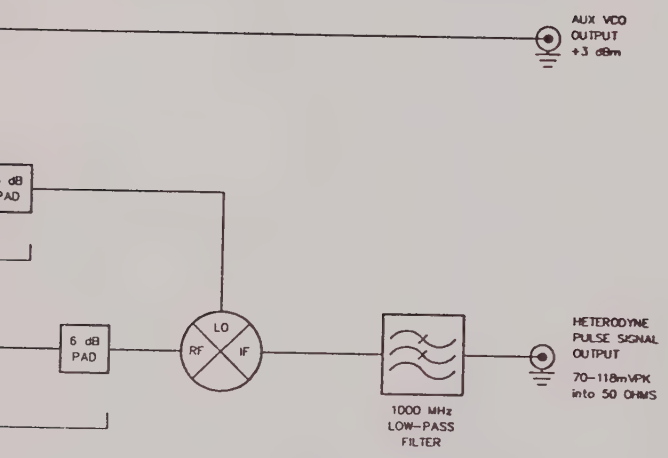
AUX VCO
OUTPUT
+3 dBm
dB
PAD
6 dB
PAD
LO
RF
IF
1000 MHz
LOW-PASS
FILTER
HETERODYNE
PULSE SIGNAL
OUTPUT
70-118mVPK
into 50 OHMS

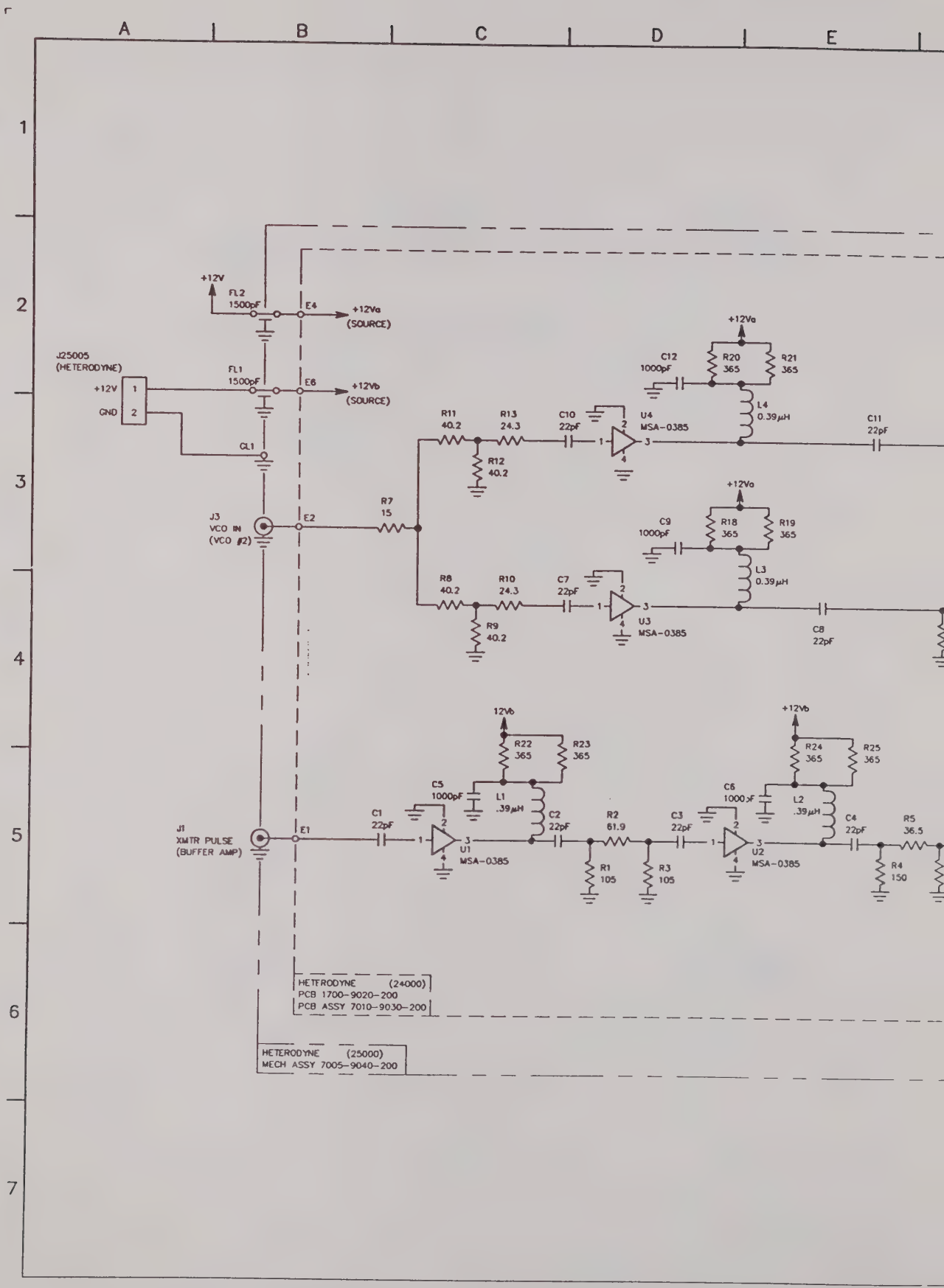
A
B
C
D
E
1
2
3
4
5
6
7
+12V
FL2
1500pF
E4
+12Va
(SOURCE)
J25005
(HETERODYNE)
+12V
GND
1
2
FL1
1500pF
E6
+12Vb
(SOURCE)
GL1
J3
VCO IN
(VCO #2)
E2
R7
15
R11
40.2
R13
24.3
C10
22pF
U4
MSA-0385
R12
40.2
+12Va
C12
1000pF
R20
365
R21
365
L4
0.39µH
C11
22pF
R8
40.2
R10
24.3
C7
22pF
U3
MSA-0385
R9
40.2
+12Va
C9
1000pF
R18
365
R19
365
L3
0.39µH
C8
22pF
J1
XMTR PULSE
(BUFFER AMP)
E1
C1
22pF
U1
MSA-0385
12Vb
R22
365
R23
365
C5
1000pF
L1
.39µH
C2
22pF
R2
61.9
R1
105
R3
105
C3
22pF
U2
MSA-0385
+12Vb
R24
365
R25
365
C6
1000pF
L2
.39µH
C4
22pF
R5
36.5
R4
150
HETERODYNE (24000)
PCB 1700-9020-200
PCB ASSY 7010-9030-200
HETERODYNE (25000)
MECH ASSY 7005-9040-200

F G H J K L

DATE	REV	CHANGE	APPROVED
12-24-91	B	DESIGN RELEASE J.I.M.	SL
5-6-92	B1	INC REF #L128 J.I.M.	SL
9-2-92	B2	INC REF #L143 J.I.M.	SL

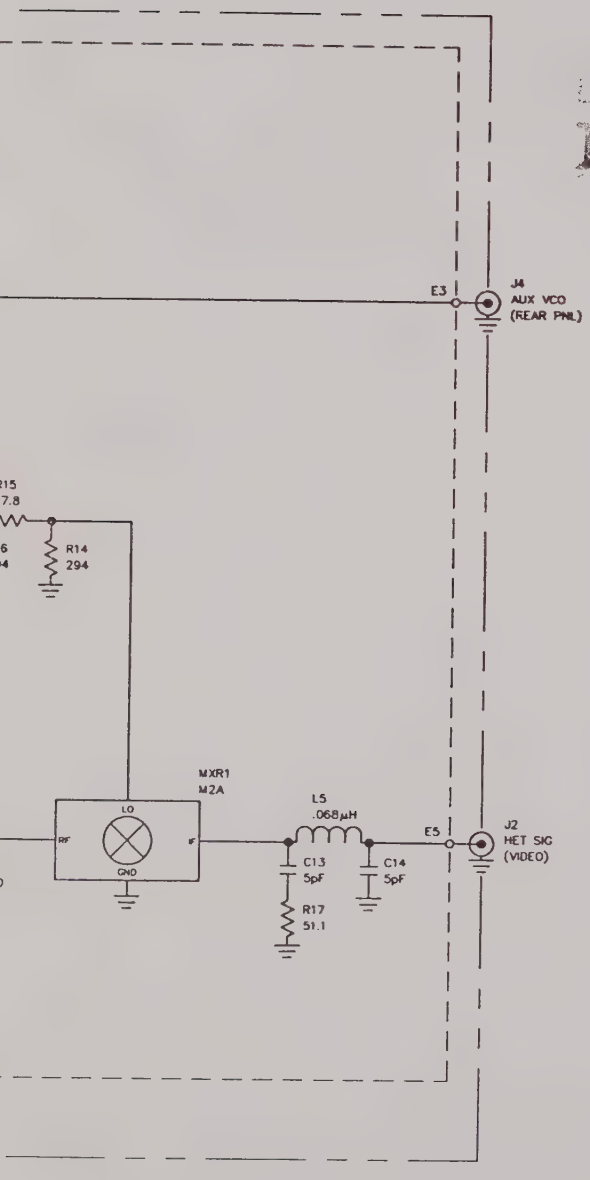

NOTES:
(UNLESS OTHERWISE SPECIFIED)

1. ALL REFERENCE NUMBERS CARRY AN ASSIGNED DESIGNATOR SERIES.
   THIS SCHEMATIC CARRIES SERIES: 24000
   7005-9040-200 SERIES: 25000
   7010-9030-200 SERIES: 24000
2. ALL RESISTORS ARE 1%, 1/8W.
3. ALL RESISTANCE IS EXPRESSED IN OHMS.
   ALL CAPACITANCE IS EXPRESSED IN MICROFARADS.
   ALL INDUCTANCE IS EXPRESSED IN MICROHENRIES.
4. HIGHEST REFERENCE DESIGNATIONS.
   7005-9040-200 FL2 GL1 J5
   7010-9030-200 C14 E6 R25 L5 U4 MXR1
5. REFERENCE DESIGNATIONS NOT USED. NONE
6. IC FUNCTIONS NOT USED: NONE

CAUTION:
CONTAINS PARTS AND ASSEMBLIES SUSCEPTIBLE TO DAMAGE BY ELECTROSTATIC DISCHARGE (ESD).

IFR SYSTEMS INC
10200 West York St., Wichita, Kansas 67215

DRAWN D HARDER 7-29-91	TITLE	CIRCUIT SCHEMATIC HETERODYNE
CHECKED J.SCHMIDT 12-23-91		
APPROVED P. HARRIS 12-24-91	SIZE D	DWG NO 0000-9040-200 REV B2
	SCALE	DO NOT SCALE FSCM 51190 SHEET 1 OF 2

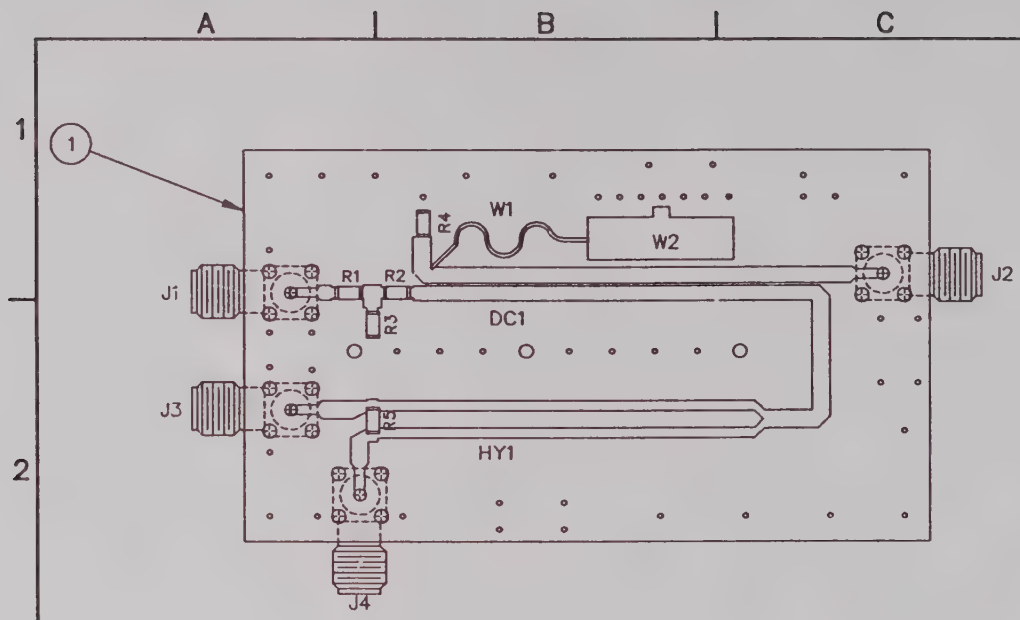

TOP SIDE

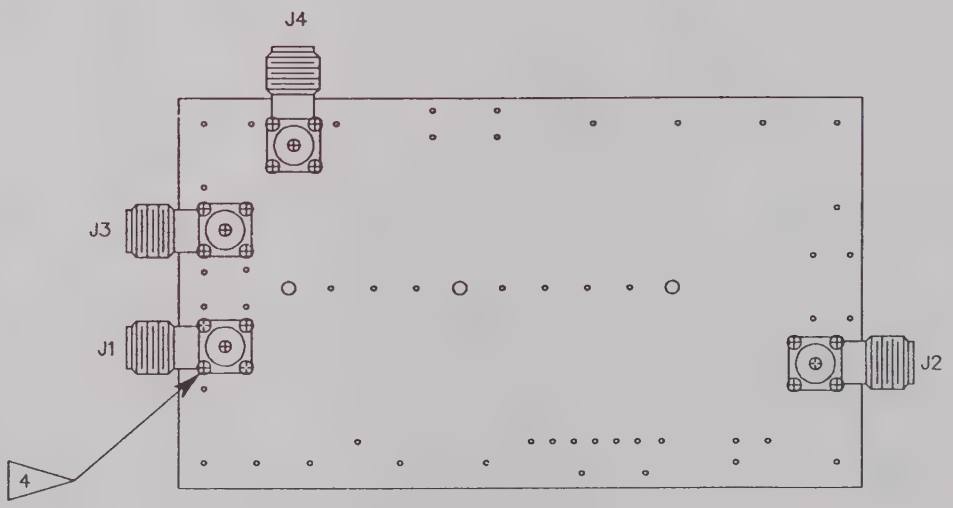

BOTTOM SIDE

D | E | F | G

DATE	REV	CHANGE	APVD
1-11-92	B	DESIGN RELEASE	SL
7/22/92	B1	INC REF # L139 RH	SL

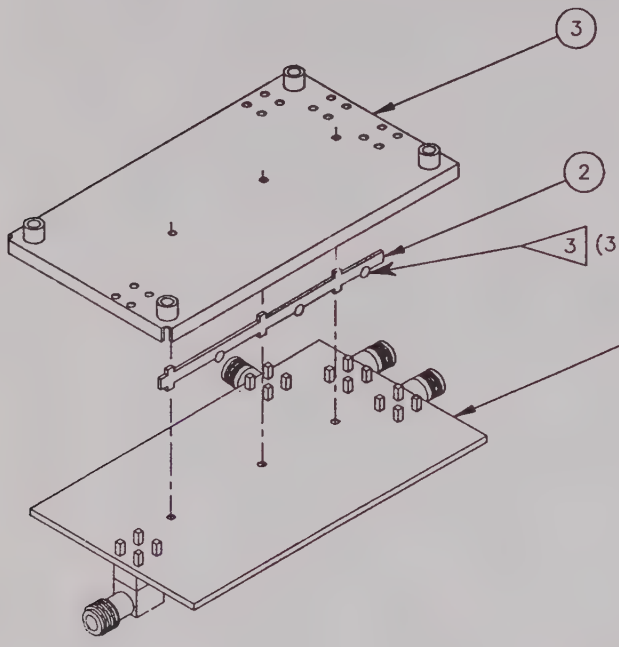

DETAIL "A"

NOTES:

1. ALL REFERENCE DESIGNATORS CARRY AN ASSIGNED DESIGNATOR SERIES. THIS DWG CARRIES SERIES 18000. (i.e. R1 IS 18001)
2. REFERENCE SCHEMATIC IS 0000-9040-300.

3 DIVIDER SHOULD BE TACKED 3 PLACES, BETWEEN EACH TAB ON PC BOARD.

4 SOLDER SHOULD FLOW THROUGH TO THE TOP SIDE OF CONNECTORS.

TOLERANCES: (UNLESS OTHERWISE SPECIFIED)	MATERIAL
ALL DIMENSIONS APPLY AFTER FINISH SURFACE FINISH: REMOVE ALL BURRS DECIMALS: .XXX= ± .XXXX= ± ANGLES: ±1/2DEG.	N/A
	FINISH: N/A

IFR SYSTEMS INC
10200 West York St., Wichita, Kansas 67215

DRAWN	DATE	TITLE
WAW	10/7/91	MECH ASS'Y COUPLER / SPLITTER
CHECKED	DATE	
J. SCHMIDT	12-20-91	
APPROVED	DATE	
P. HARRIS	12-21-91	

SIZE	DWG. NO.	REV
C	7005-9040-300	B1

SCALE:	DO NOT SCALE	CAGE	SHEET
2=1		51190	1 OF 1

BILL OF MATERIAL LISTED BY REFERENCE DESIGNATOR
AS OF ALL DATES

ASSEMBLY PART NO.: 7005-9040-300
DESCRIPTION: MECH ASSY, COUPLER/SPLITTER
ITEM MASTER REV: B1 ECO NO: #L139
REV OF THIS BOM: DATE OF LAST ECO: 07/22/92

STATUS	REFERENCE DESIGNATOR	QUANTITY PER ASSY	PART NUMBER	DESCRIPTION	EFFE
ACTIVE	*01	1.00	1700-9020-300	PC BD, COUPLER/SPLITTER	00/0
ACTIVE	*02	1.00	2506-9051-000	DIVIDER,COUPLER/SPLITTER	00/0
ACTIVE	*03	1.00	2508-9050-400	SHIELD, COUPLER/SPLITTER	00/0
ACTIVE	*SCHEM	.00	DWG-0000-9040-300	SCHEM,COUPLER/SPLIT MECH ASSY	00/0
ACTIVE	DC18001	4.00	0004-0000-000	*** PRINTED ELEMENT ***	00/0
ACTIVE	HY18001	-.--	0004-0000-000	*** PRINTED ELEMENT ***	00/0
ACTIVE	J18001	4.00	2123-0000-054	CONN,RF SUB,SMA,PCB RTANG JACK	00/0
ACTIVE	J18002	-.--	2123-0000-054	CONN,RF SUB,SMA,PCB RTANG JACK	00/0
ACTIVE	J18003	-.--	2123-0000-054	CONN,RF SUB,SMA,PCB RTANG JACK	00/0
ACTIVE	J18004	-.--	2123-0000-054	CONN,RF SUB,SMA,PCB RTANG JACK	00/0
ACTIVE	R18001	2.00	4722-8458-001	RES, 1% 1/8W 8.45 OHM *	00/0
ACTIVE	R18002	-.--	4722-8458-001	RES, 1% 1/8W 8.45 OHM *	00/0
ACTIVE	R18003	1.00	4722-1400-001	RES, 1% 1/8W 140 OHM *	00/0
ACTIVE	R18004	1.00	4722-4999-001	RES, 1% 1/8W 49.9 OHM *	00/0
ACTIVE	R18005	1.00	4722-1000-001	RES, 1% 1/8W 100 OHM *	00/0
ACTIVE	W18001	-.--	0004-0000-000	*** PRINTED ELEMENT ***	00/0
ACTIVE	W18002	-.--	0004-0000-000	*** PRINTED ELEMENT ***	00/0

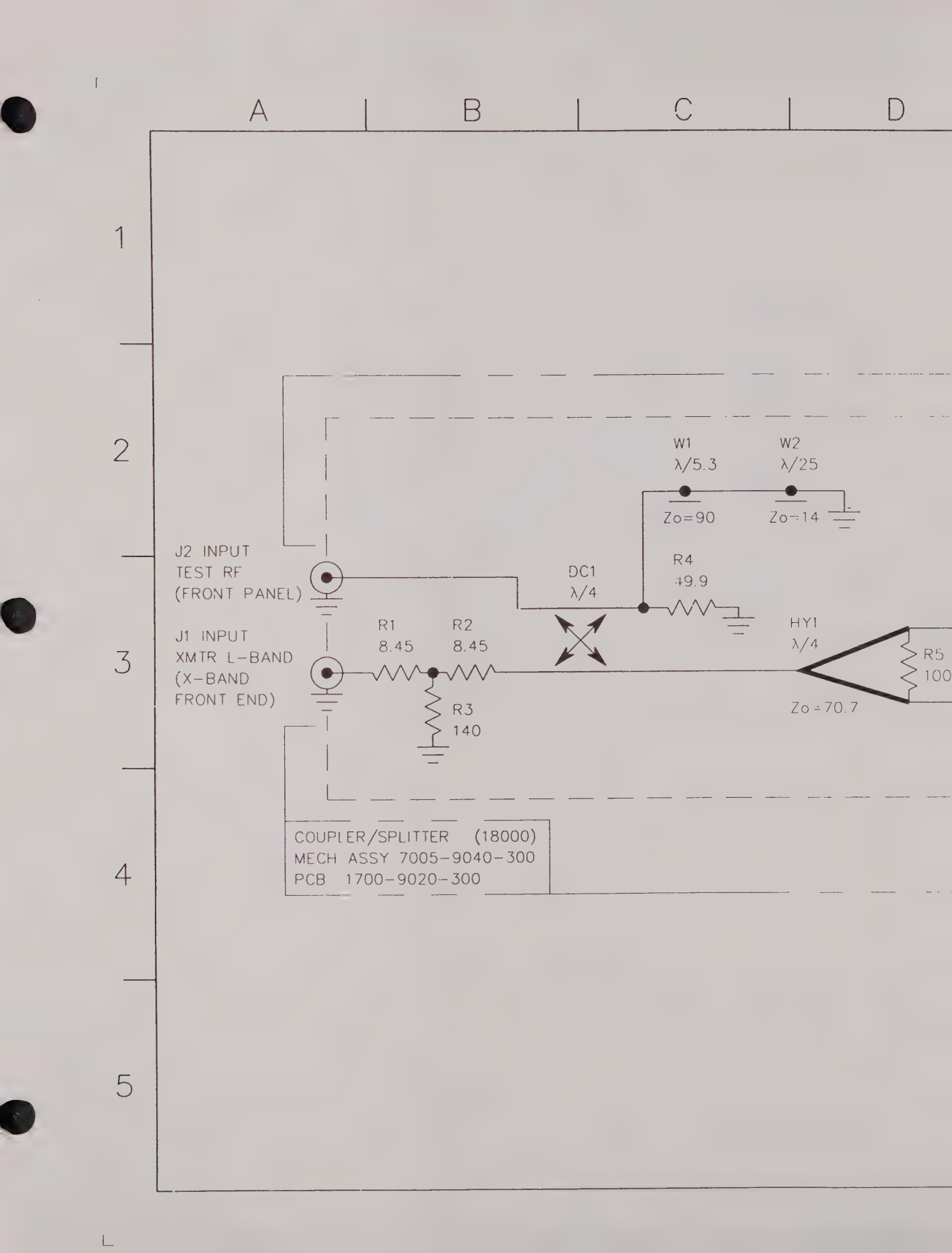
A
B
C
D
1
2
3
4
5
W1
λ/5.3
W2
λ/25
Zo=90
Zo=14
J2 INPUT
TEST RF
(FRONT PANEL)
DC1
λ/4
R4
49.9
J1 INPUT
XMTR L-BAND
(X-BAND
FRONT END)
R1
8.45
R2
8.45
HY1
λ/4
R5
100
R3
140
Zo=70.7
COUPLER/SPLITTER (18000)
MECH ASSY 7005-9040-300
PCB 1700-9020-300

E	F	G	H

DATE	REV	CHANGE	ILLUS.
4-16-91	A	FIRST GENERATION	RGC
DATE	REV	CHANGE	APPROVED
12-6-91	B	DESIGN RELEASE J.I.M.	SL

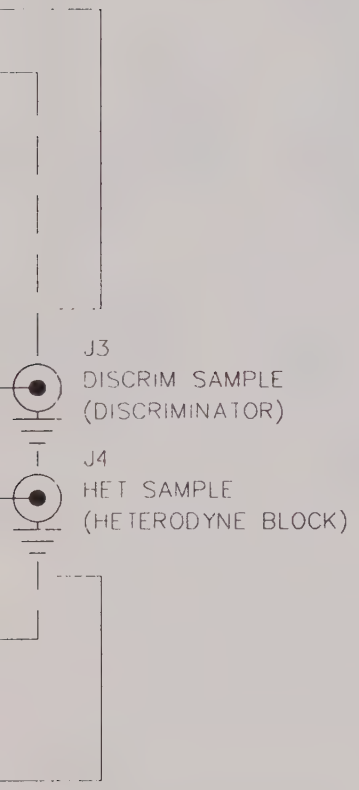

NOTES:
(UNLESS OTHERWISE SPECIFIED)

1. ALL REFERENCE NUMBERS CARRY AN ASSIGNED DESIGNATOR SERIES.
   THIS SCHEMATIC CARRIES SERIES: (18000)
2. ALL RESISTORS ARE 1%, 1/8 W.
3. ALL RESISTANCE IS EXPRESSED IN OHMS.
   ALL CAPACITANCE IS EXPRESSED IN MICRO FARADS.
   ALL INDUCTANCE IS EXPRESSED IN MICRO HENRIES.
4. HIGHEST REFERENCE DESIGNATIONS.
   DC1, R5, HY1, W2

5. CENTER FREQUENCY FOR WAVELENGTH IS 1143 MHz.

DEC 16 1991

	IFR SYSTEMS INC 10200 West York St., Wichita, Kansas 67215	
DRAWN R.CHAPMAN DATE 4-16-91	TITLE CIRCUIT SCHEMATIC COUPLER/SPLITTER	
CHECKED A.KRAUSKA DATE 12-2-91		
APPROVED P.R.HARRIS DATE 12-2-91	SIZE B / DWG. NO. 0000-9040-300	REV B
	SCALE: / DO NOT SCALE / FSCM 51190	SHEET 1 OF 1

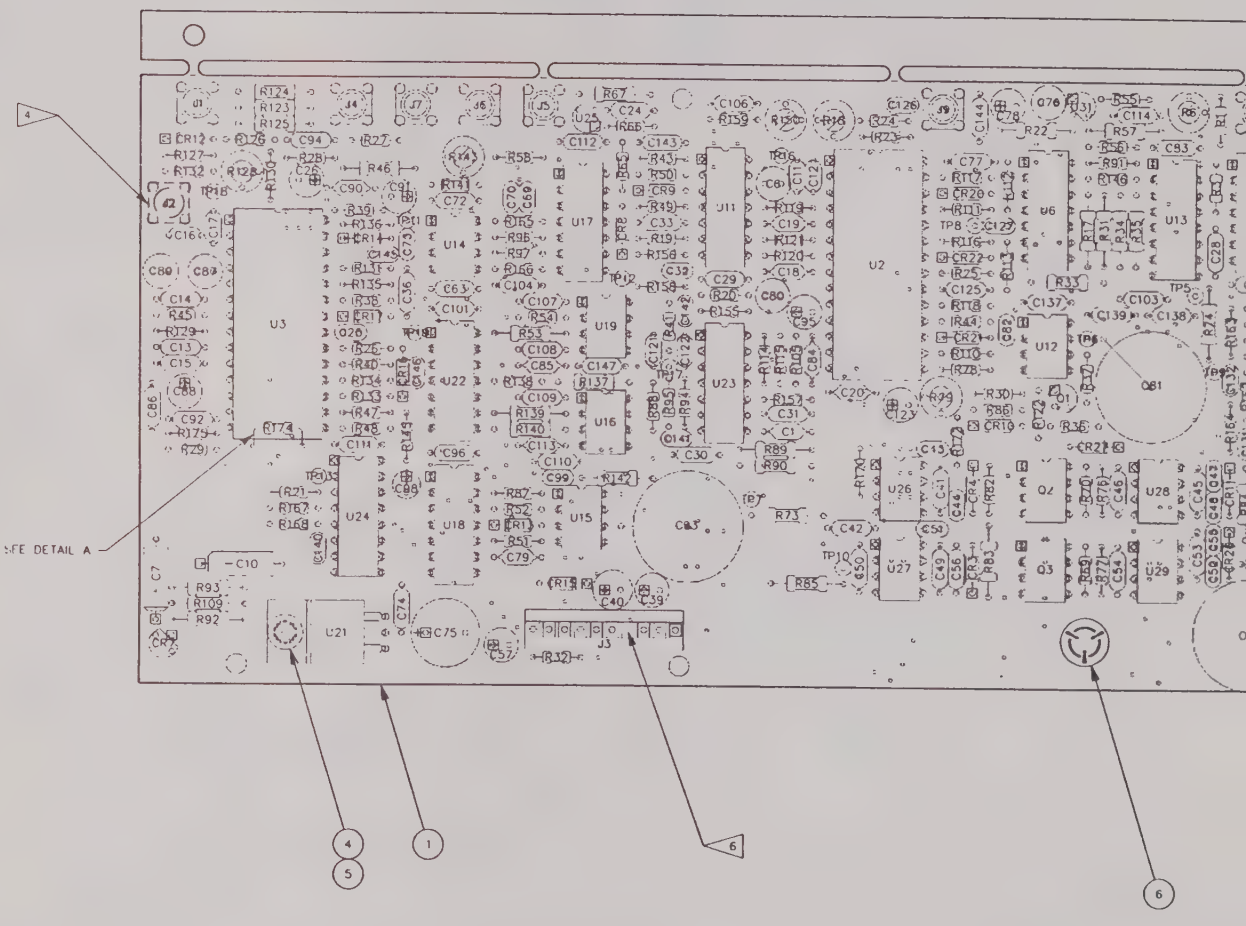
A
B
C
D
E
1
2
3
4
5
6
7
SEE DETAIL A
DETAIL

F | G | H | J | K | L

DATE	REV	CHANGE	APVD
1-29-92	B	DESIGN RELEASE	SL
3-07-92	B1	INC REF #L115 MKM	SL
3-18-92	B2	INC REF #L120	SL
5-13-92	B3	INC REF #L133 MKM	SL
6-9-92	B4	INC REF #L136	SL
7-28-92	B5	INC REF #L140	SL
8-17-92	B6	INC REF #L142	SL
9-11-92	C	INC REF #L144 CJW	SL

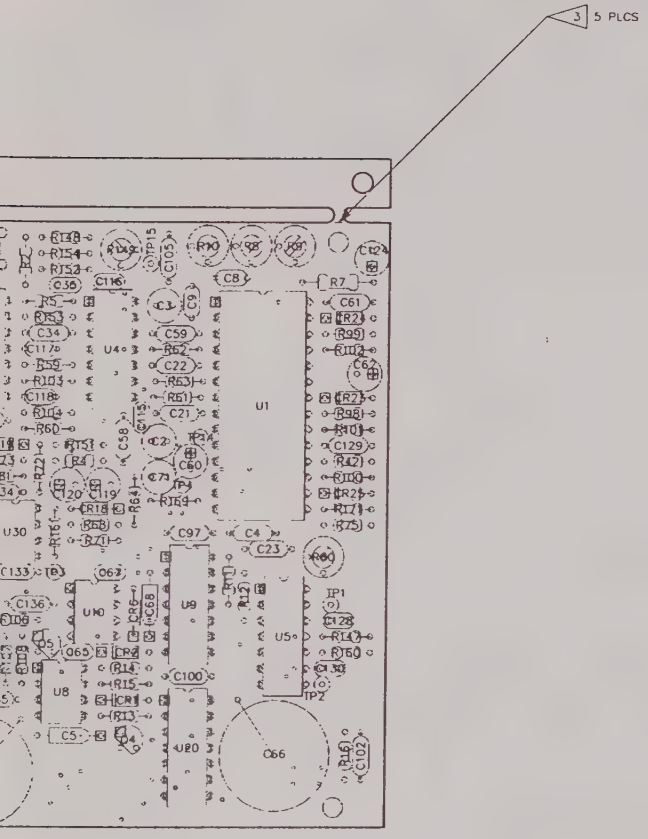

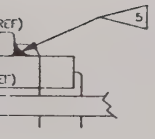

NOTES:

1. ALL REFERENCE DESIGNATORS CARRY AN ASSIGNED DESIGNATOR SERIES. THIS DWG CARRIES SERIES 17000. (i.e., R1 IS R17001).
2. REF SCHEMATIC # 0000-9030-500.
3. CUT BREAKAWAY TAB FROM PC BOARD.
4. TO BE INSTALLED ON BOTTOM SIDE OMLY.
5. TAK PAK R174 TO TOP OF U3, THEN APPLY RTV.
6. REMOVE PIN 4 FROM J3, FOR KEYING.

CAUTION:
CONTAINS PARTS AND ASSEMBLIES SUSCEPTIBLE TO DAMAGE BY ELECTROSTATIC DISCHARGE (ESD).

	IFR SYSTEMS INC
DRAWN DATE: R. AST 4-29-1991	TITLE: PC BOARD ASSY RD-301A VIDEO BOARD
CHECKED DATE: S.McELROY 1-28-92	
APPROVED DATE: P.R.HARRIS 1-28-92	SIZE: D DWG. NO.: 7010-9030-500 REV: C
	SCALE: 1:1 DO NOT SCALE FSCM: 51190 SHEET 1 OF 1

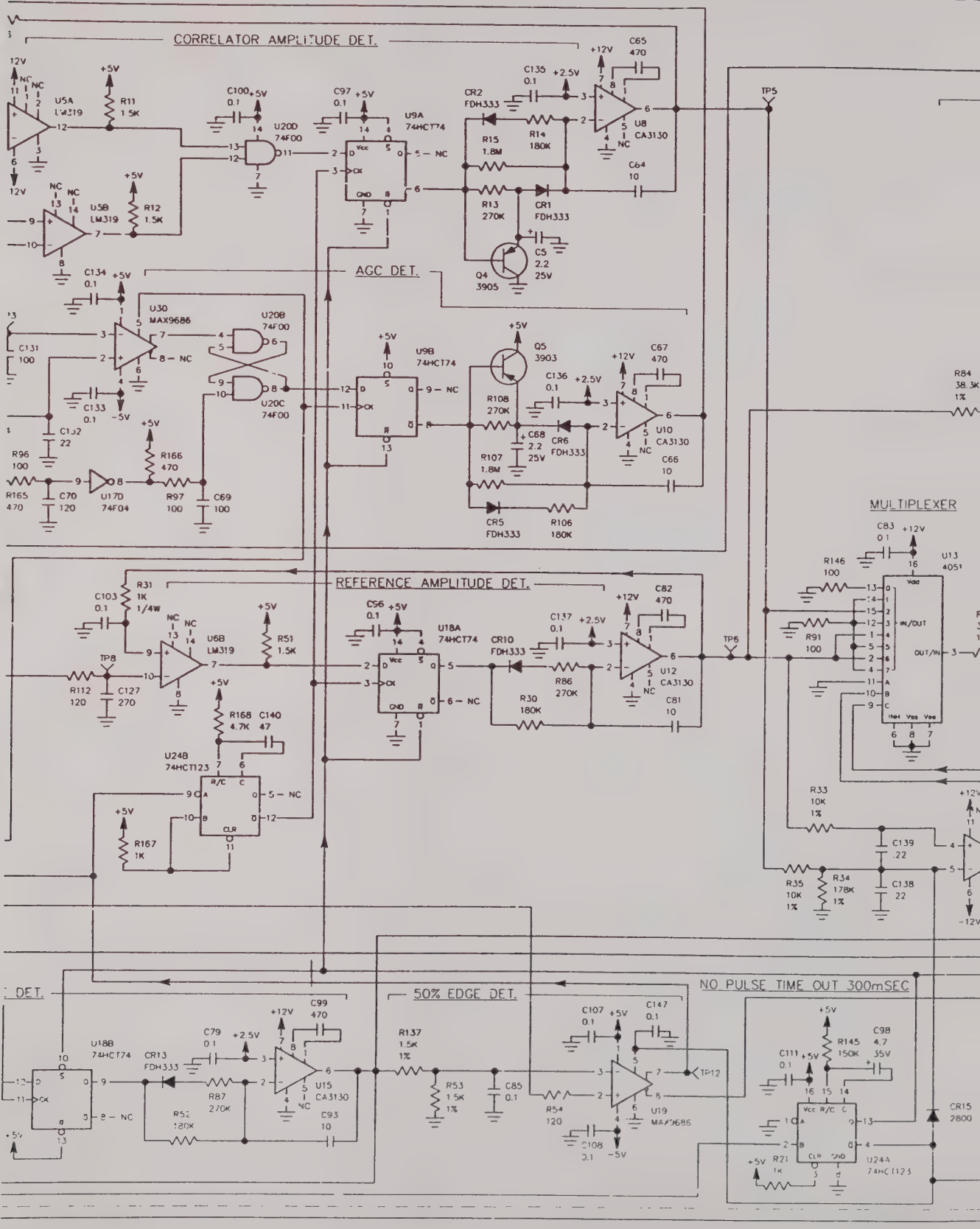
CORRELATOR AMPLITUDE DET.
AGC DET.
REFERENCE AMPLITUDE DET.
MULTIPLEXER
50% EDGE DET.
NO PULSE TIME OUT 300mSEC
U5A LM319
U5B LM319
U20D 74F00
U9A 74HCT74
U8 CA3130
U30 MAX9686
U20B 74F00
U20C 74F00
U9B 74HCT74
U10 CA3130
U17D 74F04
U6B LM319
U18A 74HCT74
U12 CA3130
U13 4051
U24B 74HCT123
U18B 74HCT74
U15 CA3130
U19 MAX9686
U24A 74HCT123
TP5
TP6
TP8
TP12
Q4 3905
Q5 3903
CR1 FDH333
CR2 FDH333
CR5 FDH333
CR6 FDH333
CR10 FDH333
CR13 FDH333
CR15 2800
R11 1.5K
R12 1.5K
R13 270K
R14 180K
R15 1.8M
R30 180K
R31 1K 1/4W
R33 10K 1%
R34 178K 1%
R35 10K 1%
R51 1.5K
R52 180K
R53 1.5K 1%
R54 120
R84 38.3K 1%
R86 270K
R87 270K
R91 100
R96 100
R97 100
R106 180K
R107 1.8M
R108 270K
R112 120
R137 1.5K 1%
R145 150K
R146 100
R165 470
R166 470
R167 1K
R168 4.7K
C5 2.2 25V
C64 10
C65 470
C66 10
C67 470
C68 2.2 25V
C69 100
C70 120
C79 0.1
C81 10
C82 470
C83 0.1
C85 0.1
C93 10
C97 0.1
C98 4.7 35V
C99 470
C100 0.1
C103 0.1
C107 0.1
C108 0.1
C111 0.1
C127 270
C131 100
C132 22
C133 0.1
C134 0.1
C135 0.1
C136 0.1
C137 0.1
C138 22
C139 .22
C140 47
C147 0.1
+12V
+5V
-5V
+2.5V
NC

S T U V W X

DATE	REV	CHANGE	APPROVED
5-13-92	B	DESIGN RELEASE	J.I.M. SL
6-9-92	B1	INC REF #L136	J.I.M. SL
8-18-92	B2	INC RFE #L140	J.I.M. SL
10-14-92	C	INC REF #L144	J.I.M. SL

J17009
MET MONITOR
(FNT PNL)

MULTIPLIER/DIVIDER

R83
38.3K
1%

CR3
IN4148

C56
0.1

C49
0.1

+12V

C51
100

U27
308

R85
2.94K
1%

TP10

J17003
(MAIN HARN)
1 METER

C50
0.1

-12V

CR26
IN4148

C52
330

C53
0.1

C55
100

U29
308

R69
3.3K

Q2
LM394

R77
100

C54
0.1

CR11
IN4148

C48
330

C45
0.1

C47
100

U28
308

R70
3.3K

Q3
LM394

R76
100

C46
0.1

CR4
IN4148

C44
330

C41
0.1

C43
100

U26
308

R73
38.3K
1%

R82
3.3K

R170
100

C42
0.1

TP7

R17
2.2K
1/4W

U6A
LM319

R37
10K

R122
1K

Q1
2222

R36
470

CR27
2800

J17003
(WIRE HARN)
8 PK/EFF
7 EFF ANN
9 NO PULSE

J17004
DET
(FRONT PANEL)

C112
0.1

+5V

U17A
74F04

J17005
50% DETECTED
VIDEO
(DISC 1#)

J17006
50% DETECTED
VIDEO
(RANGE BD#2)

U17B
74F04

J17007
50% DETECTED
VIDEO
(REAR PANEL)

U17C
74F04

NOTES:
(UNLESS OTHERWISE SPECIFIED)

1. ALL REFERENCE NUMBERS CARRY AN ASSIGNED DESIGNATOR SERIES.
   THIS SCHEMATIC CARRIES SERIES: 17000
2. ALL RESISTORS ARE 5%, 1/8W.
3. ALL RESISTANCE IS EXPRESSED IN OHMS.
   ALL CAPACITANCE IS EXPRESSED IN MICROFARADS.
   ALL INDUCTANCE IS EXPRESSED IN MICROHENRIES
4. HIGHEST REFERENCE DESIGNATIONS.
   C147 R175 CR27 Q5 U31 J17009 TP19
5. REFERENCE DESIGNATIONS NOT USED.
   C37 C38 R144
6. IC FUNCTIONS NOT USED:
   U20A 74F00
   U22A 74F00

* - INDICATES PRINTED TRANSMISSION LINES OF OTHER THAN 50 OHMS IMPEDANCE WHICH CONSTITUTE CIRCUIT ELEMENTS. 50 OHM TRANSMISSION LINES ARE NOT SHOWN.

CAUTION:
CONTAINS PARTS AND ASSEMBLIES SUSCEPTIBLE TO DAMAGE BY ELECTROSTATIC DISCHARGE (ESD).

IFR SYSTEMS, INC
1,200 West York St., Wichita, Kansas 67215

DRAWN J. MILLER 4-29-92	TITLE	CIRCUIT SCHEMATIC VIDEO BOARD
CHECKED S. MCELROY 5-13-92		
APPROVED P. HARRIS 5-13-92	SIZE G	DWG. NO. 0000-9030-500 REV C
SCALE	DO NOT SCALE	SHEET 1 OF 3

1 2 3 4 5 6 7

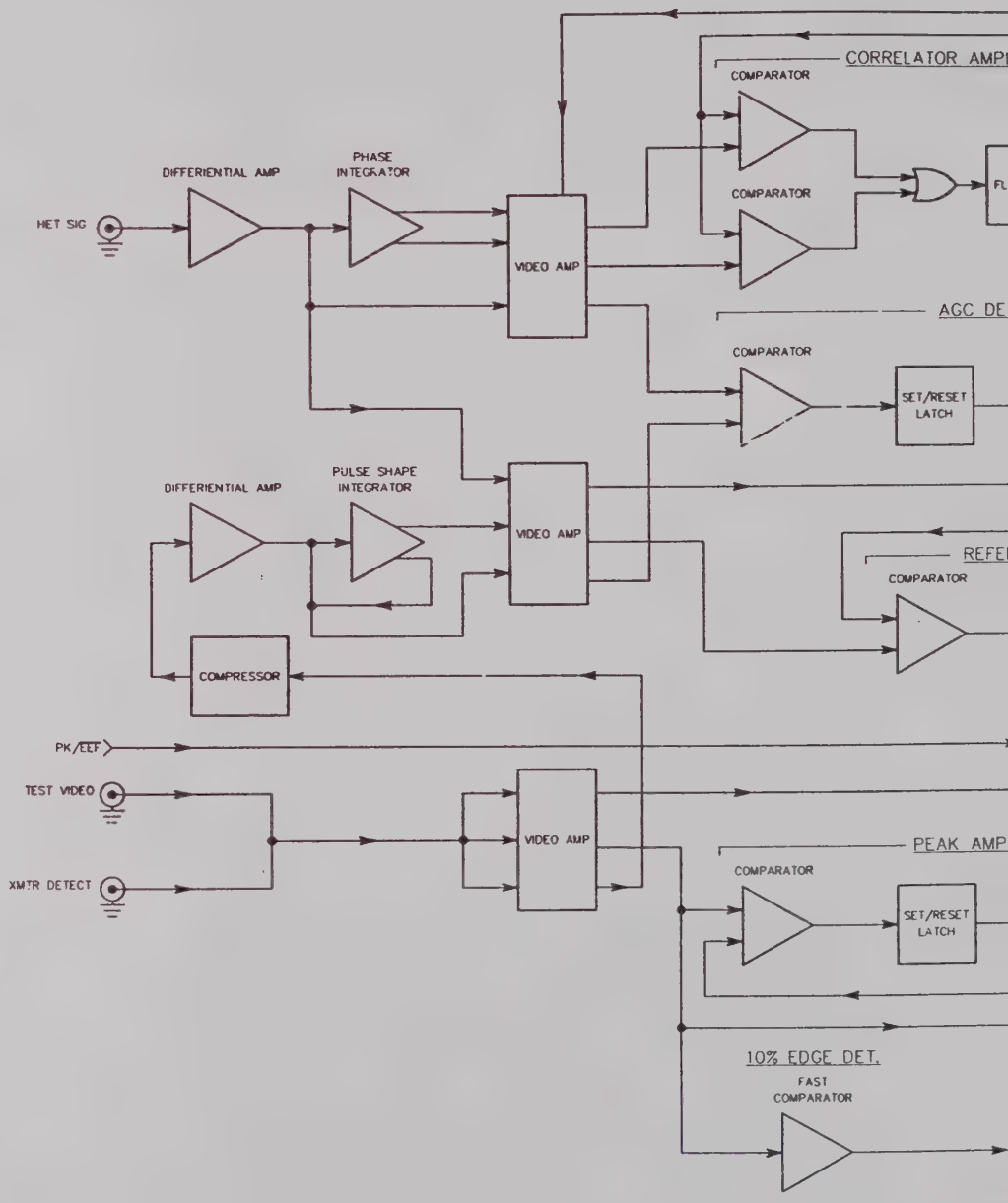
A
B
C
D
E
1
2
3
4
5
6
7
CORRELATOR AMP
COMPARATOR
COMPARATOR
DIFFERIENTIAL AMP
PHASE INTEGRATOR
HET SIG
VIDEO AMP
AGC DE
COMPARATOR
SET/RESET LATCH
DIFFERIENTIAL AMP
PULSE SHAPE INTEGRATOR
VIDEO AMP
REFE
COMPARATOR
COMPRESSOR
PK/EEF
TEST VIDEO
XMTR DETECT
VIDEO AMP
PEAK AMP
COMPARATOR
SET/RESET LATCH
10% EDGE DET.
FAST COMPARATOR

F G H J K L

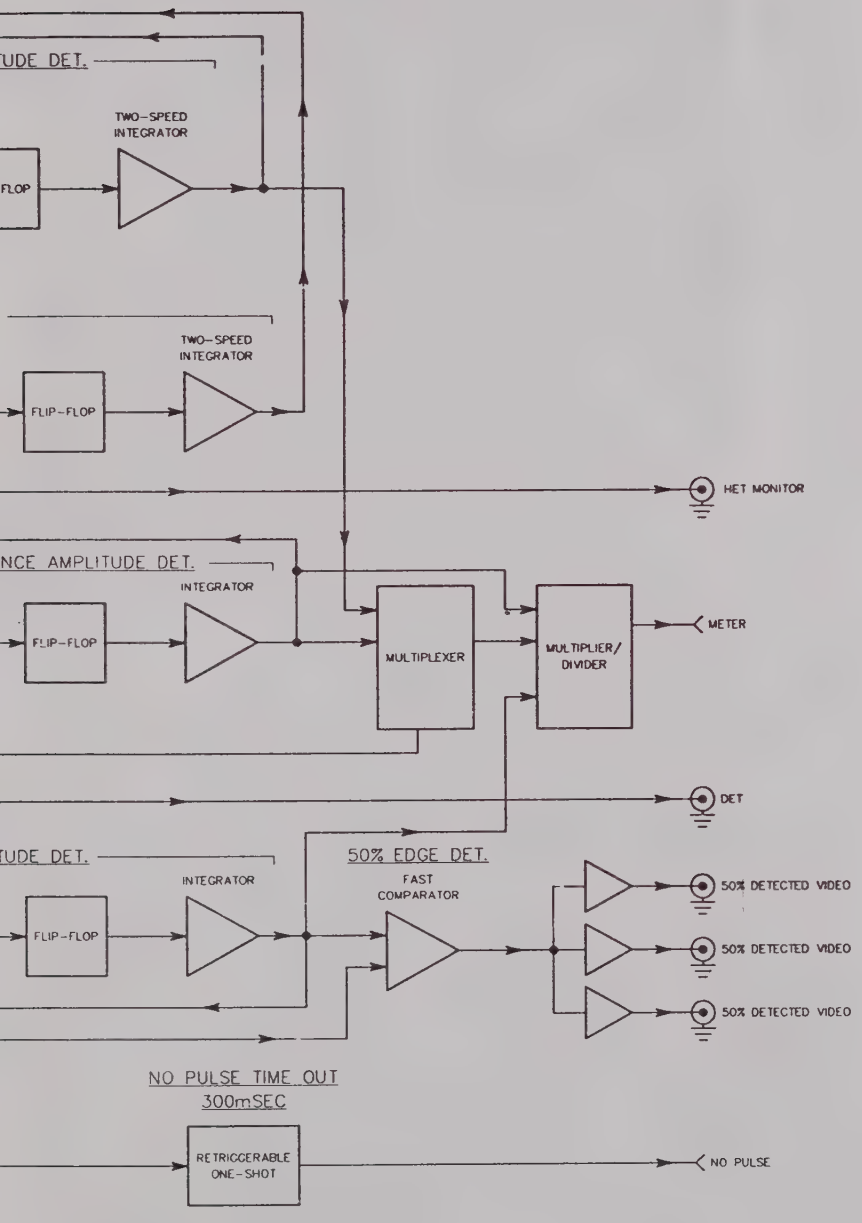
TUDE DET.
TWO-SPEED INTEGRATOR
FLOP
TWO-SPEED INTEGRATOR
FLIP-FLOP
MET MONITOR
NCE AMPLITUDE DET.
INTEGRATOR
FLIP-FLOP
MULTIPLEXER
MULTIPLIER/ DIVIDER
METER
DET
TUDE DET.
INTEGRATOR
FLIP-FLOP
50% EDGE DET.
FAST COMPARATOR
50% DETECTED VIDEO
50% DETECTED VIDEO
50% DETECTED VIDEO
NO PULSE TIME OUT 300mSEC
RETRIGGERABLE ONE-SHOT
NO PULSE

BILL OF MATERIAL LISTED BY REFERENCE DESIGNATOR
AS OF ALL DATES

REQUEST

ASSEMBLY PART NO.: 7010-9030-500
DESCRIPTION: PCB ASSY,VIDEO
ITEM MASTER REV: C ECO NO: #L144
REV OF THIS BOM: DATE OF LAST ECO: 11/23/92

STATUS	REFERENCE DESIGNATOR	QUANTITY PER ASSY	PART NUMBER	DESCRIPTION		EFFEC
ACTIVE	*01	1.00	1700-9020-500	PC BD, VIDEO		00/00
ACTIVE	*04	1.00	2850-0000-020	NUT,HEX,SMALL PAT,4-40		00/00
ACTIVE	*05	1.00	2803-0250-006	SCREW,4-40 X 1/4 PPHM		00/00
ACTIVE	*SCHEM	.00	DWG-0000-9030-500	SCHEM, VIDEO		00/00
ACTIVE	C17001	57.00	1521-0000-008	CAP,UF .10 50V,DIP Z5U	*	00/00
ACTIVE	C17002	8.00	1585-1000-016	CAP,NON-POLAR uF,10 16V RDL	*	00/00
ACTIVE	C17003	-.--	1585-1000-016	CAP,NON-POLAR uF,10 16V RDL	*	00/00
ACTIVE	C17004	-.--	1521-0000-008	CAP,UF .10 50V,DIP Z5U	*	00/00
ACTIVE	C17005	2.00	1507-0225-019	CAP, UF 2.2, 25V, TANT 20	*	00/00
ACTIVE	C17006	-.--	1585-1000-016	CAP,NON-POLAR uF,10 16V RDL	*	00/00
ACTIVE	C17007	2.00	1507-0336-023	CAP,UF 33, 10V,TANT, 20		00/00
ACTIVE	C17008	10.00	1625-2230-100	CAP,UF .022, 100V X7R,5%	*	00/00
ACTIVE	C17009	-.--	1625-2230-100	CAP,UF .022, 100V X7R,5%	*	00/00
ACTIVE	C17010	-.--	1507-0336-023	CAP,UF 33, 10V,TANT, 20		00/00
ACTIVE	C17011	-.--	1625-2230-100	CAP,UF .022, 100V X7R,5%	*	00/00
ACTIVE	C17012	-.--	1625-2230-100	CAP,UF .022, 100V X7R,5%	*	00/00
ACTIVE	C17013	16.00	1627-2240-450	CAP,uF .22, 50V	*	00/00
ACTIVE	C17014	-.--	1627-2240-450	CAP,uF .22, 50V	*	00/00
ACTIVE	C17015	-.--	1627-2240-450	CAP,uF .22, 50V	*	00/00
ACTIVE	C17016	-.--	1625-2230-100	CAP,UF .022, 100V X7R,5%	*	00/00
ACTIVE	C17017	-.--	1625-2230-100	CAP,UF .022, 100V X7R,5%	*	00/00
ACTIVE	C17018	-.--	1627-2240-450	CAP,uF .22, 50V	*	00/00

BILL OF MATERIAL LISTED BY REFERENCE DESIGNATOR
AS OF ALL DATES

ASSEMBLY PART NO.: 7010-9030-500
DESCRIPTION: PCB ASSY,VIDEO
ITEM MASTER REV: C ECO NO: #L144
REV OF THIS BOM: DATE OF LAST ECO: 11/23/92

STATUS	REFERENCE DESIGNATOR	QUANTITY PER ASSY	PART NUMBER	DESCRIPTION	EFFEC
ACTIVE	C17019	-.--	1627-2240-450	CAP,uF .22, 50V *	00/0(
ACTIVE	C17020	-.--	1627-2240-450	CAP,uF .22, 50V *	00/0(
ACTIVE	C17021	-.--	1627-2240-450	CAP,uF .22, 50V *	00/0(
ACTIVE	C17022	-.--	1627-2240-450	CAP,uF .22, 50V *	00/0(
ACTIVE	C17023	-.--	1627-2240-450	CAP,uF .22, 50V *	00/0(
ACTIVE	C17024	-.--	1627-2240-450	CAP,uF .22, 50V *	00/0(
ACTIVE	C17025	1.00	1506-0180-017	CAP,PF 18, 100V,NPO, 5	00/0(
ACTIVE	C17026	11.00	1580-1000-200	CAP,UF, 10, 25V,ELE RDL	00/0(
ACTIVE	C17027	-.--	1521-0000-008	CAP,UF .10 50V,DIP Z5U *	00/0(
ACTIVE	C17028	-.--	1521-0000-008	CAP,UF .10 50V,DIP Z5U *	00/0(
ACTIVE	C17029	-.--	1521-0000-008	CAP,UF .10 50V,DIP Z5U *	00/0(
ACTIVE	C17030	-.--	1521-0000-008	CAP,UF .10 50V,DIP Z5U *	00/0(
ACTIVE	C17031	-.--	1521-0000-008	CAP,UF .10 50V,DIP Z5U *	00/0(
ACTIVE	C17032	2.00	1506-0222-017	CAP,pF 2200 50V NPO *	00/0(
ACTIVE	C17033	-.--	1521-0000-008	CAP,UF .10 50V,DIP Z5U *	00/0(
ACTIVE	C17034	-.--	1521-0000-008	CAP,UF .10 50V,DIP Z5U *	00/0(
ACTIVE	C17035	-.--	1506-0222-017	CAP,pF 2200 50V NPO *	00/0(
ACTIVE	C17036	-.--	1521-0000-008	CAP,UF .10 50V,DIP Z5U *	00/0(
ACTIVE	C17037	3.00	0002-0000-000	*** REF DESIG NOT USED ***	00/0(
ACTIVE	C17038	-.--	0002-0000-000	*** REF DESIG NOT USED ***	00/0(
ACTIVE	C17039	2.00	1580-2202-420	CAP, uF 22, 35V,ELE,RDL *	00/0(
ACTIVE	C17040	1.00	1580-4702-105	CAP, UF 47, 10V, ELE RDL *	00/0(

LI,283,2.MDATAB01 IFR SYSTEMS, INC.
MON, JAN 4, 1993, 12:46 PM

BILL OF MATERIAL LISTED BY REFERENCE DESIGNATOR
AS OF ALL DATES

ASSEMBLY PART NO.: 7010-9030-500
DESCRIPTION: PCB ASSY,VIDEO
ITEM MASTER REV: C ECO NO: #L144
REV OF THIS BOM: DATE OF LAST ECO: 11/23/92

STATUS	REFERENCE DESIGNATOR	QUANTITY PER ASSY	PART NUMBER	DESCRIPTION	EFFEC
ACTIVE	C17041	-.--	1521-0000-008	CAP,UF .10 50V,DIP Z5U *	00/0(
ACTIVE	C17042	-.--	1521-0000-008	CAP,UF .10 50V,DIP Z5U *	00/0(
ACTIVE	C17043	10.00	1506-0101-017	CAP,pF 100, 100V NPO 5 *	00/0(
ACTIVE	C17044	3.00	1506-0331-017	CAP,PF 330, 100V,NPO, 5	00/0(
ACTIVE	C17045	-.--	1521-0000-008	CAP,UF .10 50V,DIP Z5U *	00/0(
ACTIVE	C17046	-.--	1521-0000-008	CAP,UF .10 50V,DIP Z5U *	00/0(
ACTIVE	C17047	-.--	1506-0101-017	CAP,pF 100, 100V NPO 5 *	00/0(
ACTIVE	C17048	-.--	1506-0331-017	CAP,PF 330, 100V,NPO, 5	00/0(
ACTIVE	C17049	-.--	1521-0000-008	CAP,UF .10 50V,DIP Z5U *	00/0(
ACTIVE	C17050	-.--	1521-0000-008	CAP,UF .10 50V,DIP Z5U *	00/0(
ACTIVE	C17051	-.--	1506-0101-017	CAP,pF 100, 100V NPO 5 *	00/0(
ACTIVE	C17052	-.--	1506-0331-017	CAP,PF 330, 100V,NPO, 5	00/0(
ACTIVE	C17053	-.--	1521-0000-008	CAP,UF .10 50V,DIP Z5U *	00/0(
ACTIVE	C17054	-.--	1521-0000-008	CAP,UF .10 50V,DIP Z5U *	00/0(
ACTIVE	C17055	-.--	1506-0101-017	CAP,pF 100, 100V NPO 5 *	00/0(
ACTIVE	C17056	-.--	1521-0000-008	CAP,UF .10 50V,DIP Z5U *	00/0(
ACTIVE	C17057	-.--	1580-2202-420	CAP, uF 22, 35V,ELE,RDL *	00/0(
ACTIVE	C17058	-.--	1521-0000-008	CAP,UF .10 50V,DIP Z5U *	00/0(
ACTIVE	C17059	-.--	1521-0000-008	CAP,UF .10 50V,DIP Z5U *	00/0(
ACTIVE	C17060	-.--	1580-1000-200	CAP,UF, 10, 25V,ELE RDL	00/0(
ACTIVE	C17061	-.--	1627-2240-450	CAP,uF .22, 50V *	00/0(
ACTIVE	C17062	-.--	1580-1000-200	CAP,UF, 10, 25V,ELE RDL	00/0(

LI,283,2.MDATAB01 IFR SYSTEMS, INC.
MON, JAN 4, 1993, 12:46 PM

BILL OF MATERIAL LISTED BY REFERENCE DESIGNATOR
AS OF ALL DATES

ASSEMBLY PART NO.: 7010-9030-500
DESCRIPTION: PCB ASSY,VIDEO
ITEM MASTER REV: C ECO NO: #L144
REV OF THIS BOM: DATE OF LAST ECO: 11/23/92

STATUS	REFERENCE DESIGNATOR	QUANTITY PER ASSY	PART NUMBER	DESCRIPTION	EFFEC
ACTIVE	C17063	-.--	1521-0000-008	CAP,UF .10 50V,DIP Z5U *	00/00
ACTIVE	C17064	4.00	1502-0106-012	CAP,UF 10, 50V,MPC, 20	00/00
ACTIVE	C17065	4.00	1506-0471-017	CAP,pF 470, 100V,NPO 5 *	00/00
ACTIVE	C17066	-.--	1502-0106-012	CAP,UF 10, 50V,MPC, 20	00/00
ACTIVE	C17067	-.--	1506-0471-017	CAP,pF 470, 100V,NPO 5 *	00/00
ACTIVE	C17068	-.--	1507-0225-019	CAP, UF 2.2, 25V, TANT 20 *	00/00
ACTIVE	C17069	-.--	1506-0101-017	CAP,pF 100, 100V NPO 5 *	00/00
ACTIVE	C17070	1.00	1506-0121-017	CAP, pF 120, 100V, NPO 5 *	00/00
ACTIVE	C17071	-.--	1585-1000-016	CAP,NON-POLAR uF,10 16V RDL *	00/00
ACTIVE	C17072	-.--	1521-0000-008	CAP,UF .10 50V,DIP Z5U *	00/00
ACTIVE	C17073	1.00	1506-0010-017	CAP,PF 1.0, 100V,MICA, 50	00/00
ACTIVE	C17074	-.--	1521-0000-008	CAP,UF .10 50V,DIP Z5U *	00/00
ACTIVE	C17075	1.00	1508-0157-020	CAP, UF 150, 15V, TANT RDL *	00/00
ACTIVE	C17076	-.--	1585-1000-016	CAP,NON-POLAR uF,10 16V RDL *	00/00
ACTIVE	C17077	-.--	1627-2240-450	CAP,uF .22, 50V *	00/00
ACTIVE	C17078	-.--	1580-1000-200	CAP,UF, 10, 25V,ELE RDL	00/00
ACTIVE	C17079	-.--	1521-0000-008	CAP,UF .10 50V,DIP Z5U *	00/00
ACTIVE	C17080	-.--	1585-1000-016	CAP,NON-POLAR uF,10 16V RDL *	00/00
ACTIVE	C17081	-.--	1502-0106-012	CAP,UF 10, 50V,MPC, 20	00/00
ACTIVE	C17082	-.--	1506-0471-017	CAP,pF 470, 100V,NPO 5 *	00/00
ACTIVE	C17083	-.--	1521-0000-008	CAP,UF .10 50V,DIP Z5U *	00/00
ACTIVE	C17084	-.--	1521-0000-008	CAP,UF .10 50V,DIP Z5U *	00/00

BILL OF MATERIAL LISTED BY REFERENCE DESIGNATOR
AS OF ALL DATES

ASSEMBLY PART NO.: 7010-9030-500
DESCRIPTION: PCB ASSY,VIDEO
ITEM MASTER REV: C ECO NO: #L144
REV OF THIS BOM: DATE OF LAST ECO: 11/23/92

STATUS	REFERENCE DESIGNATOR	QUANTITY PER ASSY	PART NUMBER	DESCRIPTION	EFFEC
ACTIVE	C17085	-.--	1521-0000-008	CAP,UF .10 50V,DIP Z5U *	00/00
ACTIVE	C17086	-.--	1521-0000-008	CAP,UF .10 50V,DIP Z5U *	00/00
ACTIVE	C17087	-.--	1585-1000-016	CAP,NON-POLAR uF,10 16V RDL *	00/00
ACTIVE	C17088	-.--	1580-1000-200	CAP,UF, 10, 25V,ELE RDL	00/00
ACTIVE	C17089	-.--	1585-1000-016	CAP,NON-POLAR uF,10 16V RDL *	00/00
ACTIVE	C17090	-.--	1627-2240-450	CAP,uF .22, 50V *	00/00
ACTIVE	C17091	-.--	1580-1000-200	CAP,UF, 10, 25V,ELE RDL	00/00
ACTIVE	C17092	-.--	1521-0000-008	CAP,UF .10 50V,DIP Z5U *	00/00
ACTIVE	C17093	-.--	1502-0106-012	CAP,UF 10, 50V,MPC, 20	00/00
ACTIVE	C17094	-.--	1521-0000-008	CAP,UF .10 50V,DIP Z5U *	00/00
ACTIVE	C17095	-.--	1580-1000-200	CAP,UF, 10, 25V,ELE RDL	00/00
ACTIVE	C17096	-.--	1521-0000-008	CAP,UF .10 50V,DIP Z5U *	00/00
ACTIVE	C17097	-.--	1521-0000-008	CAP,UF .10 50V,DIP Z5U *	00/00
ACTIVE	C17098	1.00	1580-4792-305	CAPACITOR 4.7 uF,35V *	00/00
ACTIVE	C17099	-.--	1506-0471-017	CAP,pF 470, 100V,NPO 5 *	00/00
ACTIVE	C17100	-.--	1521-0000-008	CAP,UF .10 50V,DIP Z5U *	00/00
ACTIVE	C17101	-.--	1521-0000-008	CAP,UF .10 50V,DIP Z5U *	00/00
ACTIVE	C17102	-.--	1521-0000-008	CAP,UF .10 50V,DIP Z5U *	00/00
ACTIVE	C17103	-.--	1521-0000-008	CAP,UF .10 50V,DIP Z5U *	00/00
ACTIVE	C17104	-.--	1521-0000-008	CAP,UF .10 50V,DIP Z5U *	00/00
ACTIVE	C17105	-.--	1521-0000-008	CAP,UF .10 50V,DIP Z5U *	00/00
ACTIVE	C17106	-.--	1521-0000-008	CAP,UF .10 50V,DIP Z5U *	00/00

BILL OF MATERIAL LISTED BY REFERENCE DESIGNATOR
AS OF ALL DATES

ASSEMBLY PART NO.: 7010-9030-500
DESCRIPTION: PCB ASSY,VIDEO
ITEM MASTER REV: C ECO NO: #L144
REV OF THIS BOM: DATE OF LAST ECO: 11/23/92

STATUS	REFERENCE DESIGNATOR	QUANTITY PER ASSY	PART NUMBER	DESCRIPTION	EFFEC
ACTIVE	C17107	-.--	1521-0000-008	CAP,UF .10 50V,DIP Z5U *	00/00
ACTIVE	C17108	-.--	1521-0000-008	CAP,UF .10 50V,DIP Z5U *	00/00
ACTIVE	C17109	-.--	1521-0000-008	CAP,UF .10 50V,DIP Z5U *	00/00
ACTIVE	C17110	-.--	1521-0000-008	CAP,UF .10 50V,DIP Z5U *	00/00
ACTIVE	C17111	-.--	1521-0000-008	CAP,UF .10 50V,DIP Z5U *	00/00
ACTIVE	C17112	-.--	1521-0000-008	CAP,UF .10 50V,DIP Z5U *	00/00
ACTIVE	C17113	-.--	1521-0000-008	CAP,UF .10 50V,DIP Z5U *	00/00
ACTIVE	C17114	-.--	1627-2240-450	CAP,uF .22, 50V *	00/00
ACTIVE	C17115	-.--	1506-0101-017	CAP,pF 100, 100V NPO 5 *	00/00
ACTIVE	C17116	-.--	1506-0101-017	CAP,pF 100, 100V NPO 5 *	00/00
ACTIVE	C17117	-.--	1625-2230-100	CAP,UF .022, 100V X7R,5% *	00/00
ACTIVE	C17118	-.--	1625-2230-100	CAP,UF .022, 100V X7R,5% *	00/00
ACTIVE	C17119	-.--	1580-1000-200	CAP,UF, 10, 25V,ELE RDL	00/00
ACTIVE	C17120	-.--	1580-1000-200	CAP,UF, 10, 25V,ELE RDL	00/00
ACTIVE	C17121	-.--	1625-2230-100	CAP,UF .022, 100V X7R,5% *	00/00
ACTIVE	C17122	-.--	1625-2230-100	CAP,UF .022, 100V X7R,5% *	00/00
ACTIVE	C17123	-.--	1580-1000-200	CAP,UF, 10, 25V,ELE RDL	00/00
ACTIVE	C17124	-.--	1580-1000-200	CAP,UF, 10, 25V,ELE RDL	00/00
ACTIVE	C17125	-.--	1521-0000-008	CAP,UF .10 50V,DIP Z5U *	00/00
ACTIVE	C17126	1.00	1506-0100-017	CAP,PF 10, 100V,NPO, 5	00/00
ACTIVE	C17127	3.00	1506-0271-017	CAP,PF 270, 100V,NPO, 5	00/00
ACTIVE	C17128	-.--	1506-0271-017	CAP,PF 270, 100V,NPO, 5	00/00

LI,283,2.MDATAB01 IFR SYSTEMS, INC.
MON, JAN 4, 1993, 12:46 PM

BILL OF MATERIAL LISTED BY REFERENCE DESIGNATOR
AS OF ALL DATES

ASSEMBLY PART NO.: 7010-9030-500
DESCRIPTION: PCB ASSY,VIDEO
ITEM MASTER REV: C ECO NO: #L144
REV OF THIS BOM: DATE OF LAST ECO: 11/23/92

STATUS	REFERENCE DESIGNATOR	QUANTITY PER ASSY	PART NUMBER	DESCRIPTION		EFFEC
ACTIVE	C17129	-.--	1521-0000-008	CAP,UF .10 50V,DIP Z5U	*	00/00
ACTIVE	C17130	-.--	1506-0271-017	CAP,PF 270, 100V,NPO,	5	00/00
ACTIVE	C17131	-.--	1506-0101-017	CAP,pF 100, 100V NPO 5	*	00/00
ACTIVE	C17132	1.00	1506-0220-017	CAP,PF 22, 100V,NPO,	5	00/00
ACTIVE	C17133	-.--	1521-0000-008	CAP,UF .10 50V,DIP Z5U	*	00/00
ACTIVE	C17134	-.--	1521-0000-008	CAP,UF .10 50V,DIP Z5U	*	00/00
ACTIVE	C17135	-.--	1521-0000-008	CAP,UF .10 50V,DIP Z5U	*	00/00
ACTIVE	C17136	-.--	1521-0000-008	CAP,UF .10 50V,DIP Z5U	*	00/00
ACTIVE	C17137	-.--	1521-0000-008	CAP,UF .10 50V,DIP Z5U	*	00/00
ACTIVE	C17138	-.--	1627-2240-450	CAP,uF .22, 50V	*	00/00
ACTIVE	C17139	-.--	1627-2240-450	CAP,uF .22, 50V	*	00/00
ACTIVE	C17140	1.00	1506-0470-017	CAP, 47pF 100V NPO	*	00/00
ACTIVE	C17141	-.--	1506-0101-017	CAP,pF 100, 100V NPO 5	*	00/00
ACTIVE	C17142	-.--	1506-0101-017	CAP,pF 100, 100V NPO 5	*	00/00
ACTIVE	C17143	-.--	1521-0000-008	CAP,UF .10 50V,DIP Z5U	*	00/00
ACTIVE	C17144	-.--	1521-0000-008	CAP,UF .10 50V,DIP Z5U	*	00/00
ACTIVE	C17145	1.00	1506-0181-017	CAP, pF 180 100V NPO 5	*	00/00
ACTIVE	C17146	1.00	1506-0680-017	CAP,PF 68, 100V,NPO,	5	00/00
ACTIVE	C17147	-.--	1521-0000-008	CAP,UF .10 50V,DIP Z5U	*	00/00
ACTIVE	CR17001	6.00	4831-0000-001	DIODE,FDH333 ,SIGNAL,HCLL		00/00
ACTIVE	CR17002	-.--	4831-0000-001	DIODE,FDH333 ,SIGNAL,HCLL		00/00
ACTIVE	CR17003	4.00	4815-0000-003	DIODE, 1N4148 ,SIGNAL, 75PRV		00/00

BILL OF MATERIAL LISTED BY REFERENCE DESIGNATOR
AS OF ALL DATES

ASSEMBLY PART NO.: 7010-9030-500
DESCRIPTION: PCB ASSY,VIDEO
ITEM MASTER REV: C ECO NO: #L144
REV OF THIS BOM: DATE OF LAST ECO: 11/23/92

STATUS	REFERENCE DESIGNATOR	QUANTITY PER ASSY	PART NUMBER	DESCRIPTION	EFFEC
ACTIVE	CR17004	-.--	4815-0000-003	DIODE, 1N4148 ,SIGNAL, 75PRV	00/0(
ACTIVE	CR17005	-.--	4831-0000-001	DIODE,FDH333 ,SIGNAL,HCLL	00/0(
ACTIVE	CR17006	-.--	4831-0000-001	DIODE,FDH333 ,SIGNAL,HCLL	00/0(
ACTIVE	CR17007	1.00	4818-0000-015	DIODE,LM329C,6.9V ZENER REF *	00/0(
ACTIVE	CR17008	16.00	4816-0000-001	DIODE,5082-2800,S BAR, 70VBR *	00/0(
ACTIVE	CR17009	-.--	4816-0000-001	DIODE,5082-2800,S BAR, 70VBR *	00/0(
ACTIVE	CR17010	-.--	4831-0000-001	DIODE,FDH333 ,SIGNAL,HCLL	00/0(
ACTIVE	CR17011	-.--	4815-0000-003	DIODE, 1N4148 ,SIGNAL, 75PRV	00/0(
ACTIVE	CR17012	-.--	4816-0000-001	DIODE,5082-2800,S BAR, 70VBR *	00/0(
ACTIVE	CR17013	-.--	4831-0000-001	DIODE,FDH333 ,SIGNAL,HCLL	00/0(
ACTIVE	CR17014	-.--	4816-0000-001	DIODE,5082-2800,S BAR, 70VBR *	00/0(
ACTIVE	CR17015	-.--	4816-0000-001	DIODE,5082-2800,S BAR, 70VBR *	00/0(
ACTIVE	CR17016	-.--	4816-0000-001	DIODE,5082-2800,S BAR, 70VBR *	00/0(
ACTIVE	CR17017	-.--	4816-0000-001	DIODE,5082-2800,S BAR, 70VBR *	00/0(
ACTIVE	CR17018	-.--	4816-0000-001	DIODE,5082-2800,S BAR, 70VBR *	00/0(
ACTIVE	CR17019	-.--	4816-0000-001	DIODE,5082-2800,S BAR, 70VBR *	00/0(
ACTIVE	CR17020	-.--	4816-0000-001	DIODE,5082-2800,S BAR, 70VBR *	00/0(
ACTIVE	CR17021	-.--	4816-0000-001	DIODE,5082-2800,S BAR, 70VBR *	00/0(
ACTIVE	CR17022	-.--	4816-0000-001	DIODE,5082-2800,S BAR, 70VBR *	00/0(
ACTIVE	CR17023	-.--	4816-0000-001	DIODE,5082-2800,S BAR, 70VBR *	00/0(
ACTIVE	CR17024	-.--	4816-0000-001	DIODE,5082-2800,S BAR, 70VBR *	00/0(
ACTIVE	CR17025	-.--	4816-0000-001	DIODE,5082-2800,S BAR, 70VBR *	00/0(

LI,283,2.MDATAB01 IFR SYSTEMS, INC.
MON, JAN 4, 1993, 12:46 PM

BILL OF MATERIAL LISTED BY REFERENCE DESIGNATOR
AS OF ALL DATES

ASSEMBLY PART NO.: 7010-9030-500
DESCRIPTION: PCB ASSY,VIDEO
ITEM MASTER REV: C ECO NO: #L144
REV OF THIS BOM: DATE OF LAST ECO: 11/23/92

STATUS	REFERENCE DESIGNATOR	QUANTITY PER ASSY	PART NUMBER	DESCRIPTION		EFFEC
ACTIVE	CR17026	-.--	4815-0000-003	DIODE, 1N4148 ,SIGNAL, 75PRV		00/0(
ACTIVE	CR17027	-.--	4816-0000-001	DIODE,5082-2800,S BAR, 70VBR	*	00/0(
ACTIVE	J17001	7.00	2200-2010-400	CONN,M SMB,PC MTG,STR,.453LG		00/0(
ACTIVE	J17002	1.00	2200-1920-100	CONN,JACK SMA PCM STR	*	00/0(
ACTIVE	J17003	1.00	2115-0000-016	WAFER,PCB,.100C,STR,10-P		00/0(
ACTIVE	J17004	-.--	2200-2010-400	CONN,M SMB,PC MTG,STR,.453LG		00/0(
ACTIVE	J17005	-.--	2200-2010-400	CONN,M SMB,PC MTG,STR,.453LG		00/0(
ACTIVE	J17006	-.--	2200-2010-400	CONN,M SMB,PC MTG,STR,.453LG		00/0(
ACTIVE	J17007	-.--	2200-2010-400	CONN,M SMB,PC MTG,STR,.453LG		00/0(
ACTIVE	J17008	-.--	2200-2010-400	CONN,M SMB,PC MTG,STR,.453LG		00/0(
ACTIVE	J17009	-.--	2200-2010-400	CONN,M SMB,PC MTG,STR,.453LG		00/0(
ACTIVE	Q17001	1.00	4801-0000-001	TRANSISTOR NPN HS SW	*	00/0(
ACTIVE	Q17002	2.00	4809-0000-030	TRANS, LM394 NPN	*	00/0(
ACTIVE	Q17003	-.--	4809-0000-030	TRANS, LM394 NPN	*	00/0(
ACTIVE	Q17004	1.00	4807-0000-002	TRANS, 2N3905 ,PNP HS SW		00/0(
ACTIVE	Q17005	1.00	4807-0000-001	TRANS, 2N3903 ,NPN HS SW		00/0(
ACTIVE	R17001	9.00	4701-0510-003	RES, 5, 1/8W, 51 OHM		00/0(
ACTIVE	R17002	14.00	4701-0101-003	RES, 5, 1/8W, 100 OHM	*	00/0(
ACTIVE	R17003	3.00	4701-0151-003	RES, 5, 1/8W, 150 OHM		00/0(
ACTIVE	R17004	13.00	4701-0471-003	RES, 5, 1/8W, 470 OHM		00/0(
ACTIVE	R17005	-.--	4701-0471-003	RES, 5, 1/8W, 470 OHM		00/0(
ACTIVE	R17006	2.00	4752-0102-002	POT 1K OHM		00/0(

BILL OF MATERIAL LISTED BY REFERENCE DESIGNATOR
AS OF ALL DATES

ASSEMBLY PART NO.: 7010-9030-500
DESCRIPTION: PCB ASSY,VIDEO
ITEM MASTER REV: C ECO NO: #L144
REV OF THIS BOM: DATE OF LAST ECO: 11/23/92

STATUS	REFERENCE DESIGNATOR	QUANTITY PER ASSY	PART NUMBER	DESCRIPTION			EFFEC
ACTIVE	R17007	3.00	4702-0100-003	RES, 5, 1/4W,	10 OHM	*	00/00
ACTIVE	R17008	3.00	4752-0201-002	POT, 200 OHM			00/00
ACTIVE	R17009	-.--	4752-0201-002	POT, 200 OHM			00/00
ACTIVE	R17010	-.--	4752-0201-002	POT, 200 OHM			00/00
ACTIVE	R17011	10.00	4701-0152-003	RES, 5, 1/8W,	1.5K OHM	*	00/00
ACTIVE	R17012	-.--	4701-0152-003	RES, 5, 1/8W,	1.5K OHM	*	00/00
ACTIVE	R17013	4.00	4701-0274-003	RES, 5, 1/8W,	270K OHM		00/00
ACTIVE	R17014	4.00	4701-0184-003	RES, 5, 1/8W,	180K OHM		00/00
ACTIVE	R17015	2.00	4701-0185-003	RES, 5, 1/8W,	1.8MEG OHM		00/00
ACTIVE	R17016	13.00	4701-0102-003	RES, 5, 1/8W,	1.0K OHM		00/00
ACTIVE	R17017	1.00	4702-0222-003	RES, 5%, 1/4W	2.2K OHM	*	00/00
ACTIVE	R17018	-.--	4752-0102-002	POT 1K OHM			00/00
ACTIVE	R17019	-.--	4701-0471-003	RES, 5, 1/8W,	470 OHM		00/00
ACTIVE	R17020	-.--	4701-0471-003	RES, 5, 1/8W,	470 OHM		00/00
ACTIVE	R17021	-.--	4701-0102-003	RES, 5, 1/8W,	1.0K OHM		00/00
ACTIVE	R17022	-.--	4702-0100-003	RES, 5, 1/4W,	10 OHM	*	00/00
ACTIVE	R17023	1.00	4701-0331-003	RES, 5, 1/8W,	330 OHM		00/00
ACTIVE	R17024	9.00	4701-0121-003	RES, 5, 1/8W,	120 OHM		00/00
ACTIVE	R17025	2.00	4701-0272-003	RES, 5, 1/8W,	2.7K OHM		00/00
ACTIVE	R17026	8.00	4701-0181-003	RES, 5, 1/8W,	180 OHM		00/00
ACTIVE	R17027	-.--	4701-0121-003	RES, 5, 1/8W,	120 OHM		00/00
ACTIVE	R17028	-.--	4701-0272-003	RES, 5, 1/8W,	2.7K OHM		00/00

BILL OF MATERIAL LISTED BY REFERENCE DESIGNATOR
AS OF ALL DATES

ASSEMBLY PART NO.: 7010-9030-500
DESCRIPTION: PCB ASSY,VIDEO
ITEM MASTER REV: C ECO NO: #L144
REV OF THIS BOM: DATE OF LAST ECO: 11/23/92

STATUS	REFERENCE DESIGNATOR	QUANTITY PER ASSY	PART NUMBER	DESCRIPTION		EFFEC
ACTIVE	R17029	2.00	4701-0104-003	RES, 5, 1/8W, 100K OHM		00/00
ACTIVE	R17030	-.--	4701-0184-003	RES, 5, 1/8W, 180K OHM		00/00
ACTIVE	R17031	2.00	4702-0102-003	RES, 5, 1/4W, 1.0K OHM		00/00
ACTIVE	R17032	-.--	4701-0102-003	RES, 5, 1/8W, 1.0K OHM		00/00
ACTIVE	R17033	3.00	4706-1002-001	RES, 1, 1/4W, 10.0K OHM	*	00/00
ACTIVE	R17034	1.00	4706-1783-001	RES, 1, 1/4W, 178K OHM		00/00
ACTIVE	R17035	-.--	4706-1002-001	RES, 1, 1/4W, 10.0K OHM	*	00/00
ACTIVE	R17036	-.--	4701-0471-003	RES, 5, 1/8W, 470 OHM		00/00
ACTIVE	R17037	8.00	4701-0103-003	RES, 5, 1/8W, 10K OHM	*	00/00
ACTIVE	R17038	2.00	4701-0479-003	RES, 5, 1/8W, 4.7 OHM		00/00
ACTIVE	R17039	-.--	4701-0510-003	RES, 5, 1/8W, 51 OHM		00/00
ACTIVE	R17040	-.--	4701-0510-003	RES, 5, 1/8W, 51 OHM		00/00
ACTIVE	R17041	-.--	4701-0101-003	RES, 5, 1/8W, 100 OHM	*	00/00
ACTIVE	R17042	-.--	4701-0152-003	RES, 5, 1/8W, 1.5K OHM	*	00/00
ACTIVE	R17043	-.--	4701-0151-003	RES, 5, 1/8W, 150 OHM		00/00
ACTIVE	R17044	-.--	4701-0152-003	RES, 5, 1/8W, 1.5K OHM	*	00/00
ACTIVE	R17045	3.00	4701-0512-002	RES, 5, 1/8W, 5.1K OHM		00/00
ACTIVE	R17046	-.--	4702-0100-003	RES, 5, 1/4W, 10 OHM	*	00/00
ACTIVE	R17047	-.--	4701-0102-003	RES, 5, 1/8W, 1.0K OHM		00/00
ACTIVE	R17048	-.--	4701-0102-003	RES, 5, 1/8W, 1.0K OHM		00/00
ACTIVE	R17049	-.--	4701-0151-003	RES, 5, 1/8W, 150 OHM		00/00
ACTIVE	R17050	3.00	4701-0391-003	RES, 5, 1/8W, 390 OHM		00/00

BILL OF MATERIAL LISTED BY REFERENCE DESIGNATOR
AS OF ALL DATES

ASSEMBLY PART NO.: 7010-9030-500
DESCRIPTION: PCB ASSY,VIDEO
ITEM MASTER REV: C ECO NO: #L144
REV OF THIS BOM: DATE OF LAST ECO: 11/23/92

STATUS	REFERENCE DESIGNATOR	QUANTITY PER ASSY	PART NUMBER	DESCRIPTION	EFFEC
ACTIVE	R17051	-.--	4701-0152-003	RES, 5, 1/8W, 1.5K OHM *	00/00
ACTIVE	R17052	-.--	4701-0184-003	RES, 5, 1/8W, 180K OHM	00/00
ACTIVE	R17053	2.00	4706-1501-001	RES, 1, 1/4W, 1.50K OHM	00/00
ACTIVE	R17054	-.--	4701-0121-003	RES, 5, 1/8W, 120 OHM	00/00
ACTIVE	R17055	4.00	4701-0271-003	RES, 5, 1/8W, 270 OHM	00/00
ACTIVE	R17056	3.00	4701-0680-003	RES, 5, 1/8W, 68 OHM	00/00
ACTIVE	R17057	3.00	4702-0820-003	RES, 5%, 1/4W 82 OHM *	00/00
ACTIVE	R17058	-.--	4701-0391-003	RES, 5, 1/8W, 390 OHM	00/00
ACTIVE	R17059	-.--	4701-0101-003	RES, 5, 1/8W, 100 OHM *	00/0(
ACTIVE	R17060	-.--	4701-0102-003	RES, 5, 1/8W, 1.0K OHM	00/0(
ACTIVE	R17061	-.--	4701-0103-003	RES, 5, 1/8W, 10K OHM *	00/0(
ACTIVE	R17062	-.--	4701-0103-003	RES, 5, 1/8W, 10K OHM *	00/0(
ACTIVE	R17063	-.--	4701-0103-003	RES, 5, 1/8W, 10K OHM *	00/0(
ACTIVE	R17064	-.--	4701-0471-003	RES, 5, 1/8W, 470 OHM	00/0(
ACTIVE	R17065	-.--	4701-0680-003	RES, 5, 1/8W, 68 OHM	00/0(
ACTIVE	R17066	-.--	4701-0271-003	RES, 5, 1/8W, 270 OHM	00/0(
ACTIVE	R17067	-.--	4702-0820-003	RES, 5%, 1/4W 82 OHM *	00/0(
ACTIVE	R17068	2.00	4701-0561-003	RES, 5, 1/8W, 560 OHM	00/0(
ACTIVE	R17069	3.00	4701-0332-003	RES, 5, 1/8W, 3.3K OHM *	00/0(
ACTIVE	R17070	-.--	4701-0332-003	RES, 5, 1/8W, 3.3K OHM *	00/0(
ACTIVE	R17071	2.00	4701-0683-003	RES, 5, 1/8W, 68K OHM	00/0(
ACTIVE	R17072	-.--	4701-0561-003	RES, 5, 1/8W, 560 OHM	00/0(

LI,283,2.MDATAB01 IFR SYSTEMS, INC.
MON, JAN 4, 1993, 12:46 PM

BILL OF MATERIAL LISTED BY REFERENCE DESIGNATOR
AS OF ALL DATES

ASSEMBLY PART NO.: 7010-9030-500
DESCRIPTION: PCB ASSY,VIDEO
ITEM MASTER REV: C ECO NO: #L144
REV OF THIS BOM: DATE OF LAST ECO: 11/23/92

STATUS	REFERENCE DESIGNATOR	QUANTITY PER ASSY	PART NUMBER	DESCRIPTION			EFFEC
ACTIVE	R17073	4.00	4706-3832-001	RES, 1, 1/4W,	38.3K	OHM	00/00
ACTIVE	R17074	-.--	4706-3832-001	RES, 1, 1/4W,	38.3K	OHM	00/00
ACTIVE	R17075	-.--	4701-0512-002	RES, 5, 1/8W,	5.1K	OHM	00/00
ACTIVE	R17076	-.--	4701-0101-003	RES, 5, 1/8W,	100 OHM	*	00/00
ACTIVE	R17077	-.--	4701-0101-003	RES, 5, 1/8W,	100 OHM	*	00/00
ACTIVE	R17078	-.--	4701-0512-002	RES, 5, 1/8W,	5.1K	OHM	00/00
ACTIVE	R17079	4.00	4752-0103-002	POT 10K OHM			00/00
ACTIVE	R17080	-.--	4752-0103-002	POT 10K OHM			00/00
ACTIVE	R17081	-.--	4701-0683-003	RES, 5, 1/8W,	68K	OHM	00/00
ACTIVE	R17082	-.--	4701-0332-003	RES, 5, 1/8W,	3.3K OHM	*	00/00
ACTIVE	R17083	-.--	4706-3832-001	RES, 1, 1/4W,	38.3K	OHM	00/00
ACTIVE	R17084	-.--	4706-3832-001	RES, 1, 1/4W,	38.3K	OHM	00/00
ACTIVE	R17085	1.00	4706-2941-001	RES, 1, 1/4,	2.94K	OHM	00/00
ACTIVE	R17086	-.--	4701-0274-003	RES, 5, 1/8W,	270K	OHM	00/00
ACTIVE	R17087	-.--	4701-0274-003	RES, 5, 1/8W,	270K	OHM	00/00
ACTIVE	R17088	-.--	4701-0101-003	RES, 5, 1/8W,	100 OHM	*	00/00
ACTIVE	R17089	1.00	4706-7150-001	RES, 1, 1/4W,	715	OHM	00/00
ACTIVE	R17090	1.00	4706-4990-001	RES, 1, 1/4W	499 OHM	*	00/00
ACTIVE	R17091	-.--	4701-0101-003	RES, 5, 1/8W,	100 OHM	*	00/00
ACTIVE	R17092	1.00	4702-0821-003	RES, 5, 1/4W,	820	OHM	00/00
ACTIVE	R17093	1.00	4706-3401-001	RES, 1, 1/4W,	3.40K	OHM	00/00
ACTIVE	R17094	-.--	4701-0102-003	RES, 5, 1/8W,	1.0K	OHM	00/00

BILL OF MATERIAL LISTED BY REFERENCE DESIGNATOR
AS OF ALL DATES

ASSEMBLY PART NO.: 7010-9030-500
DESCRIPTION: PCB ASSY,VIDEO
ITEM MASTER REV: C ECO NO: #L144
REV OF THIS BOM: DATE OF LAST ECO: 11/23/92

STATUS	REFERENCE DESIGNATOR	QUANTITY PER ASSY	PART NUMBER	DESCRIPTION		EFFEC
ACTIVE	R17095	-.--	4701-0102-003	RES, 5, 1/8W, 1.0K OHM		00/0(
ACTIVE	R17096	-.--	4701-0101-003	RES, 5, 1/8W, 100 OHM	*	00/0(
ACTIVE	R17097	-.--	4701-0101-003	RES, 5, 1/8W, 100 OHM	*	00/0(
ACTIVE	R17098	-.--	4701-0181-003	RES, 5, 1/8W, 180 OHM		00/0(
ACTIVE	R17099	-.--	4701-0181-003	RES, 5, 1/8W, 180 OHM		00/0(
ACTIVE	R17100	-.--	4701-0181-003	RES, 5, 1/8W, 180 OHM		00/0(
ACTIVE	R17101	-.--	4701-0152-003	RES, 5, 1/8W, 1.5K OHM	*	00/0(
ACTIVE	R17102	-.--	4701-0152-003	RES, 5, 1/8W, 1.5K OHM	*	00/0(
ACTIVE	R17103	-.--	4701-0102-003	RES, 5, 1/8W, 1.0K OHM		00/0(
ACTIVE	R17104	-.--	4701-0101-003	RES, 5, 1/8W, 100 OHM	*	00/0(
ACTIVE	R17105	2.00	4701-0222-003	RES, 5, 1/8W, 2.2K OHM		00/0(
ACTIVE	R17106	-.--	4701-0184-003	RES, 5, 1/8W, 180K OHM		00/0(
ACTIVE	R17107	-.--	4701-0185-003	RES, 5, 1/8W, 1.8MEG OHM		00/0(
ACTIVE	R17108	-.--	4701-0274-003	RES, 5, 1/8W, 270K OHM		00/0(
ACTIVE	R17109	1.00	4706-5901-001	RES, 1, 1/4W, 5.90K OHM		00/0(
ACTIVE	R17110	-.--	4701-0181-003	RES, 5, 1/8W, 180 OHM		00/0(
ACTIVE	R17111	-.--	4701-0181-003	RES, 5, 1/8W, 180 OHM		00/0(
ACTIVE	R17112	-.--	4701-0121-003	RES, 5, 1/8W, 120 OHM		00/0(
ACTIVE	R17113	-.--	4701-0152-003	RES, 5, 1/8W, 1.5K OHM	*	00/0(
ACTIVE	R17114	-.--	4701-0102-003	RES, 5, 1/8W, 1.0K OHM		00/0(
ACTIVE	R17115	-.--	4701-0222-003	RES, 5, 1/8W, 2.2K OHM		00/0(
ACTIVE	R17116	-.--	4701-0479-003	RES, 5, 1/8W, 4.7 OHM		00/0(

LI,283,2.MDATAB01 IFR SYSTEMS, INC.
MON, JAN 4, 1993, 12:46 PM

BILL OF MATERIAL LISTED BY REFERENCE DESIGNATOR
AS OF ALL DATES

ASSEMBLY PART NO.: 7010-9030-500
DESCRIPTION: PCB ASSY,VIDEO
ITEM MASTER REV: C ECO NO: #L144
REV OF THIS BOM: DATE OF LAST ECO: 11/23/92

STATUS	REFERENCE DESIGNATOR	QUANTITY PER ASSY	PART NUMBER	DESCRIPTION		EFFEC
ACTIVE	R17117	-.--	4701-0510-003	RES, 5, 1/8W, 51 OHM		00/00
ACTIVE	R17118	-.--	4701-0510-003	RES, 5, 1/8W, 51 OHM		00/00
ACTIVE	R17119	-.--	4701-0103-003	RES, 5, 1/8W, 10K OHM	*	00/00
ACTIVE	R17120	-.--	4701-0103-003	RES, 5, 1/8W, 10K OHM	*	00/00
ACTIVE	R17121	-.--	4701-0103-003	RES, 5, 1/8W, 10K OHM	*	00/00
ACTIVE	R17122	-.--	4701-0102-003	RES, 5, 1/8W, 1.0K OHM		00/00
ACTIVE	R17123	-.--	4702-0820-003	RES, 5%, 1/4W 82 OHM	*	00/00
ACTIVE	R17124	2.00	4702-0680-003	RES, 5%, 1/4W, 68 OHM	*	00/00
ACTIVE	R17125	-.--	4702-0680-003	RES, 5%, 1/4W, 68 OHM	*	00/00
ACTIVE	R17126	2.00	4701-0472-003	RES, 5, 1/8W, 4.7K OHM		00/00
ACTIVE	R17127	1.00	4701-0333-003	RES, 5, 1/8W, 33K OHM		00/00
ACTIVE	R17128	1.00	4752-0501-002	POT, 500 OHM		00/00
ACTIVE	R17129	-.--	4701-0103-003	RES, 5, 1/8W, 10K OHM	*	00/00
ACTIVE	R17130	-.--	4701-0680-003	RES, 5, 1/8W, 68 OHM		00/00
ACTIVE	R17131	-.--	4701-0181-003	RES, 5, 1/8W, 180 OHM		00/00
ACTIVE	R17132	-.--	4701-0391-003	RES, 5, 1/8W, 390 OHM		00/00
ACTIVE	R17133	-.--	4701-0181-003	RES, 5, 1/8W, 180 OHM		00/00
ACTIVE	R17134	-.--	4701-0152-003	RES, 5, 1/8W, 1.5K OHM	*	00/00
ACTIVE	R17135	-.--	4701-0152-003	RES, 5, 1/8W, 1.5K OHM	*	00/00
ACTIVE	R17136	1.00	4701-0221-003	RES, 5, 1/8W, 220 OHM		00/00
ACTIVE	R17137	-.--	4706-1501-001	RES, 1, 1/4W, 1.50K OHM		00/00
ACTIVE	R17138	-.--	4701-0121-003	RES, 5, 1/8W, 120 OHM		00/00

LI,283,2.MDATAB01 IFR SYSTEMS, INC.
MON, JAN 4, 1993, 12:46 PM

BILL OF MATERIAL LISTED BY REFERENCE DESIGNATOR
AS OF ALL DATES

ASSEMBLY PART NO.: 7010-9030-500
DESCRIPTION: PCB ASSY,VIDEO
ITEM MASTER REV: C ECO NO: #L144
REV OF THIS BOM: DATE OF LAST ECO: 11/23/92

STATUS	REFERENCE DESIGNATOR	QUANTITY PER ASSY	PART NUMBER	DESCRIPTION	EFFEC
ACTIVE	R17139	-.--	4706-1002-001	RES, 1, 1/4W, 10.0K OHM *	00/00
ACTIVE	R17140	1.00	4706-3830-001	RES, 1, 1/4W, 383 OHM	00/00
ACTIVE	R17141	-.--	4701-0104-003	RES, 5, 1/8W, 100K OHM	00/00
ACTIVE	R17142	-.--	4702-0102-003	RES, 5, 1/4W, 1.0K OHM	00/00
ACTIVE	R17143	1.00	4752-0104-002	POT 100K OHM	00/00
ACTIVE	R17144	-.--	0002-0000-000	*** REF DESIG NOT USED ***	00/00
ACTIVE	R17145	1.00	4701-0154-003	RES, 5, 1/8W, 150K OHM	00/00
ACTIVE	R17146	-.--	4701-0101-003	RES, 5, 1/8W, 100 OHM *	00/00
ACTIVE	R17147	-.--	4701-0121-003	RES, 5, 1/8W, 120 OHM	00/00
ACTIVE	R17148	2.00	4701-0223-003	RES, 5, 1/8W, 22K OHM	00/00
ACTIVE	R17149	-.--	4752-0103-002	POT 10K OHM	00/00
ACTIVE	R17150	-.--	4752-0103-002	POT 10K OHM	00/00
ACTIVE	R17151	-.--	4701-0471-003	RES, 5, 1/8W, 470 OHM	00/00
ACTIVE	R17152	-.--	4701-0471-003	RES, 5, 1/8W, 470 OHM	00/00
ACTIVE	R17153	-.--	4701-0510-003	RES, 5, 1/8W, 51 OHM	00/00
ACTIVE	R17154	-.--	4701-0510-003	RES, 5, 1/8W, 51 OHM	00/00
ACTIVE	R17155	-.--	4701-0471-003	RES, 5, 1/8W, 470 OHM	00/00
ACTIVE	R17156	-.--	4701-0471-003	RES, 5, 1/8W, 470 OHM	00/00
ACTIVE	R17157	-.--	4701-0510-003	RES, 5, 1/8W, 51 OHM	00/00
ACTIVE	R17158	-.--	4701-0510-003	RES, 5, 1/8W, 51 OHM	00/00
ACTIVE	R17159	-.--	4701-0223-003	RES, 5, 1/8W, 22K OHM	00/00
ACTIVE	R17160	-.--	4701-0121-003	RES, 5, 1/8W, 120 OHM	00/00

BILL OF MATERIAL LISTED BY REFERENCE DESIGNATOR
AS OF ALL DATES

ASSEMBLY PART NO.: 7010-9030-500
DESCRIPTION: PCB ASSY,VIDEO
ITEM MASTER REV: C ECO NO: #L144
REV OF THIS BOM: DATE OF LAST ECO: 11/23/92

STATUS	REFERENCE DESIGNATOR	QUANTITY PER ASSY	PART NUMBER	DESCRIPTION		EFFEC
ACTIVE	R17161	-.--	4701-0121-003	RES, 5, 1/8W, 120 OHM		00/00
ACTIVE	R17162	-.--	4701-0271-003	RES, 5, 1/8W, 270 OHM		00/00
ACTIVE	R17163	-.--	4701-0121-003	RES, 5, 1/8W, 120 OHM		00/00
ACTIVE	R17164	-.--	4701-0271-003	RES, 5, 1/8W, 270 OHM		00/00
ACTIVE	R17165	-.--	4701-0471-003	RES, 5, 1/8W, 470 OHM		00/00
ACTIVE	R17166	-.--	4701-0471-003	RES, 5, 1/8W, 470 OHM		00/00
ACTIVE	R17167	-.--	4701-0102-003	RES, 5, 1/8W, 1.0K OHM		00/00
ACTIVE	R17168	-.--	4701-0472-003	RES, 5, 1/8W, 4.7K OHM		00/00
ACTIVE	R17169	-.--	4701-0102-003	RES, 5, 1/8W, 1.0K OHM		00/00
ACTIVE	R17170	-.--	4701-0101-003	RES, 5, 1/8W, 100 OHM	*	00/00
ACTIVE	R17171	-.--	4701-0101-003	RES, 5, 1/8W, 100 OHM	*	00/00
ACTIVE	R17172	-.--	4701-0101-003	RES, 5, 1/8W, 100 OHM	*	00/00
ACTIVE	R17173	-.--	4701-0471-003	RES, 5, 1/8W, 470 OHM		00/00
ACTIVE	R17174	1.00	4800-0000-003	THERM,2KOHM,25/125=19.8,2H-202		00/00
ACTIVE	R17175	1.00	4701-0563-003	RES, 5, 1/8W 56K OHM	*	00/00
ACTIVE	TP17001	19.00	2114-0000-007	POST,GANG,PCB,.025SQ,.443LG	*	00/00
ACTIVE	TP17002	-.--	2114-0000-007	POST,GANG,PCB,.025SQ,.443LG	*	00/00
ACTIVE	TP17003	-.--	2114-0000-007	POST,GANG,PCB,.025SQ,.443LG	*	00/00
ACTIVE	TP17004	-.--	2114-0000-007	POST,GANG,PCB,.025SQ,.443LG	*	00/00
ACTIVE	TP17005	-.--	2114-0000-007	POST,GANG,PCB,.025SQ,.443LG	*	00/00
ACTIVE	TP17006	-.--	2114-0000-007	POST,GANG,PCB,.025SQ,.443LG	*	00/00
ACTIVE	TP17007	-.--	2114-0000-007	POST,GANG,PCB,.025SQ,.443LG	*	00/00

LI,283,2.MDATAB01 IFR SYSTEMS, INC.
MON, JAN 4, 1993, 12:46 PM

BILL OF MATERIAL LISTED BY REFERENCE DESIGNATOR
AS OF ALL DATES

ASSEMBLY PART NO.: 7010-9030-500
DESCRIPTION: PCB ASSY,VIDEO
ITEM MASTER REV: C ECO NO: #L144
REV OF THIS BOM: DATE OF LAST ECO: 11/23/92

STATUS	REFERENCE DESIGNATOR	QUANTITY PER ASSY	PART NUMBER	DESCRIPTION	EFFEC
ACTIVE	TP17008	-.--	2114-0000-007	POST,GANG,PCB,.025SQ,.443LG *	00/00
ACTIVE	TP17009	-.--	2114-0000-007	POST,GANG,PCB,.025SQ,.443LG *	00/00
ACTIVE	TP17010	-.--	2114-0000-007	POST,GANG,PCB,.025SQ,.443LG *	00/00
ACTIVE	TP17011	-.--	2114-0000-007	POST,GANG,PCB,.025SQ,.443LG *	00/00
ACTIVE	TP17012	-.--	2114-0000-007	POST,GANG,PCB,.025SQ,.443LG *	00/00
ACTIVE	TP17013	-.--	2114-0000-007	POST,GANG,PCB,.025SQ,.443LG *	00/00
ACTIVE	TP17014	-.--	2114-0000-007	POST,GANG,PCB,.025SQ,.443LG *	00/00
ACTIVE	TP17015	-.--	2114-0000-007	POST,GANG,PCB,.025SQ,.443LG *	00/00
ACTIVE	TP17016	-.--	2114-0000-007	POST,GANG,PCB,.025SQ,.443LG *	00/00
ACTIVE	TP17017	-.--	2114-0000-007	POST,GANG,PCB,.025SQ,.443LG *	00/00
ACTIVE	TP17018	-.--	2114-0000-007	POST,GANG,PCB,.025SQ,.443LG *	00/00
ACTIVE	TP17019	-.--	2114-0000-007	POST,GANG,PCB,.025SQ,.443LG *	00/00
ACTIVE	U17001	3.00	3224-1203-000	IC,RGB VIDEO AMPLIFIER *	00/00
ACTIVE	U17002	-.--	3224-1203-000	IC,RGB VIDEO AMPLIFIER *	00/00
ACTIVE	U17003	-.--	3224-1203-000	IC,RGB VIDEO AMPLIFIER *	00/00
ACTIVE	U17004	4.00	3222-0733-000	IC,LM733 DIFF AMP 120MHZ BW *	00/00
ACTIVE	U17005	2.00	3223-0004-000	IC,319,HI SPEED DUAL VOLT COMP	00/00
ACTIVE	U17006	-.--	3223-0004-000	IC,319,HI SPEED DUAL VOLT COMP	00/00
ACTIVE	U17007	-.--	3222-0733-000	IC,LM733 DIFF AMP 120MHZ BW *	00/00
ACTIVE	U17008	4.00	3133-0000-024	IC,3130,BIMOS OP AMP,PLAST DIP	00/00
ACTIVE	U17009	2.00	3214-9474-000	IC,74HCT74,DUAL D FLIP-FLOP	00/00
ACTIVE	U17010	-.--	3133-0000-024	IC,3130,BIMOS OP AMP,PLAST DIP	00/00

BILL OF MATERIAL LISTED BY REFERENCE DESIGNATOR
AS OF ALL DATES

ASSEMBLY PART NO.: 7010-9030-500
DESCRIPTION: PCB ASSY,VIDEO
ITEM MASTER REV: C ECO NO: #L144
REV OF THIS BOM: DATE OF LAST ECO: 11/23/92

STATUS	REFERENCE DESIGNATOR	QUANTITY PER ASSY	PART NUMBER	DESCRIPTION	EFFEC
ACTIVE	U17011	-.--	3222-0733-000	IC,LM733 DIFF AMP 120MHZ BW *	00/00
ACTIVE	U17012	-.--	3133-0000-024	IC,3130,BIMOS OP AMP,PLAST DIP	00/00
ACTIVE	U17013	1.00	3214-4051-100	IC,4051B,8-CH ANALOG MPLXR	00/00
ACTIVE	U17014	4.00	3130-0000-037	IC,9686 TTL LATCH COMPARATOR *	00/00
ACTIVE	U17015	-.--	3133-0000-024	IC,3130,BIMOS OP AMP,PLAST DIP	00/00
ACTIVE	U17016	-.--	3130-0000-037	IC,9686 TTL LATCH COMPARATOR *	00/00
ACTIVE	U17017	1.00	3215-0000-001	IC,74F04,FAST HEX INVERTER	00/00
ACTIVE	U17018	-.--	3214-9474-000	IC,74HCT74,DUAL D FLIP-FLOP	00/00
ACTIVE	U17019	-.--	3130-0000-037	IC,9686 TTL LATCH COMPARATOR *	00/00
ACTIVE	U17020	2.00	3215-0000-000	IC,74F00 QUAD 2-INPUT NAND *	00/00
ACTIVE	U17021	1.00	3224-0001-000	IC,7905C,1.5A -5V REGULATOR	00/00
ACTIVE	U17022	-.--	3215-0000-000	IC,74F00 QUAD 2-INPUT NAND *	00/00
ACTIVE	U17023	-.--	3222-0733-000	IC,LM733 DIFF AMP 120MHZ BW *	00/00
ACTIVE	U17024	1.00	3214-9412-301	IC,74HCT123 DUAL RETRIG 1SHOT*	00/00
ACTIVE	U17025	2.00	3224-0008-000	IC,5V 3-TERM REG TO-92 *	00/00
ACTIVE	U17026	4.00	3223-0308-000	IC, PRECISION OP AMP *	00/00
ACTIVE	U17027	-.--	3223-0308-000	IC, PRECISION OP AMP *	00/00
ACTIVE	U17028	-.--	3223-0308-000	IC, PRECISION OP AMP *	00/00
ACTIVE	U17029	-.--	3223-0308-000	IC, PRECISION OP AMP *	00/00
ACTIVE	U17030	-.--	3130-0000-037	IC,9686 TTL LATCH COMPARATOR *	00/00
ACTIVE	U17031	-.--	3224-0008-000	IC,5V 3-TERM REG TO-92 *	00/00

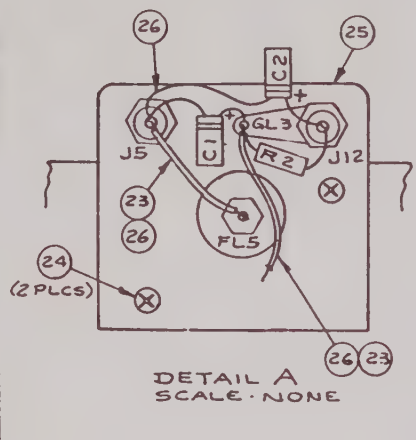

DETAIL A
SCALE - NONE

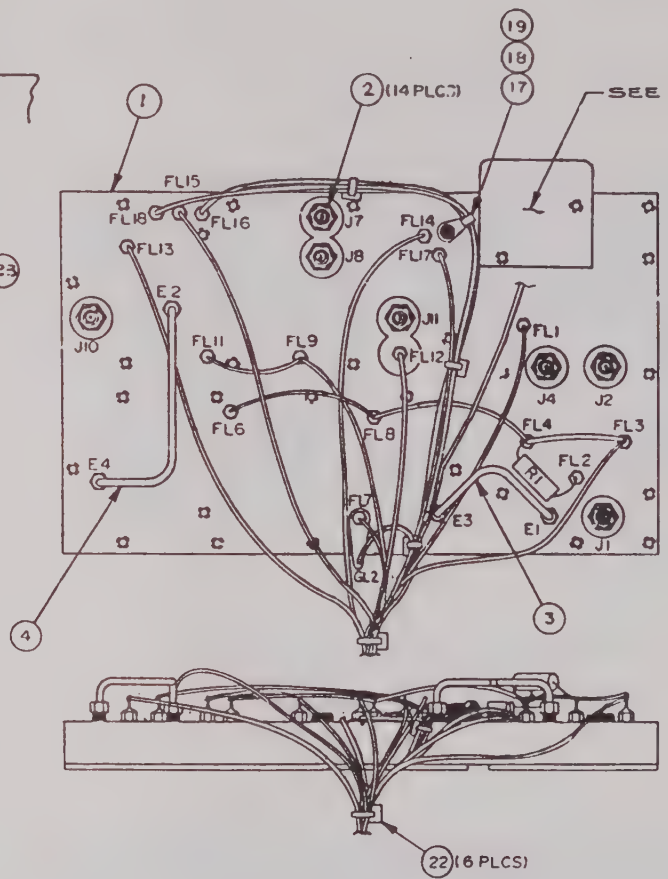

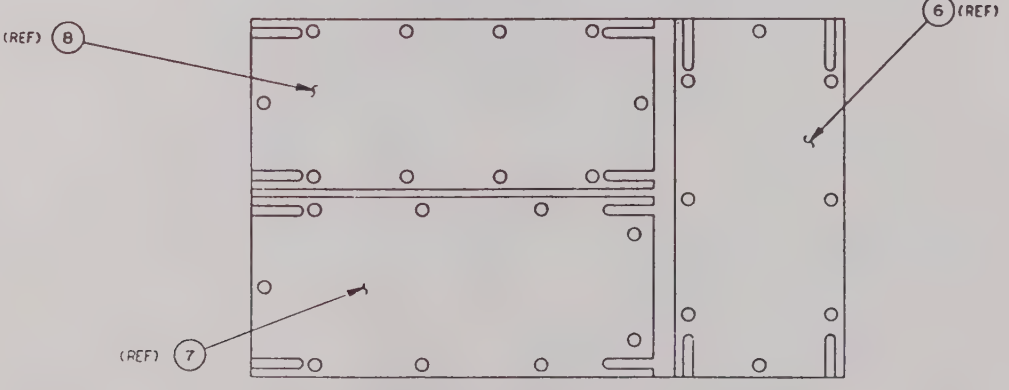

ASS'Y SHOWN WITH COVERS REMOVED FOR CLAPITY

LINE NO.	WIRE FROM
1	P47001-
2	
3	
4	
5	
6	
7	
8	
9	
10	
11	
12	
13	
14	
15	P47001-

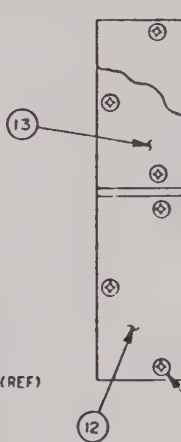

ASSEM

1.
2.
3.
4.
5.
6.
7.
8.
9

F G H J K L

DATE	REV	DESCRIPTION	APPD
2-26-92	A	DESIGN RELEASE	SL
7-14-92	A-1	INC REF L138	SL
10-28-92	A-2	INC REF L145	SL

RUNNING LIST				
	TO	COLOR	AWG	LG
	FL48018	BRN	26	11.5
	FL48017	BLU		7.0
	FL48016	ORN/WHT		11.0
	FL48007	YEL/WHT		4.5
	GL48003	BLK		7.5
	FL48001	GRN		7.0
	FL48003	RED		6.5
	FL48012	VIO		6.0
	FL48009	GRA		5.7
	FL48014	WHT		7.5
	FL48015	WHT/BRN		7.5
	FL48013	WHT/RED		8.0
		KEY		
	N/C			
	GL48002	BLK	26	4.5

WIRE RUNNING LIST (CONT)					
LINE NO.	FROM	TO	COLOR	AWG	LG
16	FL48002	FL48004	548001 220Ω 1/4W		
17	FL48003	FL48004	RED	26	2.5
18	FL48004	FL48009	RED		2.8
19	FL48008	FL48006	RED		2.5
20	FL48009	FL48011	GRA	26	1.9
21	J48005	J48012	C48002 10μF		
22	J48012	GL48003	C48003 .01μF		
23	J48005	GL48003	C48001 4.7μF		
24	FL48005	J48005	BUS	26	

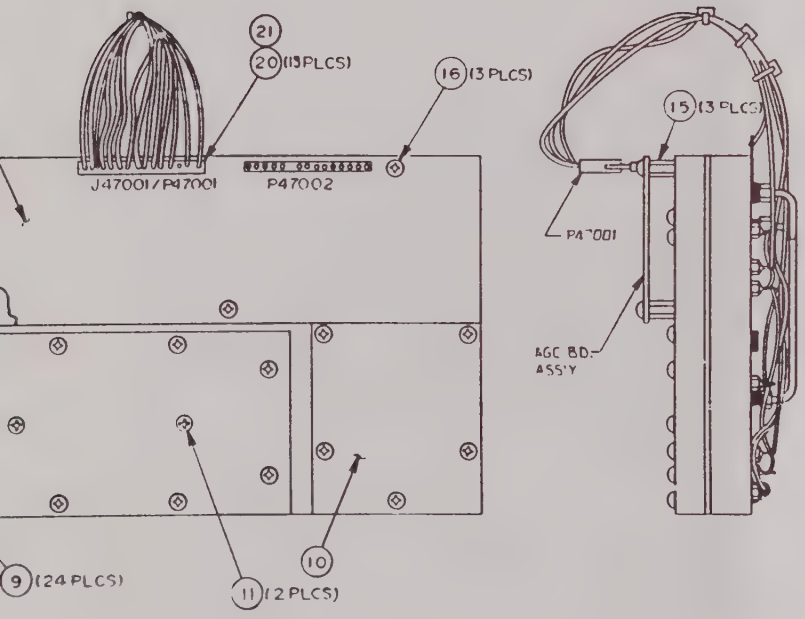

NOTES:

1. ALL REF Nº'S CARRY AN ASSIGNED DESIGNATOR SERIES. THIS DWG CARRIES SERIES 48XX (eg. FL1 IS FL48001)
2. REF SCHEMATIC INTERCONNECT 0000-9041-200.
3. LAST ITEM Nº USED: 25
4. ITEM Nº'S NOT USED: 5
5. LAST REF DES Nº USED: GL3, E4, R2, C2, J12, FL18
6. REF DES NOT USED: J3, J5, J6, J9, FL10, GL1

Y INSTRUCTIONS

TALL FEEDTHRU'S, RF CONNS, & COAX ASS'YS (ITEM ③ & ④) ON C-BORE SIDE OF
CORE BLOCK (ITEM ①).

ITION VCO CORE BLOCK WITH FEEDTHRU COMPONENTS FACE DOWN. ALIGN PC BD'S (ITEMS ⑥, ⑦ & ⑨)
TOP OF CORE BLOCK SO THAT FEEDTHRU COMPONENT LEADS CAN ENTER THE PC BD'S AT
PROPER POINTS AS SHOWN ON THIS DWG.

LAYOUT TEMPLATES TO POSITION & SECURE PC BD'S IN PROPER POSITION AS FOLLOWS:

0900-4955-200 TEMPLATE WITH ITEM ⑦
0900-4955-300 TEMPLATE WITH ITEM ⑥
0900-4955-700 TEMPLATE WITH ITEM ⑨

ERT SCREWS (ITEM ⑪) & TIGHTEN TO SPECS.

DER ALL FEEDTHRU COMPONENTS.

TALL COMPONENTS, FOUND ON SHEET 2, ONTO PC BD'S (NOT ALL COMPONENTS CAN BE INSTALLED
THIS TIME).

MOVE LAYOUT TEMPLATES & INSTALL REMAINING COMPONENTS ONTO PC BD'S.

MERSE AND BRUSH CLEAN IN UNCONTAMINATED SOLVENT. DO NOT USE VAPO-KLEEN MACHINE.

TALL COVERS (ITEMS ⑩, ⑫ + ⑬) & AND SECURE THEM IN PLACE WITH ITEM ⑪ (SCREWS).

EMBLE COMPLETED CORE BLOCK INTO VCO Nº 2 MECH ASS'Y

	-IFR INC-	
A. OSBURN 2-26-92	TITLE: MECH ASS'Y VCO Nº 2	
S. LEONARD 2-26-92		
P.R. HARRIS 2-26-92	D	7005-9041-200 A2
	SCALE: 1:1	SHEET 1 OF 2

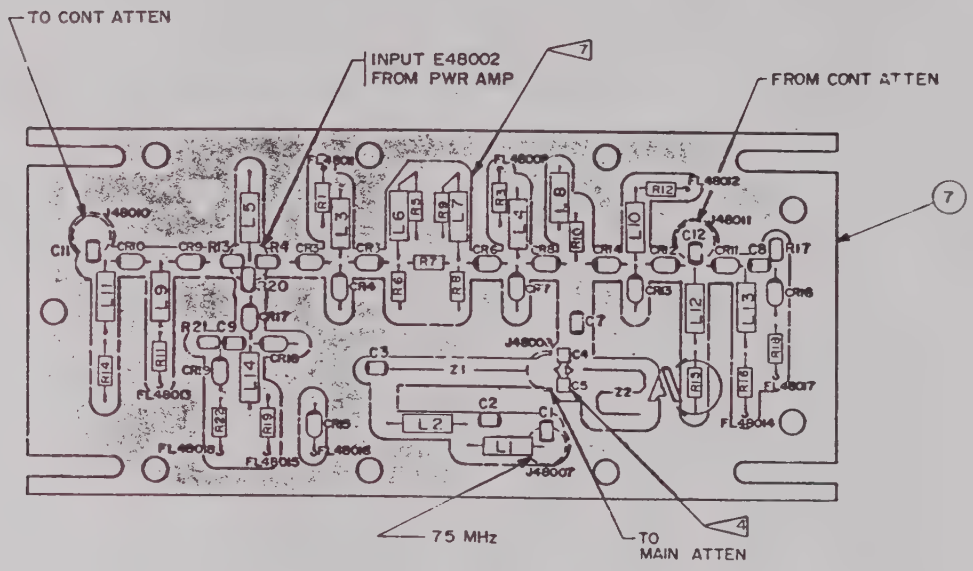

CONTOUR DIODE SW/DIPLEXER

REF DES SERIES 44XXX
REF SCHEMATIC 0000-9041-200

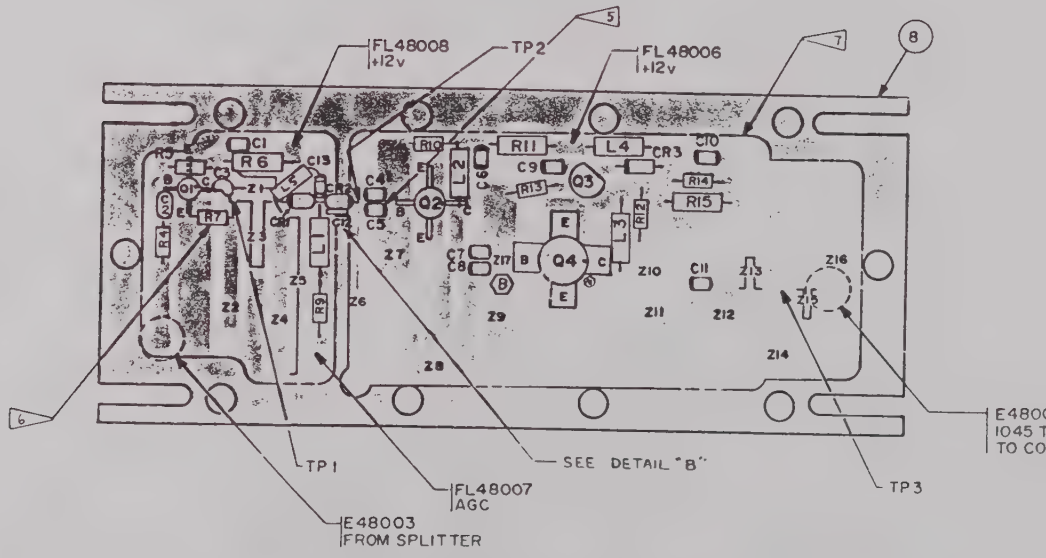

PWR AMP

REF DES SERIES 45XXX
REF SCHEMATIC 0000-9041-200

F G H J K L

SEE SHT 1 FOR REVISIONS

BEND LEADS ON ALL COMPONENTS W/FEET FOR SURFACE MTG

DETAIL A

TYP ALL COMPONENTS

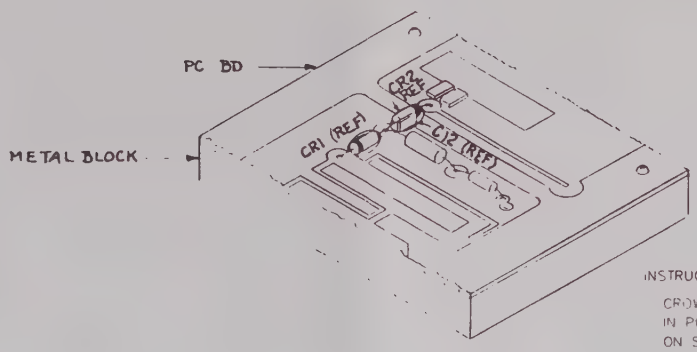

DETAIL "B"

NO SCALE

INSTRUCTIONS

CROWD CR2 TOWARD REAR OF HOLE IN PC BOARD. SET CHIP CAP, C12, ON SIDE AND SLIP INTO OPENING IN FRONT OF CR2. SOLDER C12 IN PLACE MAKING SURE IT DOES NOT TOUCH THE METAL BLOCK BELOW

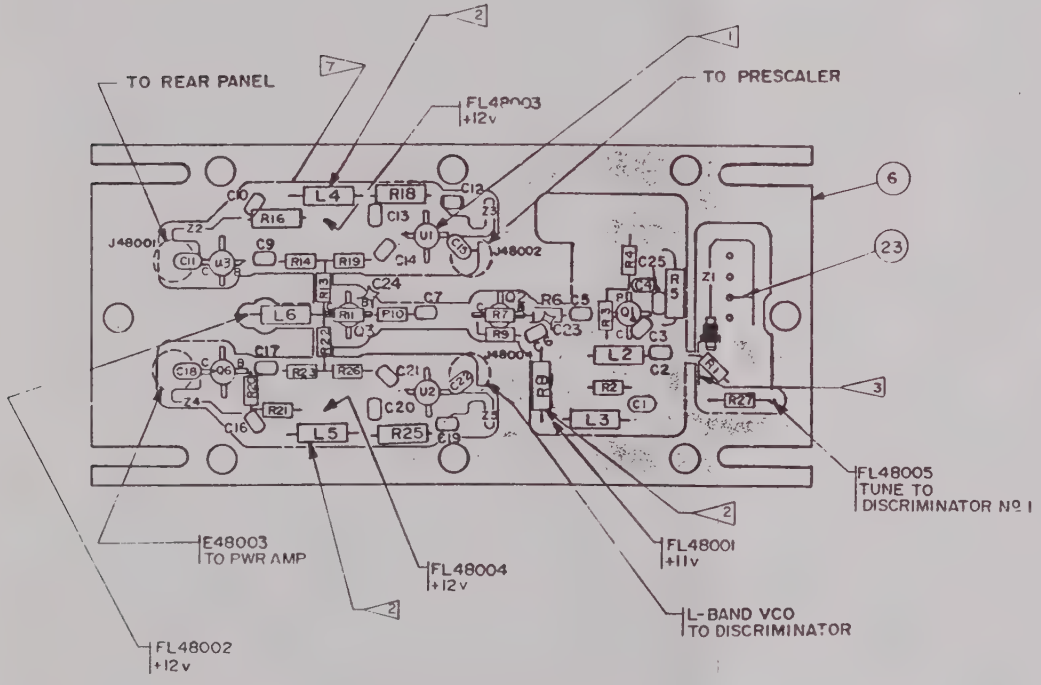

VCO / SPLITTER

REF DES SERIES 46XXX
REF SCHEMATIC 0000-9041-200

ASSEMBLY NOTES

1. NOTE POSITION OF SLANTED LEAD FOR U1 & U2
2. L4, L5 & R8 MUST BE INSTALLED AFTER FIXTURE (TEMPLATE) IS REMOVED.
3. LEAD OF R1 CAN BE POSITIONED BETWEEN BLOCK WALLS. BODY OF R1 MUST NOT GO PAST THIS LINE.
4. KEEP COMPONENT BODIES OF C4 & C5 AWAY FROM GROUND PLANE TO KEEP CHANNEL IN BLOCK FROM DAMAGING THEM.
5. CHIPS TO BE SOLDERED SIDE BY SIDE WITH EQUAL SPACING ON EITHER SIDE OF CIRCUIT.
6. R7 TO BE PLACED HORIZONTALLY WITH LEAD .1 FROM EDGE OF SLOT.
7. MECHANICAL LINE INDICATES WHERE CHANNEL IN BLOCK RUNS. KEEP PARTS AWAY FROM THE BLOCK WALLS TO AVOID DAMAGING THEM.

SEE SHT 1 FOR NOTES AND SPECIFICATIONS

0 MHz
R DIODE SW

	-IFR INC-	
DRAWN A.OSBURN 1-31-92	TITLE MECHANICAL ASS'Y VCO Nº 2	
CHECKED S.LEONARD 2-3-92		
APPROVED P.R.HARRIS 2-3-92	SIZE D / DWG NO 7005-9041-200	A2
	SCALE 2:1 / CAGE 91190	SHEET 2 OF 2

BILL OF MATERIAL LISTED BY REFERENCE DESIGNATOR
AS OF ALL DATES

ASSEMBLY PART NO.: 7005-9041-200
DESCRIPTION: MECH ASSY, VCO
ITEM MASTER REV: A2 ECO NO: #L145
REV OF THIS BOM: DATE OF LAST ECO: 11/04/92

STATUS	REFERENCE DESIGNATOR	QUANTITY PER ASSY	PART NUMBER	DESCRIPTION	EFFEC
ACTIVE		4.00	2850-0000-106	SCREW,.875L6-32.25HH,6-32X.250	00/0(
ACTIVE		.92	6003-0000-001	WIRE,HOOK,TFE,26GA, 7S,BLACK	00/0(
ACTIVE		.92	6003-0000-002	WIRE,HOOK,TFE,26GA, 7S,BROWN	00/0(
ACTIVE		1.04	6003-0000-003	WIRE,HOOK,TFE,26GA, 7S,RED	00/0(
ACTIVE		.62	6003-0000-006	WIRE,HOOK,TFE,26GA, 7S,GREEN	00/0(
ACTIVE		.62	6003-0000-007	WIRE,HOOK,TFE,26GA, 7S,BLUE	00/0(
ACTIVE		.50	6003-0000-008	WIRE,HOOK,TFE,26GA, 7S,VIOLET	00/0(
ACTIVE		.62	6003-0000-009	WIRE,HOOK,TFE,26GA, 7S,GRAY	00/0(
ACTIVE		.62	6003-0000-010	WIRE,HOOK,TFE,26GA, 7S,WHITE	00/0(
ACTIVE		.58	6003-0000-012	WIRE,HOOK,TFE,26GA, 7S,WHT/BRN	00/0(
ACTIVE		.70	6003-0000-013	WIRE,HOOK,TFE,26GA, 7S,WHT/RED	00/0(
ACTIVE		.90	6003-0000-014	WIRE,HOOK,TFE,26GA, 7S,WHT/ORG	00/0(
ACTIVE		.45	6003-0000-015	WIRE,HOOK,TFE,26GA, 7S,WHT/YEL	00/0(
ACTIVE	*01	1.00	2100-4954-800	BLOCK,VCO BASE	00/0(
ACTIVE	*02	14.00	2840-7600-208	WASHER,ALUM,.380D,.250ID,.020T	00/0(
ACTIVE	*03	1.00	6042-4986-100	COAX ASSY .086 SR SPLTR TO AMP	00/0(
ACTIVE	*04	1.00	6042-4986-200	COAX ASSY.086 SR AMP DIODE SW	00/0(
ACTIVE	*05	20.00	0002-0000-000	*** REF DESIG NOT USED ***	00/0(
ACTIVE	*06	1.00	1700-4922-400	PC BD,VCO/SPLITTER	00/0(
ACTIVE	*07	1.00	1700-4922-600	PC BD,CTR DIODE SW/DIPLEXER	00/0(
ACTIVE	*08	1.00	1700-4922-500	PC BD,PWR AMP	00/0(
ACTIVE	*09	26.00	2804-0625-006	SCREW,6-32 X 5/8 PPHM	00/0(

LI,283,2.MDATAB01 IFR SYSTEMS, INC.
MON, JAN 4, 1993, 12:46 PM

BILL OF MATERIAL LISTED BY REFERENCE DESIGNATOR
AS OF ALL DATES

ASSEMBLY PART NO.: 7005-9041-200
DESCRIPTION: MECH ASSY, VCO
ITEM MASTER REV: A2 ECO NO: #L145
REV OF THIS BOM: DATE OF LAST ECO: 11/04/92

STATUS	REFERENCE DESIGNATOR	QUANTITY PER ASSY	PART NUMBER	DESCRIPTION	EFFEC
ACTIVE	*10	1.00	1414-4955-000	COVER,VCO/SPLITTER	00/00
ACTIVE	*11	2.00	2803-0625-006	SCREW,4-40 X 5/8 PPHM	00/00
ACTIVE	*12	1.00	1414-4954-900	COVER,CONTOUR DIODE SWITCH	00/00
ACTIVE	*13	1.00	1414-4955-100	COVER,POWER AMP	00/00
ACTIVE	*14	1.00	7010-4933-200	PCB ASSY, AGC	00/00
ACTIVE	*15	3.00	2850-3851-600	SCREW,.300L4-40.19HH,6-32X.700	00/00
ACTIVE	*16	3.00	2803-0250-006	SCREW,4-40 X 1/4 PPHM	00/00
ACTIVE	*17	1.00	2109-0000-007	CLAMP CABLE TYRAP TY34M.8	00/00
ACTIVE	*18	1.00	2804-0313-006	SCREW 6-32X5/16 PHIL BIND HD	00/00
ACTIVE	*19	1.00	2840-0000-006	WASHER,FLAT,ID.160OD.306TK.039	00/00
ACTIVE	*20	13.00	2114-0000-022	CONTACT,DCANT,CRIMP,22-30,TIN	00/00
ACTIVE	*21	1.00	2127-9900-100	KEY,POLARIZIN,MOLEX 15-04-9209	00/00
ACTIVE	*22	6.00	6004-6005-400	TY-RAP,4.0 LG	00/00
ACTIVE	*23	.00	1050-0000-075	WIRE,BUS,TINNED COPPER,26GA	00/00
ACTIVE	*24	2.00	2804-0188-006	SCREW 6-32X3/16 PHIL BIND HD	00/00
ACTIVE	*25	1.00	1400-9051-800	BRACKET,FM/TUNE	00/00
ACTIVE	*26	.13	6011-0018-001	TUBING,TF,26 AWG,NATURAL,TW	00/00
ACTIVE	*SCHEM	.00	DWG-0000-9041-200	INTERCONNECT, MECH VCO RD301A	00/00
ACTIVE	C44001	12.00	1620-2200-500	CAP, PF 22, 100V, CHIP NPO *	00/00
ACTIVE	C44002	-.--	1620-2200-500	CAP, PF 22, 100V, CHIP NPO *	00/00
ACTIVE	C44003	-.--	1620-2200-500	CAP, PF 22, 100V, CHIP NPO *	00/00
ACTIVE	C44004	4.00	1506-0030-017	CAP,PF 3.3, 100V,MICA, 17	00/00

LI,283,2.MDATAB01 IFR SYSTEMS, INC.
MON, JAN 4, 1993, 12:46 PM

BILL OF MATERIAL LISTED BY REFERENCE DESIGNATOR
AS OF ALL DATES

ASSEMBLY PART NO.: 7005-9041-200
DESCRIPTION: MECH ASSY, VCO
ITEM MASTER REV: A2 ECO NO: #L145
REV OF THIS BOM: DATE OF LAST ECO: 11/04/92

STATUS	REFERENCE DESIGNATOR	QUANTITY PER ASSY	PART NUMBER	DESCRIPTION	EFFEC
ACTIVE	C44005	-.--	1506-0030-017	CAP,PF 3.3, 100V,MICA, 17	00/00
ACTIVE	C44006	-.--	0002-0000-000	*** REF DESIG NOT USED ***	00/00
ACTIVE	C44007	-.--	1620-2200-500	CAP, PF 22, 100V, CHIP NPO *	00/00
ACTIVE	C44008	-.--	1620-2200-500	CAP, PF 22, 100V, CHIP NPO *	00/00
ACTIVE	C44009	-.--	1620-2200-500	CAP, PF 22, 100V, CHIP NPO *	00/00
ACTIVE	C44010	-.--	0002-0000-000	*** REF DESIG NOT USED ***	00/00
ACTIVE	C44011	-.--	1620-2200-500	CAP, PF 22, 100V, CHIP NPO *	00/00
ACTIVE	C44012	-.--	1620-2200-500	CAP, PF 22, 100V, CHIP NPO *	00/00
ACTIVE	C45001	12.00	1620-2210-600	CAP, PF 220, 100V, CHIP NPO *	00/00
ACTIVE	C45002	1.00	1523-0000-005	CAP,PF 10, 50V,CHIP,NPO	00/00
ACTIVE	C45003	-.--	1506-0030-017	CAP,PF 3.3, 100V,MICA, 17	00/00
ACTIVE	C45004	6.00	1620-2090-510	CAP,PF 2.0, 200V,CHIP,NPO	00/00
ACTIVE	C45005	-.--	1620-2090-510	CAP,PF 2.0, 200V,CHIP,NPO	00/00
ACTIVE	C45006	-.--	1620-2210-600	CAP, PF 220, 100V, CHIP NPO *	00/00
ACTIVE	C45007	-.--	1620-2090-510	CAP,PF 2.0, 200V,CHIP,NPO	00/00
ACTIVE	C45008	-.--	1620-2090-510	CAP,PF 2.0, 200V,CHIP,NPO	00/00
ACTIVE	C45009	-.--	1620-2210-600	CAP, PF 220, 100V, CHIP NPO *	00/00
ACTIVE	C45010	3.00	1523-0000-002	CAP,PF 1800, 50V,CHIP,X7R	00/00
ACTIVE	C45011	-.--	1620-2200-500	CAP, PF 22, 100V, CHIP NPO *	00/00
ACTIVE	C45012	-.--	1620-2090-510	CAP,PF 2.0, 200V,CHIP,NPO	00/00
ACTIVE	C45013	2.00	1622-0030-001	CAP, PF 3.0, 50V CHIP *	00/00
ACTIVE	C46001	1.00	1506-0101-017	CAP,pF 100, 100V NPO 5 *	00/00

LI,283,2.MDATAB01 IFR SYSTEMS, INC.
MON, JAN 4, 1993, 12:46 PM

BILL OF MATERIAL LISTED BY REFERENCE DESIGNATOR
AS OF ALL DATES

ASSEMBLY PART NO.: 7005-9041-200
DESCRIPTION: MECH ASSY, VCO
ITEM MASTER REV: A2 ECO NO: #L145
REV OF THIS BOM: DATE OF LAST ECO: 11/04/92

STATUS	REFERENCE DESIGNATOR	QUANTITY PER ASSY	PART NUMBER	DESCRIPTION	EFFEC
ACTIVE	C46024	-.--	1506-0020-017	CAP,PF 2.2,100V,NPO,25	00/00
ACTIVE	C46025	-.--	1620-2090-510	CAP,PF 2.0, 200V,CHIP,NPO	00/00
ACTIVE	C48001	1.00	1580-4792-305	CAPACITOR 4.7 uF,35V *	00/00
ACTIVE	C48002	1.00	1580-1000-200	CAP,UF, 10, 25V,ELE RDL	00/00
ACTIVE	CR44001	-.--	0002-0000-000	*** REF DESIG NOT USED ***	00/00
ACTIVE	CR44002	-.--	0002-0000-000	*** REF DESIG NOT USED ***	00/00
ACTIVE	CR44003	14.00	4828-0000-002	DIODE,PIN,.3 PF,100 NS	00/00
ACTIVE	CR44004	-.--	4828-0000-002	DIODE,PIN,.3 PF,100 NS	00/00
ACTIVE	CR44005	-.--	4828-0000-002	DIODE,PIN,.3 PF,100 NS	00/00
ACTIVE	CR44006	-.--	4828-0000-002	DIODE,PIN,.3 PF,100 NS	00/00
ACTIVE	CR44007	-.--	4828-0000-002	DIODE,PIN,.3 PF,100 NS	00/00
ACTIVE	CR44008	-.--	4828-0000-002	DIODE,PIN,.3 PF,100 NS	00/00
ACTIVE	CR44009	-.--	4828-0000-002	DIODE,PIN,.3 PF,100 NS	00/00
ACTIVE	CR44010	-.--	4828-0000-002	DIODE,PIN,.3 PF,100 NS	00/00
ACTIVE	CR44011	-.--	4828-0000-002	DIODE,PIN,.3 PF,100 NS	00/00
ACTIVE	CR44012	-.--	4828-0000-002	DIODE,PIN,.3 PF,100 NS	00/00
ACTIVE	CR44013	-.--	4828-0000-002	DIODE,PIN,.3 PF,100 NS	00/00
ACTIVE	CR44014	-.--	4828-0000-002	DIODE,PIN,.3 PF,100 NS	00/00
ACTIVE	CR44015	3.00	4915-0500-100	DIODE,MA-4E282,S BAR 30VBR	00/00
ACTIVE	CR44016	-.--	4915-0500-100	DIODE,MA-4E282,S BAR 30VBR	00/00
ACTIVE	CR44017	-.--	4828-0000-002	DIODE,PIN,.3 PF,100 NS	00/00
ACTIVE	CR44018	-.--	4828-0000-002	DIODE,PIN,.3 PF,100 NS	00/00

LI,283,2.MDATAB01 IFR SYSTEMS, INC.
MON, JAN 4, 1993, 12:46 PM

BILL OF MATERIAL LISTED BY REFERENCE DESIGNATOR
AS OF ALL DATES

ASSEMBLY PART NO.: 7005-9041-200
DESCRIPTION: MECH ASSY, VCO
ITEM MASTER REV: A2 ECO NO: #L145
REV OF THIS BOM: DATE OF LAST ECO: 11/04/92

STATUS	REFERENCE DESIGNATOR	QUANTITY PER ASSY	PART NUMBER	DESCRIPTION	EFFEC
ACTIVE	C46002	-.--	1620-2200-500	CAP, PF 22, 100V, CHIP NPO *	00/00
ACTIVE	C46003	2.00	1620-1090-511	CAP,PF 1.0, 50V,CHIP	00/00
ACTIVE	C46004	-.--	1620-2200-500	CAP, PF 22, 100V, CHIP NPO *	00/00
ACTIVE	C46005	-.--	1620-1090-511	CAP,PF 1.0, 50V,CHIP	00/00
ACTIVE	C46006	-.--	1620-2210-600	CAP, PF 220, 100V, CHIP NPO *	00/00
ACTIVE	C46007	-.--	1620-2200-500	CAP, PF 22, 100V, CHIP NPO *	00/00
ACTIVE	C46008	-.--	0002-0000-000	*** REF DESIG NOT USED ***	00/00
ACTIVE	C46009	-.--	1620-2210-600	CAP, PF 220, 100V, CHIP NPO *	00/00
ACTIVE	C46010	-.--	1620-2210-600	CAP, PF 220, 100V, CHIP NPO *	00/00
ACTIVE	C46011	-.--	1622-0030-001	CAP, PF 3.0, 50V CHIP *	00/00
ACTIVE	C46012	-.--	1620-2210-600	CAP, PF 220, 100V, CHIP NPO *	00/00
ACTIVE	C46013	-.--	1523-0000-002	CAP,PF 1800, 50V,CHIP,X7R	00/00
ACTIVE	C46014	-.--	1620-2210-600	CAP, PF 220, 100V, CHIP NPO *	00/00
ACTIVE	C46015	2.00	1506-0220-017	CAP,PF 22, 100V,NPO, 5	00/00
ACTIVE	C46016	-.--	1620-2210-600	CAP, PF 220, 100V, CHIP NPO *	00/00
ACTIVE	C46017	-.--	1620-2210-600	CAP, PF 220, 100V, CHIP NPO *	00/00
ACTIVE	C46018	-.--	1506-0030-017	CAP,PF 3.3, 100V,MICA, 17	00/00
ACTIVE	C46019	-.--	1620-2210-600	CAP, PF 220, 100V, CHIP NPO *	00/00
ACTIVE	C46020	-.--	1523-0000-002	CAP,PF 1800, 50V,CHIP,X7R	00/00
ACTIVE	C46021	-.--	1620-2210-600	CAP, PF 220, 100V, CHIP NPO *	00/00
ACTIVE	C46022	-.--	1506-0220-017	CAP,PF 22, 100V,NPO, 5	00/00
ACTIVE	C46023	2.00	1506-0020-017	CAP,PF 2.2,100V,NPO,25	00/00

LI,283,2.MDATAB01 IFR SYSTEMS, INC.
MON, JAN 4, 1993, 12:46 PM

BILL OF MATERIAL LISTED BY REFERENCE DESIGNATOR
AS OF ALL DATES

ASSEMBLY PART NO.: 7005-9041-200
DESCRIPTION: MECH ASSY, VCO
ITEM MASTER REV: A2 ECO NO: #L145
REV OF THIS BOM: DATE OF LAST ECO: 11/04/92

STATUS	REFERENCE DESIGNATOR	QUANTITY PER ASSY	PART NUMBER	DESCRIPTION	EFFEC
ACTIVE	CR44019	-.--	4915-0500-100	DIODE,MA-4E282,S BAR 30VBR	00/0(
ACTIVE	CR45001	2.00	4825-0000-002	DIODE,PS083B ,PIN,.10PF, 3NS	00/0(
ACTIVE	CR45002	-.--	4825-0000-002	DIODE,PS083B ,PIN,.10PF, 3NS	00/0(
ACTIVE	CR45003	1.00	4815-0000-003	DIODE, 1N4148 ,SIGNAL, 75PRV	00/0(
ACTIVE	CR46001	1.00	4829-0000-001	DIODE,MA-45102 ,VARC,1.2PF/-4V	00/0(
ACTIVE	FL48001	13.00	5801-0000-006	FILTER,EMI/RFI 1500pF 8-32DIA*	00/0(
ACTIVE	FL48002	-.--	5801-0000-006	FILTER,EMI/RFI 1500pF 8-32DIA*	00/0(
ACTIVE	FL48003	-.--	5801-0000-006	FILTER,EMI/RFI 1500pF 8-32DIA*	00/0(
ACTIVE	FL48004	-.--	5801-0000-006	FILTER,EMI/RFI 1500pF 8-32DIA*	00/0(
ACTIVE	FL48005	-.--	5801-0000-006	FILTER,EMI/RFI 1500pF 8-32DIA*	00/0(
ACTIVE	FL48006	-.--	5801-0000-006	FILTER,EMI/RFI 1500pF 8-32DIA*	00/0(
ACTIVE	FL48007	-.--	5801-0000-006	FILTER,EMI/RFI 1500pF 8-32DIA*	00/0(
ACTIVE	FL48008	-.--	5801-0000-006	FILTER,EMI/RFI 1500pF 8-32DIA*	00/0(
ACTIVE	FL48009	4.00	1526-0000-006	CAP,PF 100, 200V,FEEDTHRU	00/0(
ACTIVE	FL48011	-.--	1526-0000-006	CAP,PF 100, 200V,FEEDTHRU	00/0(
ACTIVE	FL48012	-.--	1526-0000-006	CAP,PF 100, 200V,FEEDTHRU	00/0(
ACTIVE	FL48013	-.--	1526-0000-006	CAP,PF 100, 200V,FEEDTHRU	00/0(
ACTIVE	FL48014	-.--	5801-0000-006	FILTER,EMI/RFI 1500pF 8-32DIA*	00/0(
ACTIVE	FL48015	-.--	5801-0000-006	FILTER,EMI/RFI 1500pF 8-32DIA*	00/0(
ACTIVE	FL48016	-.--	5801-0000-006	FILTER,EMI/RFI 1500pF 8-32DIA*	00/0(
ACTIVE	FL48017	-.--	5801-0000-006	FILTER,EMI/RFI 1500pF 8-32DIA*	00/0(
ACTIVE	FL48018	-.--	5801-0000-006	FILTER,EMI/RFI 1500pF 8-32DIA*	00/0(

LI,283,2.MDATAB01 IFR SYSTEMS, INC.
MON, JAN 4, 1993, 12:46 PM

BILL OF MATERIAL LISTED BY REFERENCE DESIGNATOR
AS OF ALL DATES

ASSEMBLY PART NO.: 7005-9041-200
DESCRIPTION: MECH ASSY, VCO
ITEM MASTER REV: A2 ECO NO: #L145
REV OF THIS BOM: DATE OF LAST ECO: 11/04/92

STATUS	REFERENCE DESIGNATOR	QUANTITY PER ASSY	PART NUMBER	DESCRIPTION	EFFEC
ACTIVE	GL48002	1.00	2850-0000-041	LUG,GND,8	00/0(
ACTIVE	GL48003	1.00	2850-0000-010	LUG,GND,10	00/0(
ACTIVE	J48001	7.00	2123-0000-030	CONN,FSMA,W/TERM,STR BULKHEAD*	00/0(
ACTIVE	J48002	-.--	2123-0000-030	CONN,FSMA,W/TERM,STR BULKHEAD*	00/0(
ACTIVE	J48003	-.--	0002-0000-000	*** REF DESIG NOT USED ***	00/0(
ACTIVE	J48004	-.--	2123-0000-030	CONN,FSMA,W/TERM,STR BULKHEAD*	00/0(
ACTIVE	J48005	-.--	0002-0000-000	*** REF DESIG NOT USED ***	00/0(
ACTIVE	J48005	2.00	2123-0000-038	CONN,M SMB,W/TERM,STR BULKHD *	00/0(
ACTIVE	J48006	-.--	0002-0000-000	*** REF DESIG NOT USED ***	00/0(
ACTIVE	J48007	-.--	2123-0000-030	CONN,FSMA,W/TERM,STR BULKHEAD*	00/0(
ACTIVE	J48008	-.--	2123-0000-030	CONN,FSMA,W/TERM,STR BULKHEAD*	00/0(
ACTIVE	J48009	-.--	0002-0000-000	*** REF DESIG NOT USED ***	00/0(
ACTIVE	J48010	-.--	2123-0000-030	CONN,FSMA,W/TERM,STR BULKHEAD*	00/0(
ACTIVE	J48011	-.--	2123-0000-030	CONN,FSMA,W/TERM,STR BULKHEAD*	00/0(
ACTIVE	J48012	-.--	2123-0000-038	CONN,M SMB,W/TERM,STR BULKHD *	00/0(
ACTIVE	L44001	23.00	1806-0108-002	IND, .1 UH,.13OHM,0819-00	00/0(
ACTIVE	L44002	-.--	1806-0108-002	IND, .1 UH,.13OHM,0819-00	00/0(
ACTIVE	L44003	-.--	1806-0108-002	IND, .1 UH,.13OHM,0819-00	00/0(
ACTIVE	L44004	-.--	1806-0108-002	IND, .1 UH,.13OHM,0819-00	00/0(
ACTIVE	L44005	-.--	1806-0108-002	IND, .1 UH,.13OHM,0819-00	00/0(
ACTIVE	L44006	-.--	1806-0108-002	IND, .1 UH,.13OHM,0819-00	00/0(
ACTIVE	L44007	-.--	1806-0108-002	IND, .1 UH,.13OHM,0819-00	00/0(

LI,283,2.MDATAB01 IFR SYSTEMS, INC.
MON, JAN 4, 1993, 12:46 PM

BILL OF MATERIAL LISTED BY REFERENCE DESIGNATOR
AS OF ALL DATES

ASSEMBLY PART NO.: 7005-9041-200
DESCRIPTION: MECH ASSY, VCO
ITEM MASTER REV: A2 ECO NO: #L145
REV OF THIS BOM: DATE OF LAST ECO: 11/04/92

STATUS	REFERENCE DESIGNATOR	QUANTITY PER ASSY	PART NUMBER	DESCRIPTION	EFFEC
ACTIVE	L44008	-.--	1806-0108-002	IND, .1 UH,.130HM,0819-00	00/00
ACTIVE	L44009	-.--	1806-0108-002	IND, .1 UH,.130HM,0819-00	00/00
ACTIVE	L44010	-.--	1806-0108-002	IND, .1 UH,.130HM,0819-00	00/00
ACTIVE	L44011	-.--	1806-0108-002	IND, .1 UH,.130HM,0819-00	00/00
ACTIVE	L44012	-.--	1806-0108-002	IND, .1 UH,.130HM,0819-00	00/00
ACTIVE	L44013	-.--	1806-0108-002	IND, .1 UH,.130HM,0819-00	00/00
ACTIVE	L44014	-.--	1806-0108-002	IND, .1 UH,.130HM,0819-00	00/00
ACTIVE	L45001	-.--	1806-0108-002	IND, .1 UH,.130HM,0819-00	00/00
ACTIVE	L45002	-.--	1806-0108-002	IND, .1 UH,.130HM,0819-00	00/00
ACTIVE	L45003	-.--	1806-0108-002	IND, .1 UH,.130HM,0819-00	00/00
ACTIVE	L45004	-.--	1806-0108-002	IND, .1 UH,.130HM,0819-00	00/00
ACTIVE	L45005	1.00	1801-0000-007	IND, .068 UH, .060 OHM	00/00
ACTIVE	L46002	-.--	1806-0108-002	IND, .1 UH,.130HM,0819-00	00/00
ACTIVE	L46003	-.--	1806-0108-002	IND, .1 UH,.130HM,0819-00	00/00
ACTIVE	L46004	-.--	1806-0108-002	IND, .1 UH,.130HM,0819-00	00/00
ACTIVE	L46005	-.--	1806-0108-002	IND, .1 UH,.130HM,0819-00	00/00
ACTIVE	L46006	-.--	1806-0108-002	IND, .1 UH,.130HM,0819-00	00/00
ACTIVE	P47001	1.00	2115-0000-014	CONN PLASTIC MOLEX 22-01-2151	00/00
ACTIVE	Q44004	-.--	0002-0000-000	*** REF DESIG NOT USED ***	00/00
ACTIVE	Q45001	4.00	5010-0203-100	TRANS,HXTR NPN HF AMP *	00/00
ACTIVE	Q45002	2.00	4803-0000-004	TRANS,NPN,LP/VHF AMP	00/00
ACTIVE	Q45003	1.00	4807-0000-002	TRANS, 2N3905 ,PNP HS SW	00/00

LI,283,2.MDATAB01 IFR SYSTEMS, INC.
MON, JAN 4, 1993, 12:46 PM

BILL OF MATERIAL LISTED BY REFERENCE DESIGNATOR
AS OF ALL DATES

ASSEMBLY PART NO.: 7005-9041-200
DESCRIPTION: MECH ASSY, VCO
ITEM MASTER REV: A2 ECO NO: #L145
REV OF THIS BOM: DATE OF LAST ECO: 11/04/92

STATUS	REFERENCE DESIGNATOR	QUANTITY PER ASSY	PART NUMBER	DESCRIPTION	EFFEC
ACTIVE	Q45004	1.00	5010-0503-000	TRANS,MRF1000MB,NPN PWR HF AMP	00/00
ACTIVE	Q46001	-.--	4803-0000-004	TRANS,NPN,LP/VHF AMP	00/00
ACTIVE	Q46002	-.--	5010-0203-100	TRANS,HXTR NPN HF AMP *	00/00
ACTIVE	Q46003	-.--	5010-0203-100	TRANS,HXTR NPN HF AMP *	00/00
ACTIVE	Q46006	-.--	5010-0203-100	TRANS,HXTR NPN HF AMP *	00/00
ACTIVE	R44001	7.00	4701-0101-003	RES, 5, 1/8W, 100 OHM *	00/00
ACTIVE	R44002	-.--	0002-0000-000	*** REF DESIG NOT USED ***	00/00
ACTIVE	R44003	-.--	4701-0101-003	RES, 5, 1/8W, 100 OHM *	00/00
ACTIVE	R44004	5.00	4722-5119-001	RES, 1% 1/8W 51.1 OHM *	00/00
ACTIVE	R44005	2.00	4701-0560-003	RES, 5, 1/8W, 56 OHM	00/00
ACTIVE	R44006	4.00	4701-0471-003	RES, 5, 1/8W, 470 OHM	00/00
ACTIVE	R44007	1.00	4701-0569-002	RES, 5, 1/8W, 5.6 OHM,	00/00
ACTIVE	R44008	-.--	4701-0471-003	RES, 5, 1/8W, 470 OHM	00/00
ACTIVE	R44009	-.--	4701-0560-003	RES, 5, 1/8W, 56 OHM	00/00
ACTIVE	R44010	9.00	4701-0470-003	RES, 5, 1/8W, 47 OHM	00/00
ACTIVE	R44011	-.--	4701-0101-003	RES, 5, 1/8W, 100 OHM *	00/00
ACTIVE	R44012	-.--	4701-0101-003	RES, 5, 1/8W, 100 OHM *	00/00
ACTIVE	R44013	-.--	4722-5119-001	RES, 1% 1/8W 51.1 OHM *	00/00
ACTIVE	R44014	-.--	4701-0470-003	RES, 5, 1/8W, 47 OHM	00/00
ACTIVE	R44015	-.--	4701-0470-003	RES, 5, 1/8W, 47 OHM	00/00
ACTIVE	R44016	2.00	4701-0221-003	RES, 5, 1/8W, 220 OHM	00/00
ACTIVE	R44017	-.--	4722-5119-001	RES, 1% 1/8W 51.1 OHM *	00/00

BILL OF MATERIAL LISTED BY REFERENCE DESIGNATOR
AS OF ALL DATES

ASSEMBLY PART NO.: 7005-9041-200
DESCRIPTION: MECH ASSY, VCO
ITEM MASTER REV: A2 ECO NO: #L145
REV OF THIS BOM: DATE OF LAST ECO: 11/04/92

STATUS	REFERENCE DESIGNATOR	QUANTITY PER ASSY	PART NUMBER	DESCRIPTION	EFFEC
ACTIVE	R44018	4.00	4701-0820-003	RES, 5, 1/8W, 82 OHM *	00/00
ACTIVE	R44019	-.--	4701-0221-003	RES, 5, 1/8W, 220 OHM	00/00
ACTIVE	R44020	-.--	4722-5119-001	RES, 1% 1/8W 51.1 OHM *	00/00
ACTIVE	R44021	-.--	4722-5119-001	RES, 1% 1/8W 51.1 OHM *	00/00
ACTIVE	R44022	-.--	4701-0820-003	RES, 5, 1/8W, 82 OHM *	00/00
ACTIVE	R45001	-.--	0002-0000-000	*** REF DESIG NOT USED ***	00/00
ACTIVE	R45002	-.--	0002-0000-000	*** REF DESIG NOT USED ***	00/00
ACTIVE	R45003	-.--	0002-0000-000	*** REF DESIG NOT USED ***	00/00
ACTIVE	R45004	2.00	4701-0330-003	RES, 5, 1/8W, 33 OHM	00/00
ACTIVE	R45005	1.00	4701-0333-003	RES, 5, 1/8W, 33K OHM	00/00
ACTIVE	R45006	1.00	4702-0391-003	RES,5, 1/4W 390 OHM *	00/00
ACTIVE	R45007	-.--	4701-0101-003	RES, 5, 1/8W, 100 OHM *	00/00
ACTIVE	R45008	-.--	0002-0000-000	*** REF DESIG NOT USED ***	00/00
ACTIVE	R45009	-.--	4701-0101-003	RES, 5, 1/8W, 100 OHM *	00/00
ACTIVE	R45010	1.00	4701-0183-003	RES,5,1/8W, 18K OHM *	00/00
ACTIVE	R45011	3.00	4702-0221-003	RES, 5, 1/4W 220 OHM *	00/00
ACTIVE	R45012	1.00	4701-0682-003	RES, 5, 1/8W, 6.8K OHM *	00/00
ACTIVE	R45013	1 00	4701-0152-003	RES, 5, 1/8W, 1.5K OHM *	00/00
ACTIVE	R45014	1.00	4701-0331-003	RES, 5, 1/8W, 330 OHM	00/00
ACTIVE	R45015	1.00	4702-0479-003	RES, 5, 1/4W, 4.7 OHM	00/00
ACTIVE	R46001	-.--	4701-0471-003	RES, 5, 1/8W, 470 OHM	00/00
ACTIVE	R46002	-.--	4701-0470-003	RES, 5, 1/8W, 47 OHM	00/00

LI,283,2.MDATAB01 IFR SYSTEMS, INC.
MON, JAN 4, 1993, 12:46 PM

BILL OF MATERIAL LISTED BY REFERENCE DESIGNATOR
AS OF ALL DATES

ASSEMBLY PART NO.: 7005-9041-200
DESCRIPTION: MECH ASSY, VCO
ITEM MASTER REV: A2 ECO NO: #L145
REV OF THIS BOM: DATE OF LAST ECO: 11/04/92

STATUS	REFERENCE DESIGNATOR	QUANTITY PER ASSY	PART NUMBER	DESCRIPTION	EFFEC
ACTIVE	R46003	2.00	4701-0272-003	RES, 5, 1/8W, 2.7K OHM	00/00
ACTIVE	R46004	-.--	4701-0272-003	RES, 5, 1/8W, 2.7K OHM	00/00
ACTIVE	R46005	1.00	4702-0331-003	RES, 5%, 1/4W 330 OHM *	00/00
ACTIVE	R46006	-.--	4701-0820-003	RES, 5, 1/8W, 82 OHM *	00/00
ACTIVE	R46007	1.00	4701-0223-003	RES, 5, 1/8W, 22K OHM	00/00
ACTIVE	R46008	1.00	4706-1000-001	RES, 1, 1/4W 100 OHM *	00/00
ACTIVE	R46009	1.00	4701-0391-003	RES, 5, 1/8W, 390 OHM	00/00
ACTIVE	R46010	-.--	4701-0330-003	RES, 5, 1/8W, 33 OHM	00/00
ACTIVE	R46011	1.00	4701-0153-003	RES, 5, 1/8W, 15K OHM	00/00
ACTIVE	R46012	-.--	0002-0000-000	*** REF DESIG NOT USED ***	00/00
ACTIVE	R46013	-.--	4701-0470-003	RES, 5, 1/8W, 47 OHM	00/00
ACTIVE	R46014	-.--	4701-0470-003	RES, 5, 1/8W, 47 OHM	00/00
ACTIVE	R46015	-.--	0002-0000-000	*** REF DESIG NOT USED ***	00/00
ACTIVE	R46016	-.--	4702-0221-003	RES, 5, 1/4W 220 OHM *	00/00
ACTIVE	R46017	-.--	0002-0000-000	*** REF DESIG NOT USED ***	00/00
ACTIVE	R46018	2.00	4702-0181-003	RES, 5, 1/4W, 180 OHM	00/00
ACTIVE	R46019	-.--	4701-0470-003	RES, 5, 1/8W, 47 OHM	00/00
ACTIVE	R46020	1.00	4701-0393-003	RES, 5, 1/8W, 39K OHM	00/00
ACTIVE	R46021	-.--	4701-0471-003	RES, 5, 1/8W, 470 OHM	00/00
ACTIVE	R46022	-.--	4701-0470-003	RES, 5, 1/8W, 47 OHM	00/00
ACTIVE	R46023	-.--	4701-0820-003	RES, 5, 1/8W, 82 OHM *	00/00
ACTIVE	R46024	-.--	0002-0000-000	*** REF DESIG NOT USED ***	00/00

LI,283,2.MDATAB01 IFR SYSTEMS, INC.
MON, JAN 4, 1993, 12:46 PM

BILL OF MATERIAL LISTED BY REFERENCE DESIGNATOR
AS OF ALL DATES

ASSEMBLY PART NO.: 7005-9041-200
DESCRIPTION: MECH ASSY, VCO
ITEM MASTER REV: A2 ECO NO: #L145
REV OF THIS BOM: DATE OF LAST ECO: 11/04/92

STATUS	REFERENCE DESIGNATOR	QUANTITY PER ASSY	PART NUMBER	DESCRIPTION		EFFEC
ACTIVE	R46025	-.--	4702-0181-003	RES, 5, 1/4W, 180 OHM		00/00
ACTIVE	R46026	-.--	4701-0470-003	RES, 5, 1/8W, 47 OHM		00/00
ACTIVE	R46027	-.--	4701-0101-003	RES, 5, 1/8W, 100 OHM	*	00/00
ACTIVE	R48001	-.--	4702-0221-003	RES, 5, 1/4W 220 OHM	*	00/00
ACTIVE	R48002	1.00	4702-0510-002	RES,5, 1/4W 51 OHM	*	00/00
ACTIVE	U46001	2.00	5050-2501-100	IC,MSA-0335-22,IC AMP		00/00
ACTIVE	U46002	-.--	5050-2501-100	IC,MSA-0335-22,IC AMP		00/00
ACTIVE	U46003	1.00	5050-2501-300	IC,MSA-0385,AMPLIFIER		00/00

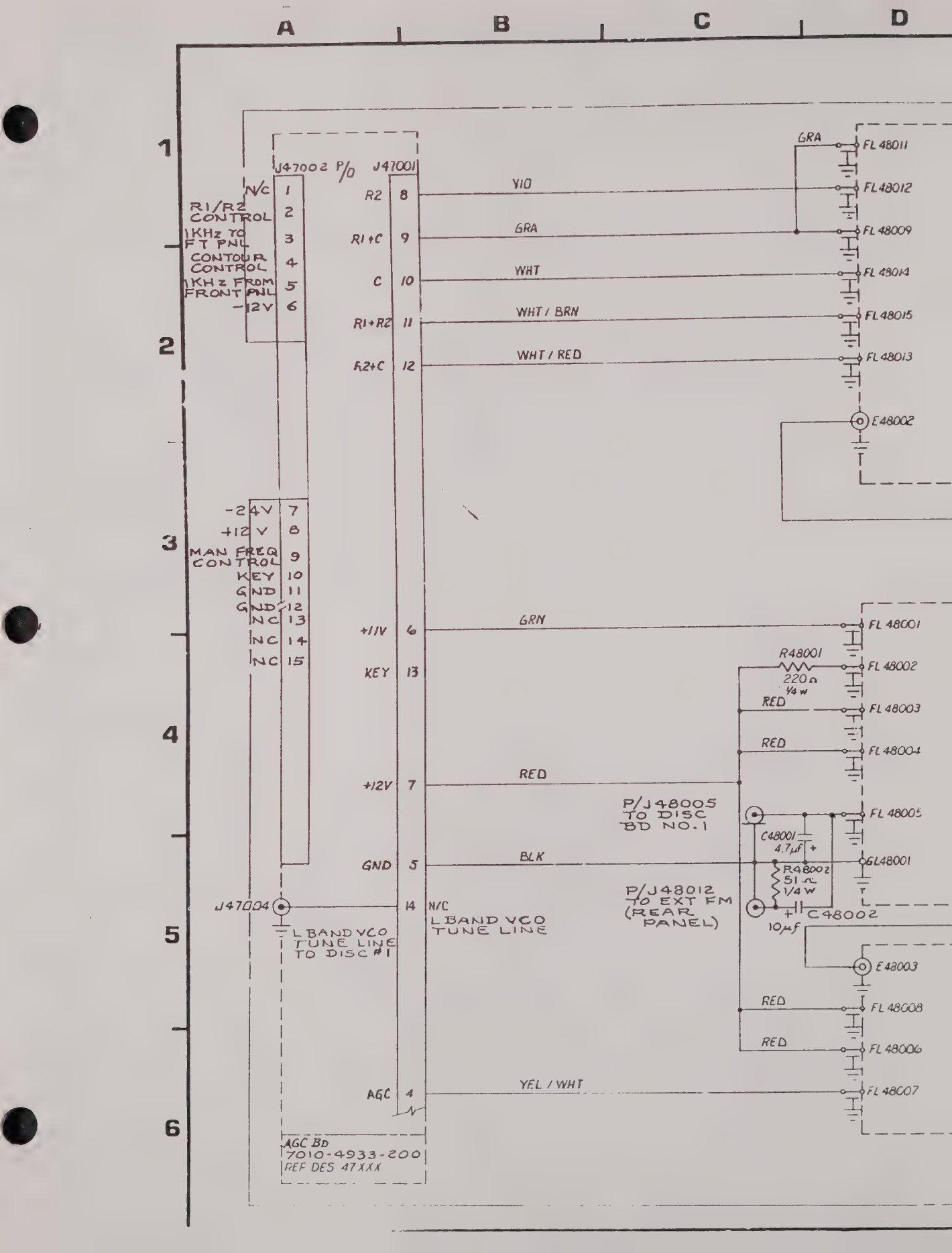
A
B
C
D
1
2
3
4
5
6
J47002 P/O J47001
N/C 1
R1/R2 CONTROL 2
1KHz TO FT PNL 3
CONTOUR CONTROL 4
1KHz FROM FRONT PNL 5
-12V 6
-24V 7
+12V 8
MAN FREQ CONTROL 9
KEY 10
GND 11
GND 12
NC 13
NC 14
NC 15
R2 8
R1+C 9
C 10
R1+R2 11
R2+C 12
+11V 6
KEY 13
+12V 7
GND 5
AGC 4
J47004
L BAND VCO TUNE LINE TO DISC #1
N/C
L BAND VCO TUNE LINE
AGC Bd
7010-4933-200
REF DES 47XXX
YIO
GRA
WHT
WHT / BRN
WHT / RED
GRN
RED
BLK
YEL / WHT
GRA
FL 48011
FL 48012
FL 48009
FL 48014
FL 48015
FL 48013
E 48002
FL 48001
R48001
220Ω 1/4 W
FL 48002
RED
FL 48003
RED
FL 48004
P/J48005 TO DISC BD NO. 1
FL 48005
C48001 4.7μf +
GL48001
R48002 51Ω 1/4 W
P/J48012 TO EXT FM (REAR PANEL)
+ C48002 10μf
E 48003
RED
FL 48008
RED
FL 48006
FL 48007

E F G H

DATE	REV	CHANGE	APVD
2-26-92	A	DESIGN RELEASE	SL
7-31-92	A-1	INC REF L138	SL
10-30-92	A-2	INC REF # L145	SL

ONTOUR DIODE SWITCH
EF DES 44XXX

P/O J47001

FL48016	ORN / WHT	3	COMPENSATION DIODE
GL48002	BLK	15	GND
FL48018	BRN	1	R1 OR R2 DET
FL48017	BLU	2	CONTOUR DET

VCO / SPLITTER
REF DES 46XXX

E48001

6042-4986-200

6042-4986-100

POWER AMP
REF DES 45XXX

E48004

VCO Nº 2 MECH ASS'Y
7005-9041-200
46XX REF DES

IFR INC — 10200 West York Street, Wichita, Kansas 67215

DRAWN	A.OSBURN 1-30-92
CHECKED	S.LEONARD 2-26-92
APPROVED	P.R.HARRIS 2-26-92

TITLE: VCO Nº2 MODULE INTERCONNECT
RD 301A

SIZE	DWG. NO.	REV
C	0000-9041-200	A2

SCALE — | CODE IDENT. 51190 | WEIGHT — | SHEET 1 OF 4

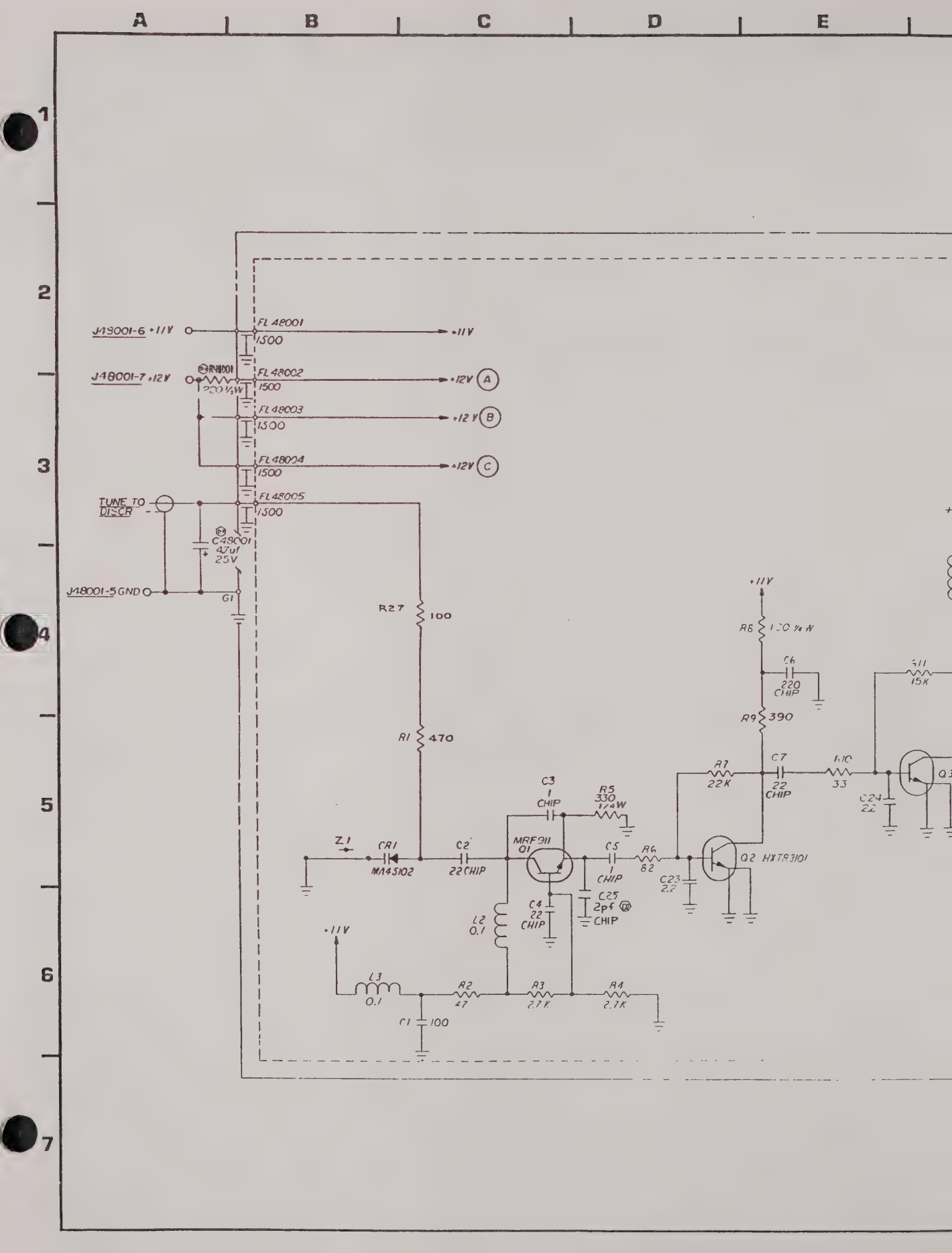
A
B
C
D
E
1
2
3
4
5
6
7
J-19001-6 +11V
J-18001-7 +12V
J-18001-5 GND
TUNE TO DISCR
FL 48001
1500
FL 48002
1500
FL 48003
1500
FL 48004
1500
FL 48005
1500
+11V
+12V A
+12V B
+12V C
R48001
200 1/4W
C48001
47uf
25V
G1
R27 100
R1 470
Z1
CR1
MA45102
C2
22 CHIP
C3
1
CHIP
R5
330
1/4W
MRF911
Q1
C5
1
CHIP
R6
82
C4
22
CHIP
C25
2pf
CHIP
L2
0.1
L3
0.1
R2
47
R3
2.7K
R4
2.7K
C1
100
+11V
R8
130 1/4 W
C6
220
CHIP
R9
390
R7
22K
C7
22
CHIP
R10
33
C23
22
Q2 HXTR3101
C24
22
15K

F G H J K L

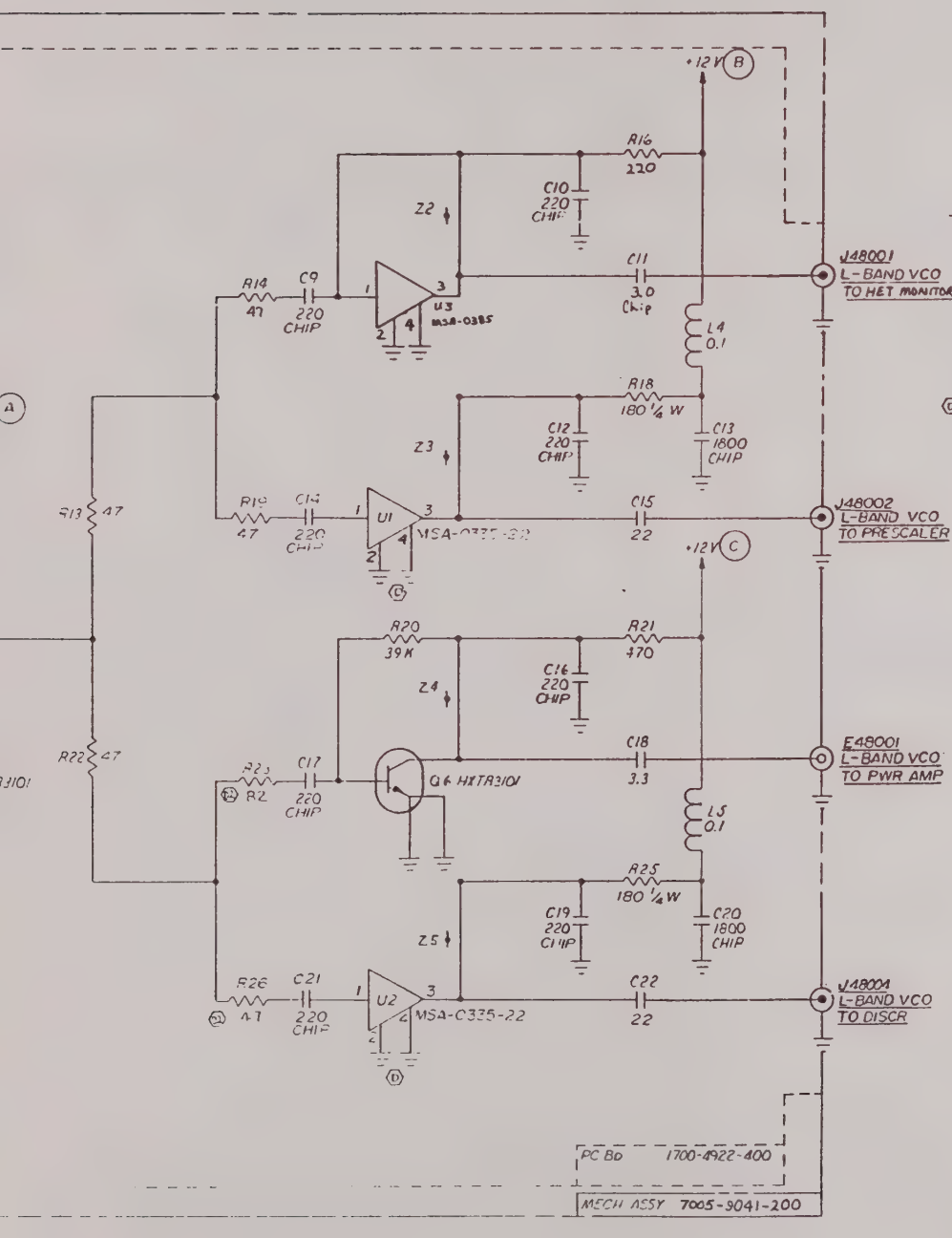

NOTES:

1. ALL REF N°'S CARRY AN ASSIGNED DESIGNATOR SERIES. THIS SCHEMATIC CARRIES SERIES 46000 (e.g. R1 IS 46001).
2. ALL RESISTORS ARE 1/4 W, 5%, UNLESS OTHERWISE SPECIFIED.
3. ALL RESISTANCES ARE IN OHMS.
4. ALL CAPACITANCES ARE IN PICOFARADS.
5. ALL INDUCTANCES ARE IN MICROHENRIES.
6. LAST REF. N° USED: C25; L6; R26; Q7; FL3; Z5; CR1, U3
7. MICROSTRIP SPECS: Z1..... .085 x 1.2 LG
   Z2..... .025 x .72 LG
   Z3..... .025 x .72 LG
   Z4..... .025 x .72 LG
   Z5..... .025 x .72 LG
8. NOT USED R12; R17; R24; C8; Q5, Q4, R15
9. REF DES OUT OF SEQUENCE:
   L6 I/F4
   R4 I/C6
   C23 I/D6
   C24 I/E5

DRAWN B. PUCKETT 11/23/92	IFR INC	
CHECKED S. LEONARD 11/23/92	TITLE SCHEMATIC VCO/SPLITTER AD-301A	
APPROVED P.R. HARRIS 10-28-92	SIZE D	DWG. NO. 0000 9041-200 REV A2
SCALE	CODE IDENT 51190	WEIGHT SHEET 2 OF 4

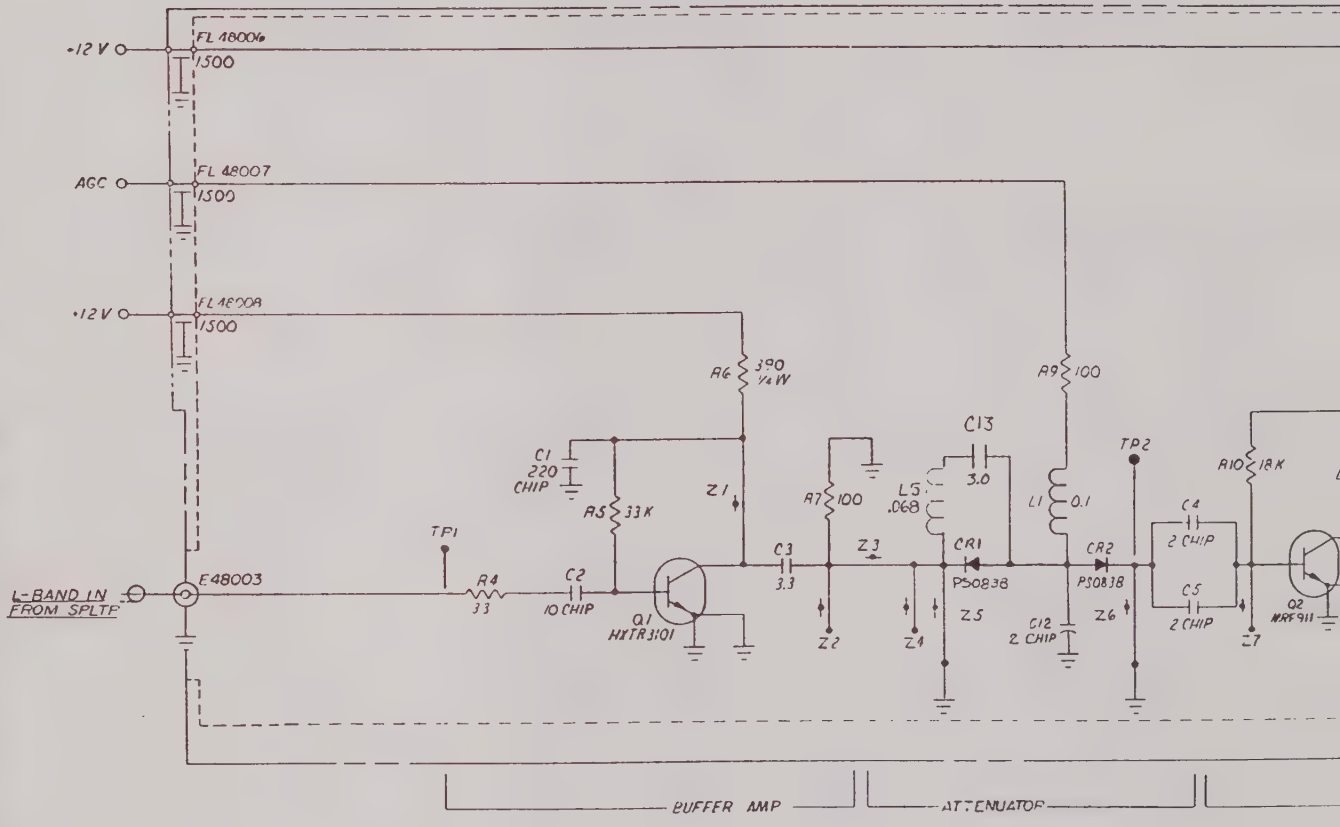
-12 V
FL 48006
1500
AGC
FL 48007
1500
+12 V
FL 48008
1500
L-BAND IN FROM SPLTR
E48003
TP1
R4 33
C2 10 CHIP
C1 220 CHIP
R5 33K
Q1 HXTR3101
R6 390 1/4W
Z1
C3 3.3
Z2
R7 100
Z3
L5 .068
Z4
C13 3.0
CR1 PS0838
Z5
C12 2 CHIP
L1 0.1
R9 100
CR2 PS0838
Z6
TP2
C4 2 CHIP
C5 2 CHIP
Z7
R10 18K
Q2 NRF911
BUFFER AMP
ATTENUATOR

F G H J K L

SEE SHEET 1

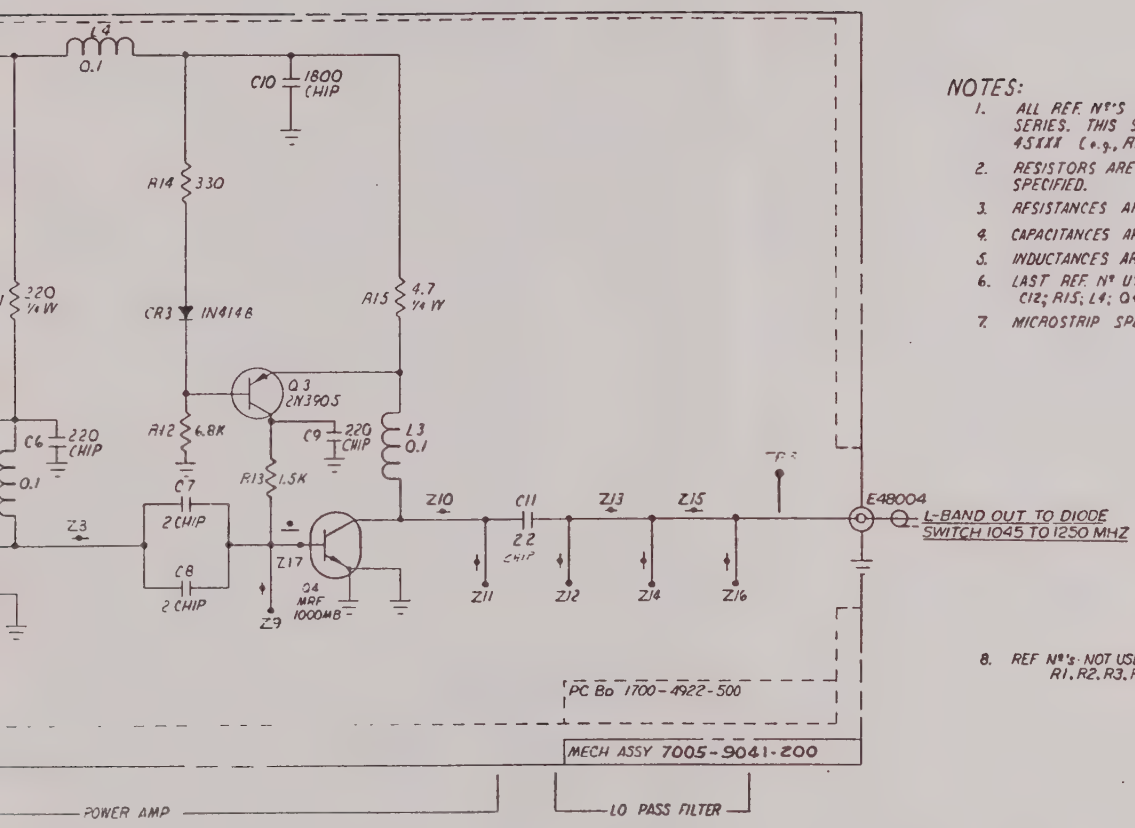

NOTES:

1. ALL REF. Nº'S CARRY AN ASSIGNED DESIGNATOR SERIES. THIS SCHEMATIC CARRIES SERIES 45XXX (e.g., R1 IS R45001).
2. RESISTORS ARE 1/4W, 5% UNLESS OTHERWISE SPECIFIED.
3. RESISTANCES ARE IN OHMS.
4. CAPACITANCES ARE IN PICOFARADS.
5. INDUCTANCES ARE IN MICROHENRIES.
6. LAST REF. Nº USED: C12; R15; L4; Q4; Z17; CR3; E4
7. MICROSTRIP SPECS:

Z1	.....	.025 x .76 LG
Z2	.....	.085 x .84 LG
Z3	.....	.025 x .95 LG
Z4	.....	.085 x .84 LG
Z5	.....	.025 x 1.00 LG
Z6	.....	.025 x 1.00 LG
Z7	.....	.200 x .78 LG
Z8	.....	.085 x 1.87 LG
Z9	.....	.200 x 1.00 LG
Z10	.....	.085 x .87 LG
Z11	.....	.200 x .90 LG
Z12	.....	.200 x .46 LG
Z13	.....	.025 x .49 LG
Z14	.....	.200 x .96 LG
Z15	.....	.025 x .49 LG
Z16	.....	.200 x .46 LG
Z17	.....	.100 x .30 LG

8. REF Nº's NOT USED: R1, R2, R3, R8, E1, E2

DRAWN A. OSBURN	DATE 7-22-92	-IFR INC- 10200 West York Street Wichita, Kansas 67215
CHECKED S. LEONARD	DATE 7-23-92	TITLE SCHEMATIC PWR AMP RD-301A
APPROVED P.R. HARRIS	DATE 7-23-92	SIZE D DWG NO. 0000-9041-200 REV A-2
		SCALE CODE IDENT 51180 WEIGHT SHEET 3 OF 4

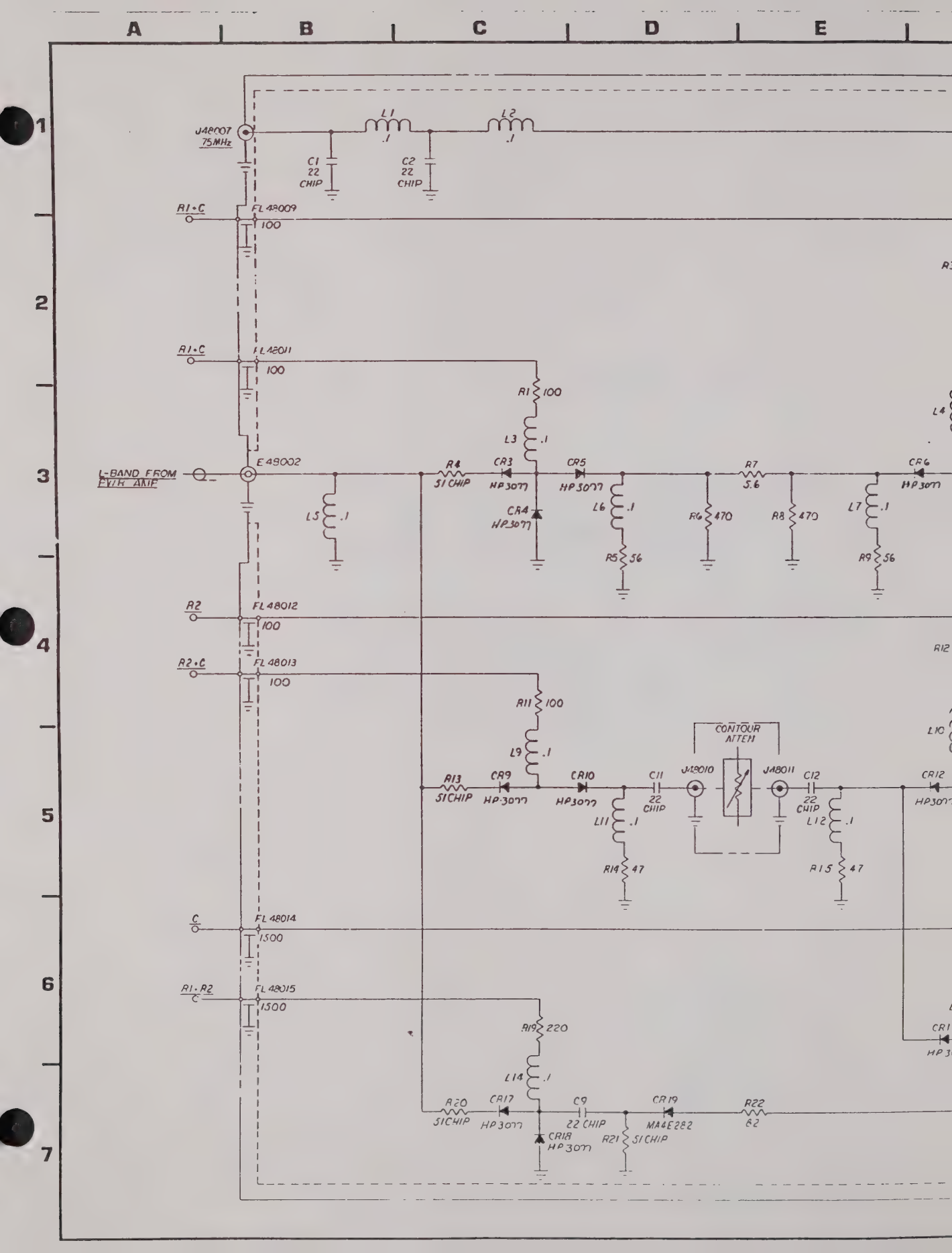
A
B
C
D
E
1
2
3
4
5
6
7
J48007
75MHz
L1
.1
L2
.1
C1
22
CHIP
C2
22
CHIP
R1•C
FL48009
100
R1•C
FL48011
100
R1 100
L3 .1
L-BAND FROM
EVTR ANT
E48002
L5 .1
R4
51 CHIP
CR3
HP3077
CR5
HP3077
CR4
HP3077
L6 .1
R5 56
R6 470
R7
5.6
R8 470
CR6
HP3077
L7 .1
R9 56
R2
FL48012
100
R2•C
FL48013
100
R11 100
L9 .1
CONTOUR
ATTEN
R13
51CHIP
CR9
HP3077
CR10
HP3077
C11
22
CHIP
J48010
J48011
C12
22
CHIP
CR12
HP3077
L11 .1
R14 47
L12 .1
R15 47
C
FL48014
1500
R1•R2
C
FL48015
1500
R19 220
L14 .1
R20
51CHIP
CR17
HP3077
C9
22 CHIP
CR19
MA4E282
R22
82
CR18
HP3077
R21
51CHIP

F G H J K L

SEE SHEET 1

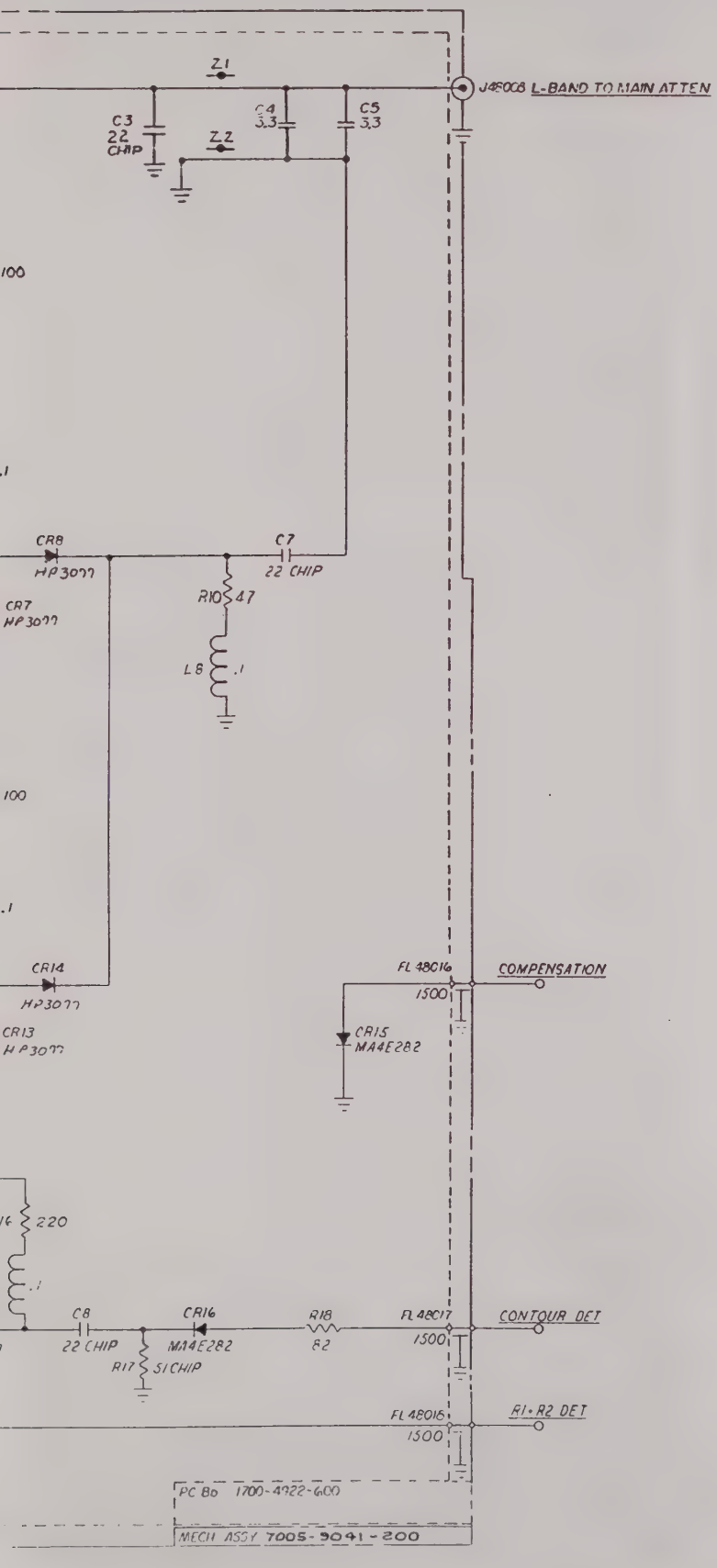

NOTES:

1. ALL REF. Nº'S CARRY AN ASSIGNED DESIGNATOR SERIES. THIS SCHEMATIC CARRIES SERIES 44XXX (e.g., R1 IS R44001).
2. ALL RESISTORS ARE ⅛ W, 5%.
3. ALL RESISTANCE IS EXPRESSED IN OHMS.
4. ALL CAPACITANCE IS EXPRESSED IN PICOFARADS.
5. ALL INDUCTANCE IS EXPRESSED IN MICROHENRIES.
6. LAST REF. Nº USED: C12; R22; L14; CR19; FL18; E1
7. MICROSTRIP SPECS: Z1..... .025 x .93
   Z2..... .025 x .93
8. REF Nº's OUT OF SEQUENCE: C10 ..... 1C CF11 ... F7
   C11 ..... 5D
   C12 ..... 5E
9. REF DES NOT USED: C6, R2, CR1, CR2, FL10, C10

	-IFR INC-	
DRAWN A. OSBURN 7-23-92	TITLE SCHEMATIC CONTOUR DIODE SW/DIPLEXER RD-301A	
CHECKED S LEONARD 7-23-92	SIZE D	DWG. NO. 0000-9041-200
APPROVED PR HARRIS 7-23-92	SCALE	REV A-2
	CODE IDENT 91180	WEIGHT
		SHEET 4 OF 4

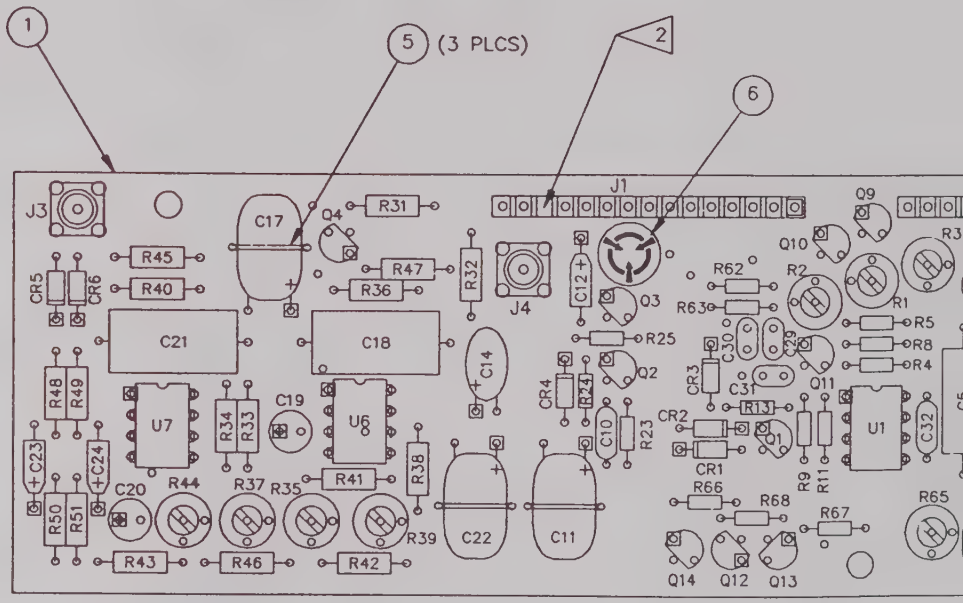
1
5 (3 PLCS)
2
6
J3
J1
J4
C17
Q4
R31
R45
R40
R47
R36
R32
C12
Q3
Q9
Q10
R3
R62
R2
R1
R63
R5
R8
R4
CR5
CR6
C21
C18
C14
R25
C30
C29
Q2
CR3
C31
Q11
R48
R49
U7
R34
R33
C19
U6
CR4
R24
C10
R23
CR2
R13
Q1
U1
C32
C23
C24
R38
CR1
R9
R11
C20
R44
R37
R35
R41
R66
R68
R67
R65
R50
R51
R39
C22
C11
R43
R46
R42
Q14
Q12
Q13

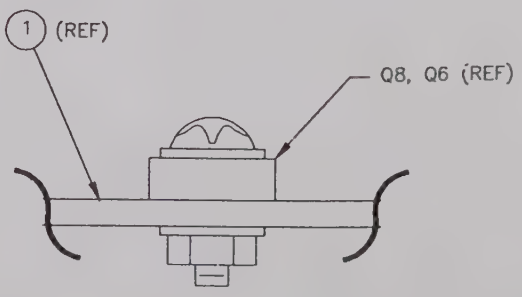
1 (REF)
Q8, Q6 (REF)

VIEW A–A

N.T.S.

E F G

DATE	REV	CHANGE	APVD
1-28-91	B	DESIGN RELEASE	SL

NOTES:

1. ALL REFERENCE DESIGNATORS CARRY AN ASSIGNED DESIGNATOR SERIES, THIS DWG. CARRIES SERIES 47000 (i.e., R1 IS R47001).
2. REMOVE PIN 13 FOR KEY.
3. REMOVE PIN 10 FOR KEY.
4. REFERENCE SCHEMATIC: 0000-4933-200

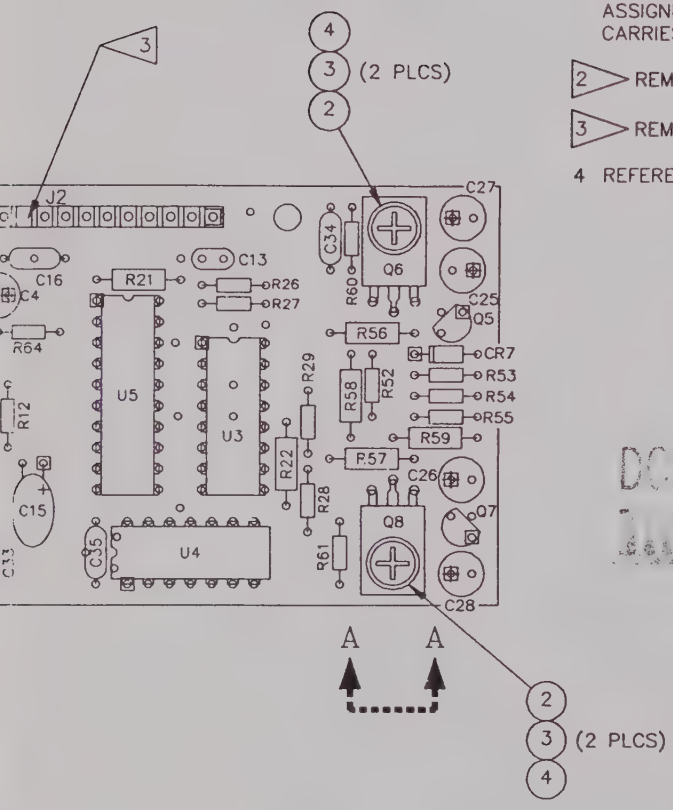

CAUTION:
CONTAINS PARTS AND ASSEMBLIES SUSCEPTIBLE TO DAMAGE BY ELECTROSTATIC DISCHARGE (ESD).

IFR SYSTEMS INC
10200 West York St., Wichita, Kansas 67215

DRAWN DATE: SIGLER 7-12--90	TITLE: PCB ASSEMBLY, AGC
CHECKED DATE: L. GREENBANK 1-28-91	
APPROVED DATE: J. SCHMIDT 1-28-91	SIZE: C; DWG. NO.: 7010-4933-200; REV: B
	SCALE: 2:1; DO NOT SCALE; FSCM 51190; SHEET 1 OF 1

ASSY NO.	REVISION	DESCRIPTION	LAST ECN	DATE INC
7010-4933-200	B	PCB ASSY, AGC		10/30/71

STAT	REF.DES.	QTY	COMP. PART NO.	DESCRIPTION	EFFECTIVE
ACT	*01	1.00	1700-4923-200	PC BD, AGC	00/00/00
ACT	*02	2.00	2803-0313-006	SCREW,4-40 X 5/16 PPHM	00/00/00
ACT	*03	4.00	2840-0000-009	WASHER,FLAT,4,MS15795-803	87/01/19
ACT	*04	2.00	2850-0000-020	NUT,HEX,SMALL PAT,4-40	00/00/00
ACT	*05	.00	1050-0000-074	WIRE,BUS,TINNED COPPER,24GA	00/00/00
ACT	*06	.00	2400-7856-800	LABEL,ESD	00/00/00
ACT	C47001	13.00	0002-0000-000	*** REF DESIG NOT USED ***	00/00/00
ACT	C47002	-.--	0002-0000-000	*** REF DESIG NOT USED ***	00/00/00
ACT	C47003	-.--	0002-0000-000	*** REF DESIG NOT USED ***	00/00/00
ACT	C47004	1.00	1580-1000-200	CAP,UF, 10, 25V,ELE RDL	00/00/00
ACT	C47005	1.00	1502-0333-006	CAP,UF .033, 50V,PC, 5	00/00/00
ACT	C47006	-.--	0002-0000-000	*** REF DESIG NOT USED ***	00/00/00
ACT	C47007	-.--	0002-0000-000	*** REF DESIG NOT USED ***	00/00/00
ACT	C47009	-.--	0002-0000-000	*** REF DESIG NOT USED ***	00/00/00
ACT	C47010	5.00	1521-0000-008	CAP,UF .10 50V,DIP Z5U *	00/00/00
ACT	C47011	1.00	1508-0157-020	CAP, UF 150, 15V, TANT RDL *	00/00/00
ACT	C47012	3.00	1507-0105-018	CAP,uF 1.0, 35V,TANT, 20 *	00/00/00
ACT	C47013	1.00	1506-0151-017	CAP,PF 150, 100V,NPO, 5	00/00/00
ACT	C47014	4.00	1605-3360-475	CAP,UF 33, 16V,TANT,RDL *	00/00/00
ACT	C47015	-.--	1605-3360-475	CAP,UF 33, 16V,TANT,RDL *	00/00/00
ACT	C47016	-.--	1521-0000-008	CAP,UF .10 50V,DIP Z5U *	00/00/00
ACT	C47017	2.00	1508-0476-018	CAP,uF 47, 35V,TANT,RDL *	00/00/00
ACT	C47018	2.00	1502-0104-010	CAP,UF .10, 50V,PC, 5	00/00/00
ACT	C47019	-.--	1605-3360-475	CAP,UF 33, 16V,TANT,RDL *	00/00/00
ACT	C47020	-.--	1605-3360-475	CAP,UF 33, 16V,TANT,RDL *	00/00/00
ACT	C47021	-.--	1502-0104-010	CAP,UF .10, 50V,PC, 5	00/00/00

ASSY NO.	REVISION	DESCRIPTION	LAST ECN	DATE INC
7010-4933-200	B	PCB ASSY, AGC		10/30/71

STAT	REF.DES.	QTY	COMP. PART NO.	DESCRIPTION	EFFECTIVE
ACT	C47022	-.--	1508-0476-018	CAP,uF 47, 35V,TANT,RDL *	00/00/00
ACT	C47023	-.--	1507-0105-018	CAP,uF 1.0, 35V,TANT, 20 *	00/00/00
ACT	C47024	-.--	1507-0105-018	CAP,uF 1.0, 35V,TANT, 20 *	00/00/00
ACT	C47025	4.00	1580-4792-305	CAPACITOR 4.7 uF,35V *	00/00/00
ACT	C47026	-.--	1580-4792-305	CAPACITOR 4.7 uF,35V *	00/00/00
ACT	C47027	-.--	1580-4792-305	CAPACITOR 4.7 uF,35V *	00/00/00
ACT	C47028	-.--	1580-4792-305	CAPACITOR 4.7 uF,35V *	00/00/00
ACT	C47029	3.00	1506-0102-017	CAP, pF 1000, 100V, NPO 5 *	00/00/00
ACT	C47032	-.--	1521-0000-008	CAP,UF .10 50V,DIP Z5U *	00/00/00
ACT	C47033	1.00	1506-0272-017	CAP,pF 2700 100V NPO *	00/00/00
ACT	C47034	-.--	1521-0000-008	CAP,UF .10 50V,DIP Z5U *	00/00/00
ACT	C47035	-.--	1521-0000-008	CAP,UF .10 50V,DIP Z5U *	00/00/00
ACT	C49030	-.--	1506-0102-017	CAP, pF 1000, 100V, NPO 5 *	00/00/00
ACT	C49031	-.--	1506-0102-017	CAP, pF 1000, 100V, NPO 5 *	00/00/00
ACT	CR47001	7.00	4815-0000-003	DIODE, 1N4148 ,SIGNAL, 75PRV	00/00/00
ACT	CR47002	-.--	4815-0000-003	DIODE, 1N4148 ,SIGNAL, 75PRV	00/00/00
ACT	CR47003	-.--	4815-0000-003	DIODE, 1N4148 ,SIGNAL, 75PRV	00/00/00
ACT	CR47004	-.--	4815-0000-003	DIODE, 1N4148 ,SIGNAL, 75PRV	00/00/00
ACT	CR47005	-.--	4815-0000-003	DIODE, 1N4148 ,SIGNAL, 75PRV	00/00/00
ACT	CR47006	-.--	4815-0000-003	DIODE, 1N4148 ,SIGNAL, 75PRV	00/00/00
ACT	CR47007	-.--	4815-0000-003	DIODE, 1N4148 ,SIGNAL, 75PRV	00/00/00
ACT	J47001	2.00	2115-0000-050	WAFER,PCB,.100C,STR,15-P	00/00/00
ACT	J47002	-.--	2115-0000-050	WAFER,PCB,.100C,STR,15-P	00/00/00
ACT	J47003	2.00	2200-2010-400	CONN,M SMB,PC MTG,STR,.453LG	00/00/00
ACT	J47004	-.--	2200-2010-400	CONN,M SMB,PC MTG,STR,.453LG	00/00/00
ACT	Q47001	4.00	4807-0000-002	TRANS, 2N3905 ,PNP HS SW	00/00/00

ASSY NO.	REVISION	DESCRIPTION	LAST ECN	DATE INC
7010-4933-200	B	PCB ASSY, AGC		10/30/71

STAT	REF.DES.	QTY	COMP. PART NO.	DESCRIPTION	EFFECTIVE
ACT	Q47002	-.--	4807-0000-002	TRANS, 2N3905 ,PNP HS SW	00/00/00
ACT	Q47003	1.00	4801-0000-001	TRANSISTOR NPN HS SW *	00/00/00
ACT	Q47004	1.00	4805-0000-001	TRANS,2N2907A,PNP HS SW (3251)	00/00/00
ACT	Q47005	5.00	4807-0000-001	TRANS, 2N3903 ,NPN HS SW	00/00/00
ACT	Q47006	2.00	4811-0000-001	TRANS,SJE1461 ,NPN PWR AMP	00/00/00
ACT	Q47007	-.--	4807-0000-002	TRANS, 2N3905 ,PNP HS SW	00/00/00
ACT	Q47008	-.--	4811-0000-001	TRANS,SJE1461 ,NPN PWR AMP	00/00/00
ACT	Q47009	-.--	4807-0000-001	TRANS, 2N3903 ,NPN HS SW	00/00/00
ACT	Q47010	-.--	4807-0000-001	TRANS, 2N3903 ,NPN HS SW	00/00/00
ACT	Q47011	-.--	4807-0000-001	TRANS, 2N3903 ,NPN HS SW	00/00/00
ACT	Q47012	-.--	4807-0000-001	TRANS, 2N3903 ,NPN HS SW	00/00/00
ACT	Q47013	-.--	4807-0000-002	TRANS, 2N3905 ,PNP HS SW	00/00/00
ACT	Q47014	1.00	5050-2601-000	TRANS,SF-90038,FET *SELECTED	87/01/23
ACT	R47001	2.00	4752-0502-002	POT 5K OHM	00/00/00
ACT	R47002	-.--	4752-0502-002	POT 5K OHM	00/00/00
ACT	R47003	1.00	4752-0104-002	POT 100K OHM	00/00/00
ACT	R47004	1.00	4701-0224-003	RES, 5, 1/8W, 220K OHM *	00/00/00
ACT	R47005	1.00	4701-0821-003	RES, 5, 1/8W, 820 OHM	00/00/00
ACT	R47006	-.--	0002-0000-000	*** REF DESIG NOT USED ***	00/00/00
ACT	R47007	-.--	0002-0000-000	*** REF DESIG NOT USED ***	00/00/00
ACT	R47008	1.00	4701-0394-003	RES, 5, 1/8W, 390K OHM	00/00/00
ACT	R47009	1.00	4701-0183-003	RES,5,1/8W, 18K OHM *	00/00/00
ACT	R47010	-.--	0002-0000-000	*** REF DESIG NOT USED ***	00/00/00
ACT	R47011	3.00	4701-0103-003	RES, 5, 1/8W, 10K OHM *	00/00/00
ACT	R47012	5.00	4701-0104-003	RES, 5, 1/8W, 100K OHM	00/00/00
ACT	R47013	3.00	4701-0102-003	RES, 5, 1/8W, 1.0K OHM	00/00/00

ASSY NO.	REVISION	DESCRIPTION	LAST ECN	DATE INC
7010-4933-200	B	PCB ASSY, AGC		10/30/71

STAT	REF.DES.	QTY	COMP. PART NO.	DESCRIPTION	EFFECTIVE
ACT	R47014	-.--	0002-0000-000	*** REF DESIG NOT USED ***	00/00/00
ACT	R47020	-.--	0002-0000-000	*** REF DESIG NOT USED ***	00/00/00
ACT	R47021	4.00	4702-0103-003	RES,5, 1/4W 10K OHM *	00/00/00
ACT	R47022	1.00	4702-0222-003	RES, 5%, 1/4W 2.2K OHM *	00/00/00
ACT	R47023	-.--	4701-0104-003	RES, 5, 1/8W, 100K OHM	00/00/00
ACT	R47024	-.--	4701-0103-003	RES, 5, 1/8W, 10K OHM *	00/00/00
ACT	R47025	-.--	4701-0102-003	RES, 5, 1/8W, 1.0K OHM	00/00/00
ACT	R47026	3.00	4701-0222-003	RES, 5, 1/8W, 2.2K OHM	00/00/00
ACT	R47027	-.--	4701-0222-003	RES, 5, 1/8W, 2.2K OHM	00/00/00
ACT	R47028	2.00	4701-0153-003	RES, 5, 1/8W, 15K OHM	00/00/00
ACT	R47029	-.--	4701-0153-003	RES, 5, 1/8W, 15K OHM	00/00/00
ACT	R47030	-.--	0002-0000-000	*** REF DESIG NOT USED ***	00/00/00
ACT	R47031	3.00	4706-1002-001	RES, 1, 1/4W, 10.0K OHM *	00/00/00
ACT	R47032	-.--	4706-1002-001	RES, 1, 1/4W, 10.0K OHM *	00/00/00
ACT	R47033	-.--	4706-1002-001	RES, 1, 1/4W, 10.0K OHM *	00/00/00
ACT	R47034	2.00	4702-0153-003	RES, 5, 1/4W, 15K OHM	00/00/00
ACT	R47035	1.00	4752-0203-002	POT 20K OHM	00/00/00
ACT	R47036	1.00	4706-8251-001	RES, 1, 1/4W, 8.25K OHM	00/00/00
ACT	R47037	1.00	4752-0503-002	POT 50K OHM	00/00/00
ACT	R47038	-.--	4702-0103-003	RES,5, 1/4W 10K OHM *	00/00/00
ACT	R47039	2.00	4752-0103-002	POT 10K OHM	00/00/00
ACT	R47040	1.00	4702-0273-003	RES, 5, 1/4W, 27K OHM	00/00/00
ACT	R47041	1.00	4702-0471-003	RES, 5, 1/4W, 470 OHM	00/00/00
ACT	R47042	-.--	4702-0153-003	RES, 5, 1/4W, 15K OHM	00/00/00
ACT	R47043	1.00	4702-0332-003	RES, 5, 1/4W, 3.3K OHM	86/02/06
ACT	R47044	-.--	4752-0103-002	POT 10K OHM	00/00/00

ASSY NO.	REVISION	DESCRIPTION	LAST ECN	DATE INC
7010-4933-200	B	PCB ASSY, AGC		10/30/71

STAT	REF.DES.	QTY	COMP. PART NO.	DESCRIPTION		EFFECTIVE
ACT	R47045	-.--	4702-0103-003	RES,5, 1/4W 10K OHM	*	00/00/00
ACT	R47046	2.00	4702-0472-003	RES, 5, 1/4W, 4.7K OHM		00/00/00
ACT	R47047	-.--	4702-0103-003	RES,5, 1/4W 10K OHM	*	00/00/00
ACT	R47048	-.--	4702-0472-003	RES, 5, 1/4W, 4.7K OHM		00/00/00
ACT	R47049	2.00	4702-0563-003	RES,5, 1/4W 56K OHM	*	00/00/00
ACT	R47050	1.00	4702-0223-003	RES, 5%, 1/4W 22K OHM	*	00/00/00
ACT	R47051	-.--	4702-0563-003	RES,5, 1/4W 56K OHM	*	00/00/00
ACT	R47052	1.00	4701-0682-003	RES, 5, 1/8W, 6.8K OHM	*	00/00/00
ACT	R47053	1.00	4701-0392-003	RES, 5, 1/8W, 3.9K OHM	*	00/00/00
ACT	R47054	-.--	4701-0222-003	RES, 5, 1/8W, 2.2K OHM		00/00/00
ACT	R47055	1.00	4701-0822-003	RES,5,1/8W 8.2K OHM	*	00/00/00
ACT	R47056	2.00	4702-0470-003	RES, 5, 1/4W, 47 OHM		00/00/00
ACT	R47057	-.--	4702-0470-003	RES, 5, 1/4W, 47 OHM		00/00/00
ACT	R47058	2.00	4702-0100-003	RES, 5, 1/4W, 10 OHM	*	00/00/00
ACT	R47059	-.--	4702-0100-003	RES, 5, 1/4W, 10 OHM	*	00/00/00
ACT	R47060	-.--	4701-0102-003	RES, 5, 1/8W, 1.0K OHM		00/00/00
ACT	R47061	1.00	4701-0561-003	RES, 5, 1/8W, 560 OHM		00/00/00
ACT	R47062	-.--	4701-0104-003	RES, 5, 1/8W, 100K OHM		00/00/00
ACT	R47063	-.--	4701-0104-003	RES, 5, 1/8W, 100K OHM		00/00/00
ACT	R47064	-.--	4701-0104-003	RES, 5, 1/8W, 100K OHM		00/00/00
ACT	R47065	1.00	4752-0102-002	POT 1K OHM		00/00/00
ACT	R47066	2.00	4701-0472-003	RES, 5, 1/8W, 4.7K OHM		00/00/00
ACT	R47067	-.--	4701-0472-003	RES, 5, 1/8W, 4.7K OHM		00/00/00
ACT	R47068	-.--	4701-0103-003	RES, 5, 1/8W, 10K OHM	*	00/00/00
ACT	U47001	1.00	3135-0000-054	IC,412,DUAL J-FET OP AMP	*	00/00/00
ACT	U47002	-.--	0002-0000-000	*** REF DESIG NOT USED ***		00/00/00

ASSY NO.	REVISION	DESCRIPTION	LAST ECN	DATE INC
7010-4933-200	B	PCB ASSY, AGC		10/30/71

STAT	REF.DES.	QTY	COMP. PART NO.	DESCRIPTION	EFFECTIVE
ACT	U47003	1.00	3133-0000-006	IC,4049UB,HEX BUFFER/CONVERTER	00/00/00.
ACT	U47004	1.00	3214-9000-000	IC,74HC00,HS CMOS,4*2-INP NAND	00/00/00
ACT	U47005	1.00	3214-9244-000	IC,74HC244,OCTAL BUF/DRVR/RCVR	00/00/00
ACT	U47006	2.00	3130-0000-034	IC 741C PLASTIC DIP OP-AMP	00/00/00
ACT	U47007	-.--	3130-0000-034	IC 741C PLASTIC DIP OP-AMP	00/00/00

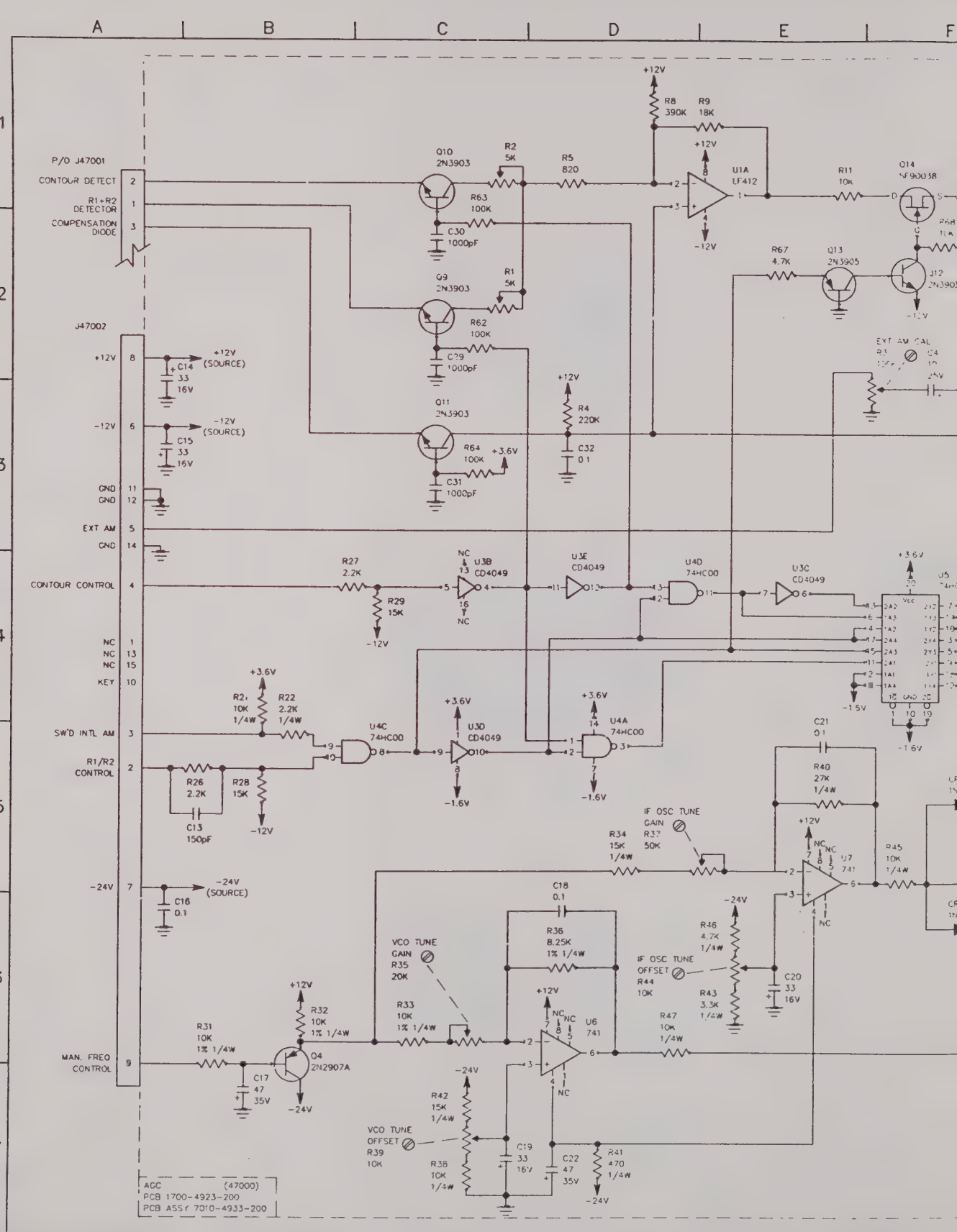
A
B
C
D
E
F
1
2
3
4
5
6
7
P/O J47001
CONTOUR DETECT
R1+R2 DETECTOR
COMPENSATION DIODE
J47002
+12V
-12V
GND
EXT AM
CONTOUR CONTROL
SW'D INTL AM
R1/R2 CONTROL
-24V
MAN. FREQ CONTROL
KEY
NC
+12V (SOURCE)
-12V (SOURCE)
-24V (SOURCE)
Q10 2N3903
Q9 2N3903
Q11 2N3903
Q4 2N2907A
Q14 VF90038
Q13 2N3905
Q12 2N3905
U1A LF412
U3B CD4049
U3E CD4049
U3C CD4049
U3D CD4049
U4C 74HC00
U4D 74HC00
U4A 74HC00
U5 74HC
U6 741
U7 741
R1 5K
R2 5K
R4 220K
R5 820
R8 390K
R9 18K
R11 10K
R26 2.2K
R27 2.2K
R28 15K
R29 15K
R31 10K 1% 1/4W
R32 10K 1% 1/4W
R33 10K 1% 1/4W
R34 15K 1/4W
R36 8.25K 1% 1/4W
R37 50K
R38 10K 1/4W
R40 27K 1/4W
R41 470 1/4W
R42 15K 1/4W
R43 3.3K 1/4W
R44 10K
R45 10K 1/4W
R46 4.7K 1/4W
R47 10K 1/4W
R62 100K
R63 100K
R64 100K
R67 4.7K
C13 150pF
C14 33 16V
C15 33 16V
C16 0.1
C17 47 35V
C18 0.1
C19 33 16V
C20 33 16V
C21 0.1
C22 47 35V
C29 1000pF
C30 1000pF
C31 1000pF
C32 0.1
IF OSC TUNE GAIN R37 50K
IF OSC TUNE OFFSET R44 10K
VCO TUNE GAIN R35 20K
VCO TUNE OFFSET R39 10K
EXT AM CAL
AGC (47000)
PCB 1700-4923-200
PCB ASSY 7010-4933-200

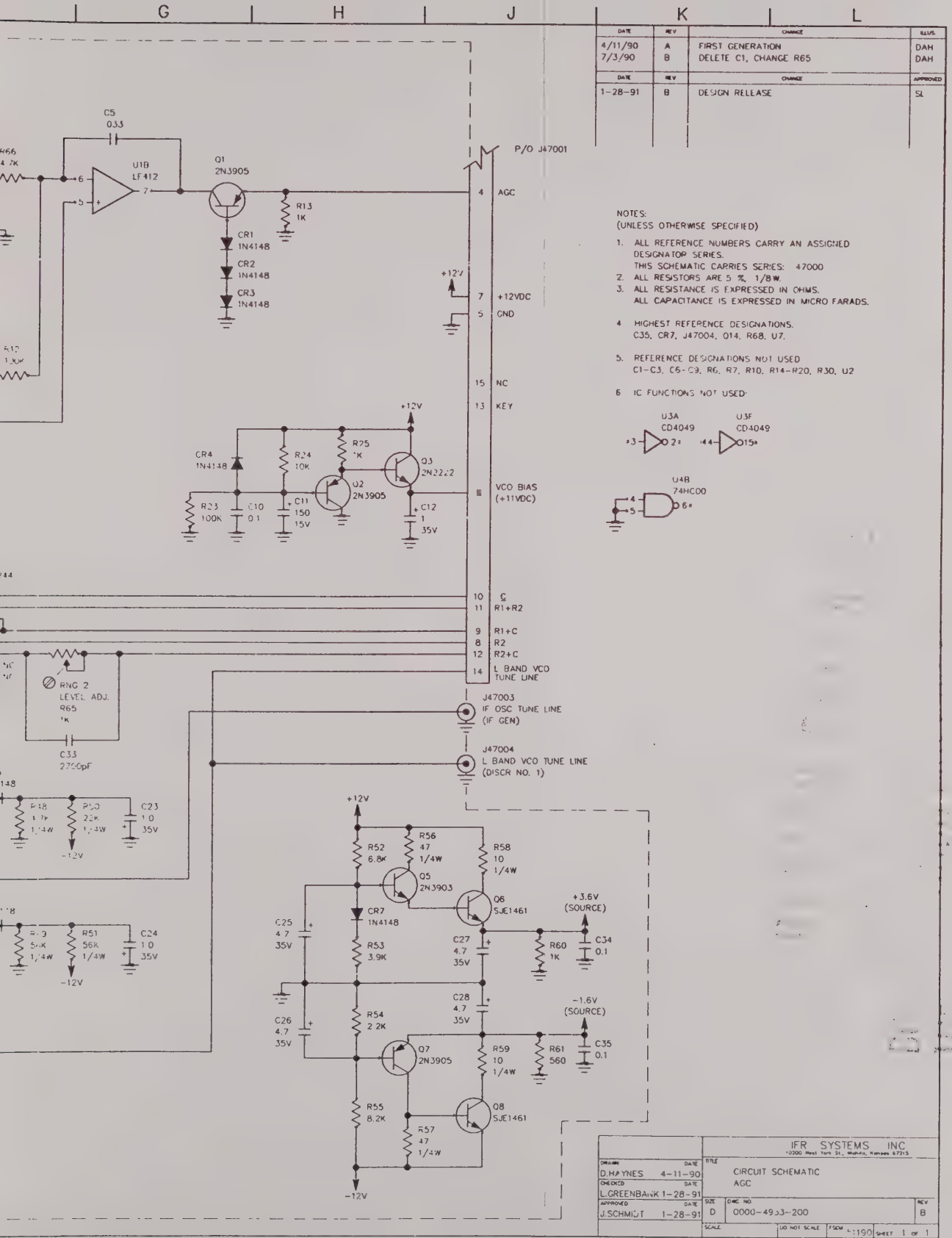

DATE	REV	CHANGE	ILLUS
4/11/90	A	FIRST GENERATION	DAH
7/3/90	B	DELETE C1, CHANGE R65	DAH
DATE	REV	CHANGE	APPROVED
1-28-91	B	DESIGN RELEASE	SL

NOTES:
(UNLESS OTHERWISE SPECIFIED)

1. ALL REFERENCE NUMBERS CARRY AN ASSIGNED DESIGNATOR SERIES.
   THIS SCHEMATIC CARRIES SERIES: 47000
2. ALL RESISTORS ARE 5 %, 1/8W.
3. ALL RESISTANCE IS EXPRESSED IN OHMS.
   ALL CAPACITANCE IS EXPRESSED IN MICRO FARADS.
4. HIGHEST REFERENCE DESIGNATIONS.
   C35, CR7, J47004, Q14, R68, U7.
5. REFERENCE DESIGNATIONS NOT USED
   C1-C3, C6-C9, R6, R7, R10, R14-R20, R30, U2
6. IC FUNCTIONS NOT USED:

DRAWN	D.HAYNES	DATE 4-11-90
CHECKED	L.GREENBANK	DATE 1-28-91
APPROVED	J.SCHMIDT	DATE 1-28-91

IFR SYSTEMS INC
10200 West York St., Wichita, Kansas 67215

TITLE: CIRCUIT SCHEMATIC
AGC

SIZE D | DWG NO 0000-4933-200 | REV B

SCALE | DO NOT SCALE | FSCM 51190 | SHEET 1 OF 1

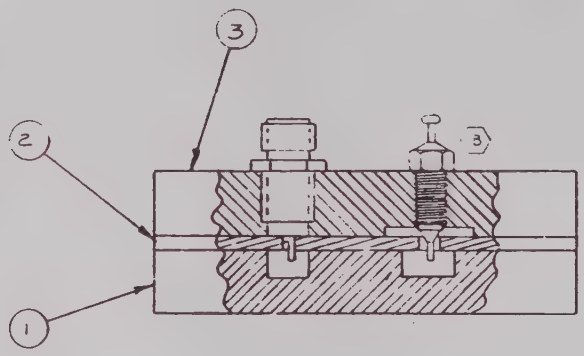
3
2
3
1

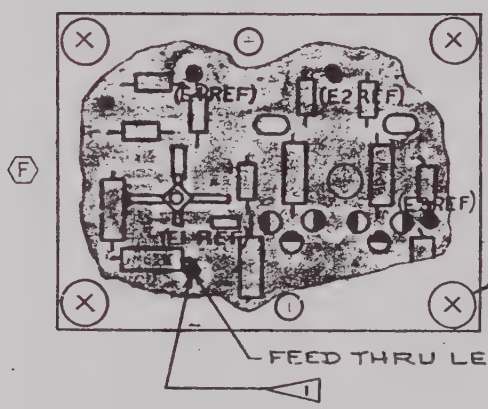
(E1 REF)
(E2 REF)
(E3 REF)
(E4 REF)
F
6
4 PLCS
B-1
1
FEED THRU LEAD

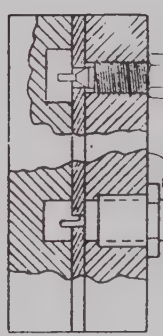

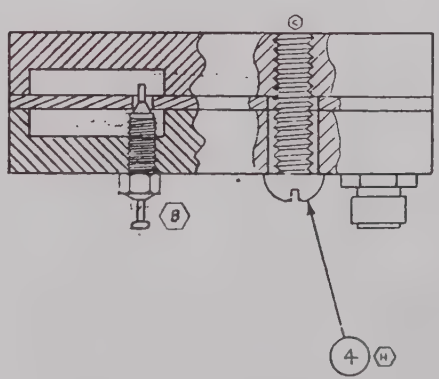
B
4
H

E F G H

DATE	REV	CHANGE	APVD
[illegible]	B	REVISED FEEDTHR & ADD LUG [illegible]	[illegible]
[illegible]	[illegible]	[illegible]	[illegible]
[illegible]	E	INC RC [illegible]	[illegible]
[illegible]	[illegible]	[illegible]	[illegible]
[illegible]	[illegible]	INC RC [illegible] 44	[illegible]
[illegible]	E	[illegible]	[illegible]
[illegible]	F	INC RC 3.34 [illegible]	[illegible]
[illegible] 86	G	INC RC 5793	[illegible]
[illegible]	H	INC RC [illegible]	[illegible]
[illegible]	J	INC ECN 9457 RS	[illegible]

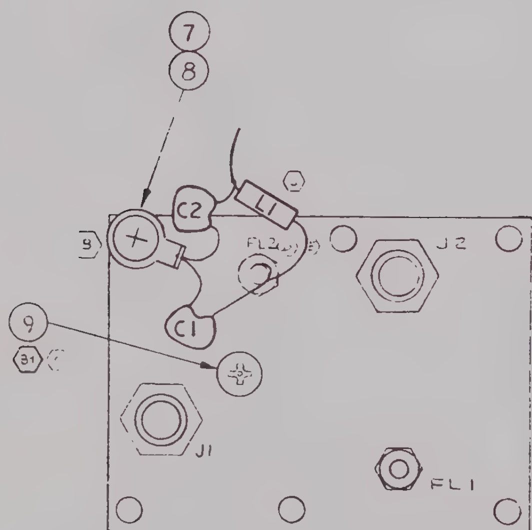

NOTES:

1. SOLDER ONE LEAD OF R5 DIRECTLY TO THE FEED THRU LEAD.

* ASSEMBLY NOTE:
MAKE SURE R5 IS IN A POSITION THAT WILL ALLOW THE ENCLOSURE TO SCREW TOGETHER.

DASH NO	REF DES SERIES	NEXT ASSY	MODEL
-900	37000	7005-4940-300	RD-301

APPLICATION

UNLESS OTHERWISE SPECIFIED. ALL DIMENSIONS APPLY AFTER FINISH
TOLERANCES:
DECIMALS: .xx ± .xxx ±
FRACTIONS ±
ANGLES ±
SURFACE FINISH:
REMOVE ALL BURRS
DO NOT SCALE THIS DRAWING

MATERIAL

FINISH

-IFR INC- 10200 West York Street Wichita, Kansas 67215

DRAWN: A. OSBURN	DATE: 10-11-84
CHECKED: M. Duffett	DATE: 10-25-84
APPROVED: Bill Young	DATE: 12-6-84

TITLE: MECH ASSY- MAIN DIODE SWITCH 49-409

SIZE	DWG. NO.	REV
C	7005-4940-900	J

SCALE 2:1 | CODE IDENT. 31180 | WEIGHT ~ | SHEET 1 OF 1

ASSY NO.	REVISION	DESCRIPTION	LAST ECN	DATE INC
7005-4940-900	J	MECH ASSY,MAIN DIODE SWITCH	10457	11/03/87

STAT	REF.DES.	QTY	COMP. PART NO.	DESCRIPTION	EFFECTIVE
ACT		.00	DWG-0000-4910-000	SCHEM,MAIN DIODE SWITCH	00/00/00
ACT	*01	1.00	1414-4950-900	COVER,BOTTOM,MAIN DIODE SWITCH	00/00/00
ACT	*02	1.00	7010-4930-000	PCB ASSY,MAIN DIODE SWITCH	00/00/00
ACT	*03	1.00	1414-4950-800	COVER,TOP,MAIN DIODE SWITCH	00/00/00
ACT	*04	1.00	2804-0625-006	SCREW,6-32 X 5/8 PPHM	00/00/00
ACT	*06	4.00	2803-0438-003	SCREW 4-40 X 7/16 PFHMS	00/00/00
ACT	*07	1.00	2850-0000-014	LUG,GND,4	00/00/00
ACT	*08	1.00	2803-0188-006	SCREW,4-40 X 3/16 PPHM	00/00/00
ACT	C37001	2.00	1506-0680-017	CAP,PF 68, 100V,NPO, 5	00/00/00
ACT	C37002	-.--	1506-0680-017	CAP,PF 68, 100V,NPO, 5	00/00/00
ACT	FL37001	1.00	5801-0000-006	FILTER,EMI/RFI 1500pF 8-32DIA*	00/00/00
ACT	FL37002	1.00	1526-0000-005	CAP,PF 10, 200V,FEEDTHRU	00/00/00
ACT	J37001	2.00	2123-0000-030	CONN,FSMA,W/TERM,STR BULKHEAD*	00/00/00
ACT	J37002	-.--	2123-0000-030	CONN,FSMA,W/TERM,STR BULKHEAD*	00/00/00
ACT	L37001	1.00	1801-0338-001	IND, .33UH,.2 OHM,1025-08	00/00/00

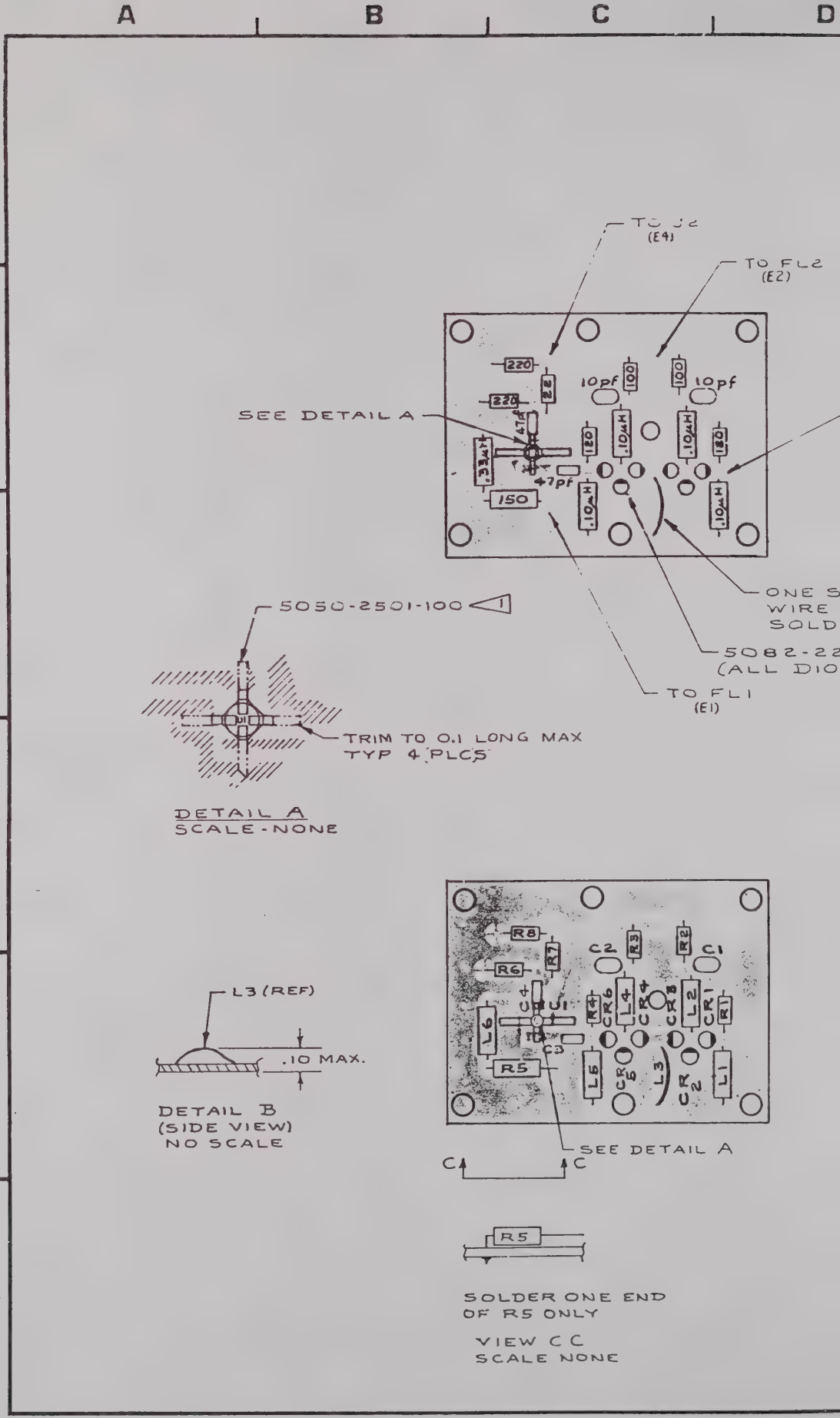
A
B
C
D
1
2
3
4
5
6
TO J2 (E4)
TO FL2 (E2)
SEE DETAIL A
220
22
10pf
100
.10μH
180
.33μH
47pf
150
ONE S
WIRE
SOLD
5082-22
(ALL DIO
TO FL1 (E1)
5050-2501-100
TRIM TO 0.1 LONG MAX TYP 4 PLCS
DETAIL A
SCALE-NONE
L3 (REF)
.10 MAX.
DETAIL B
(SIDE VIEW)
NO SCALE
R8
R7
R6
R5
R4
R3
R2
R1
C4
C3
C2
C1
CR6
CR4
CR3
CR1
CR5
CR2
L6
L4
L3
L2
L1
SEE DETAIL A
C
C
R5
SOLDER ONE END OF R5 ONLY
VIEW C C
SCALE NONE

E F G H

DATE	REV	CHANGE		APVD
10-24-84	B	PRODUCTION RELEASE-ECN6490		VH
2-8-85	C	INC ECN 6678	MTH	VH
5-2-85	C-1	INC ECN 7299	MKM	VLH
5-23-85	C-2	INC ECN 7703	VLH	SCR
10-1-85	C-3	INC ECN 7744	SCR	VLH
1-4-85	C-4	INC ECN 8134	DAH	OJ
4-9-86	C-5	INC ECN 8498	AO	
4-29-88	C-6	INC RC 10975A	AO	
11/9 88	C7	INC ECN 11434	PL	BP
9-26-90	C8	INC RC 13661	BP	

-TO J1
(E3)

RAND OF NO. 26 AWG
5" LONG BETWEEN
R PADS (SEE DETAIL B)

5 <1>
ES)

NOTES:

<1> THESE COMPONENTS ARE STATIC SENSITIVE AND SHOULD BE HANDLED IN A STATIC CONTROLLED AREA. REFER TO SPECIAL SOLDERING INSTRUCTIONS. THESE PARTS ARE HEAT SENSITIVE. APPLY HEAT (250°C, 482°F) FOR LESS THAN 2 SECONDS PER LEAD TO AVOID DEGRADATION. SOLDER ENTIRE LEAD UP TO BODY OF PART. DOT OR DIAGONALLY CUT LEAD INDICATES CATHODE.

PRODUCTION REL

DASH NO	HEP DES SERIES	NEXT ASSY	MODEL
		39000 7005-4940-900	RD-301

APPLICATION

UNLESS OTHERWISE SPECIFIED: ALL DIMENSIONS APPLY AFTER FINISH
TOLERANCES
DECIMALS .XX ± .01 — .XXX ± .005
FRACTIONS ±
ANGLES: ±
SURFACE FINISH √
REMOVE ALL BURRS
DO NOT SCALE THIS DRAWING

MATERIAL ~

FINISH ~

IFR INC- 10200 West York Street Wichita, Kansas 67215

DRAWN A. OSBURN	DATE 10-10-84	
CHECKED WB	DATE 10-12-84	
APPROVED Bill Young	DATE 10-17-84	

TITLE
PC BOARD ASSY.
MAIN DIODE SWITCH
49-300

SIZE	DWG. NO	REV
C	7010-4930-000	C8

SCALE	CODE IDENT.	WEIGHT	SHEET
2:1	51190		1 OF 1

ASSY NO.	REVISION	DESCRIPTION	LAST ECN	DATE INC
7010-4930-000	C8	PCB ASSY,MAIN DIODE SWITCH	13661	08/29/90

STAT	REF.DES.	QTY	COMP. PART NO.	DESCRIPTION	EFFECTIVE
ACT		.00	DWG-0000-4910-000	SCHEM,MAIN DIODE SWITCH	00/00/00
ACT	*01	1.00	1700-4920-000	PC BD,MAIN DIODE SWITCH	00/00/00
ACT	C39001	2.00	1506-0100-017	CAP,PF 10, 100V,NPO, 5	00/00/00
ACT	C39002	-.--	1506-0100-017	CAP,PF 10, 100V,NPO, 5	00/00/00
ACT	C39003	2.00	1523-0000-004	CAP,pF, 47, 50V,CHIP,NPO *	00/00/00
ACT	C39004	-.--	1523-0000-004	CAP,pF, 47, 50V,CHIP,NPO *	00/00/00
ACT	CR39001	6.00	4915-0501-100	DIODE,S BAR, 5082-2215	00/00/00
ACT	CR39002	-.--	4915-0501-100	DIODE,S BAR, 5082-2215	00/00/00
ACT	CR39003	-.--	4915-0501-100	DIODE,S BAR, 5082-2215	00/00/00
ACT	CR39004	-.--	4915-0501-100	DIODE,S BAR, 5082-2215	00/00/00
ACT	CR39005	-.--	4915-0501-100	DIODE,S BAR, 5082-2215	00/00/00
ACT	CR39006	-.--	4915-0501-100	DIODE,S BAR, 5082-2215	00/00/00
ACT	L39001	4.00	1801-0108-001	IND, .10UH,.080HM,1025-94	00/00/00
ACT	L39002	-.--	1801-0108-001	IND, .10UH,.080HM,1025-94	00/00/00
ACT	L39003	.00	0003-0000-000	***** FOR REFERENCE ONLY *****	00/00/00
ACT	L39004	-.--	1801-0108-001	IND, .10UH,.080HM,1025-94	00/00/00
ACT	L39005	-.--	1801-0108-001	IND, .10UH,.080HM,1025-94	00/00/00
ACT	L39006	1.00	1801-0688-001	IND, .68UH,.6 OHM,1025-16	00/00/00
ACT	R39001	2.00	4701-0121-003	RES, 5, 1/8W, 120 OHM	00/00/00
ACT	R39002	2.00	4701-0101-003	RES, 5, 1/8W, 100 OHM *	00/00/00
ACT	R39003	-.--	4701-0101-003	RES, 5, 1/8W, 100 OHM *	00/00/00
ACT	R39004	-.--	4701-0121-003	RES, 5, 1/8W, 120 OHM	00/00/00
ACT	R39005	1.00	4702-0151-003	RES, 5, 1/4W, 150 OHM	00/00/00
ACT	R39006	2.00	4701-0221-003	RES, 5, 1/8W, 220 OHM	00/00/00
ACT	R39007	1.00	4701-0220-003	RES,5, 1/8W 22 OHM *	00/00/00
ACT	R39008	-.--	4701-0221-003	RES, 5, 1/8W, 220 OHM	00/00/00

*** QTY OF REF. DESIG.

ASSY NO.	REVISION	DESCRIPTION	LAST ECN	DATE INC
7010-4930-000	C8	PCB ASSY,MAIN DIODE SWITCH	13661	08/29/90

STAT	REF.DES.	QTY	COMP. PART NO.	DESCRIPTION	EFFECTIVE
ACT	U39001	1.00	5050-2501-100	IC,MSA-0335-22,IC AMP	00/00/00

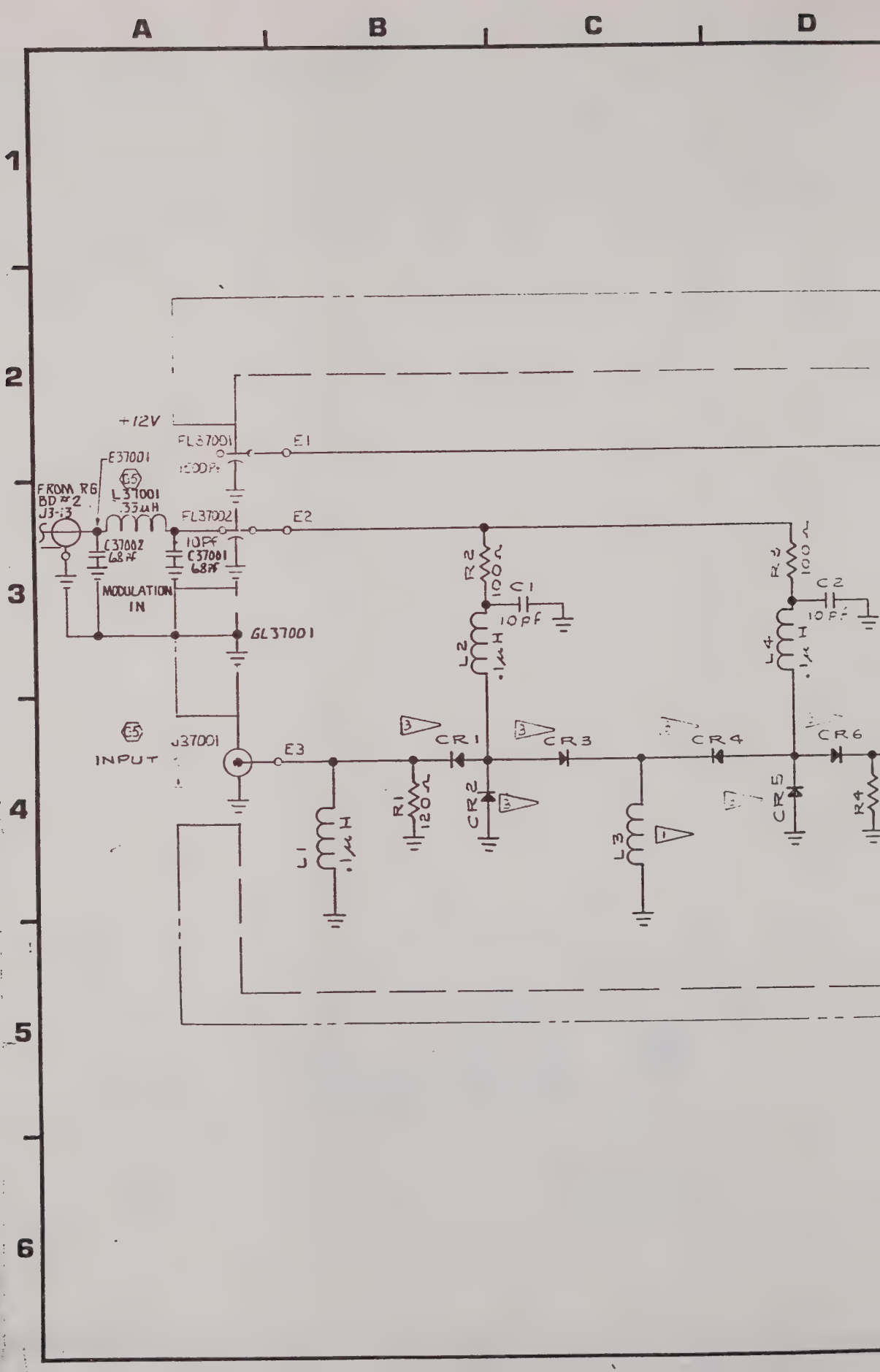

A
B
C
D
1
2
3
4
5
6
+12V
FL37001
E1
E37001
FROM RG
BD #2
J3-13
L37001
.33μH
FL37002
E2
C37002
68pf
10pf
C37001
68pf
MODULATION
IN
GL37001
R2
100Ω
C1
10pf
L2
.1μH
R3
100Ω
C2
10pf
L4
.1μH
INPUT
J37001
E3
CR1
CR3
CR4
CR6
R1
120Ω
CR2
CR5
R4
L1
.1μH
L3

DATE	REV	CHANGE		APVD
10-14-84	B	PRODUCTION RELEASE	ECN 6470	VH
[illegible]	C	INC ECN #6678	[illegible]	VH
[illegible]	C-1	INC RC 7744	[illegible]	[illegible]
[illegible]	C-2	[illegible]	[illegible]	[illegible]
[illegible]	C-3	[illegible]	[illegible]	VLH
1-4-86	C-4	INC RC 8168	[illegible]	[illegible]
[illegible]	C-5	INC RC 8134	DAH	OJ
11-10-87	C-6	INC ECN 10457A	RB	VLH
11-9-88	C7	INC ECN 11434	PL	[illegible]
9-26-90	C8	INC RC 13661	BP	TE

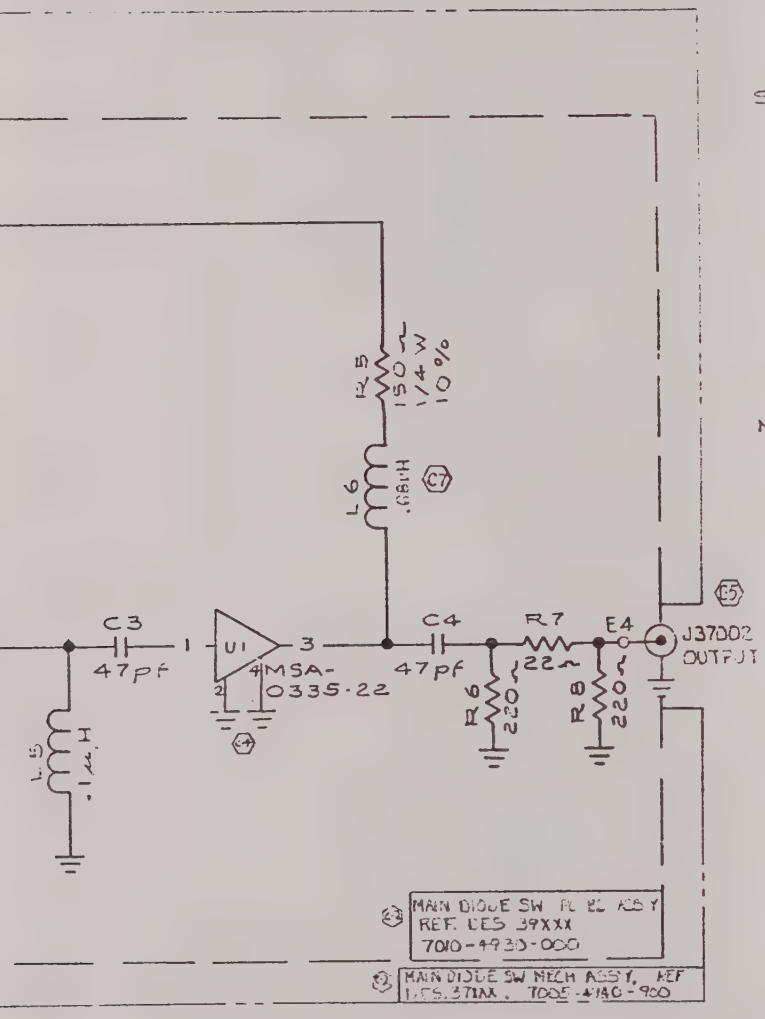

STANDARDS:
UNLESS OTHERWISE NOTED:

1. ALL REFERENCE NUMBERS CARRY AN ASSIGNED DES SERIES. THIS SCHEMATIC CARRIES SERIES 37XXX & 39000 (EG R1 IS R39001
2. ALL DIODES ARE 5082-2215

NOTES:

1. L3 IS A SINGLE STRAND FROM A 26GA STRANDED WIRE .50 LONG BETWEEN SOLDER JOINTS
2. LAST REF DES USED:
   C39004 J37002 R39008
   CR39006 L39006 U39001
   FL37002
3. CR1 THRU CR6 (HP-5082-2215) ARE SUBJECT TO DAMAGE DUE TO ELETROSTATIC CHARGES. PROPER PRECAUTIONS MUST BE USED WHEN HANDLING THESE DEVICES. A DOT OR DIAGONALLY CUT LEAD, INDICATES CATHODE.

DASH NO	REF DES SERIES	NEXT ASSY	MODEL
-000	39XXX	7010-4930-000	RD301

APPLICATION

UNLESS OTHERWISE SPECIFIED: ALL DIMENSIONS APPLY AFTER FINISH
TOLERANCES:
DECIMALS: .xx ± .xxx ±
FRACTIONS: ±
ANGLES: ±
SURFACE FINISH: √
REMOVE ALL BURRS
DO NOT SCALE THIS DRAWING

MATERIAL ~

FINISH ~

-IFR INC- 10200 West York Street Wichita, Kansas 67215

DRAWN M. OSBURN DATE 10-10-84
CHECKED VB DATE 10-12-84
APPROVED Bill Young DATE 10-18-84

TITLE MAIN DIODE SWITCH CIRCUIT SCHEMATIC 49-100

SIZE C DWG. NO. 0000-4910-000 REV C8

SCALE ~ CODE IDENT. 51190 WEIGHT ~ SHEET 1 OF 1

REVISIONS

	REV	DATE	DESCRIPTION	DRAWN BY	OK APP
	A	2-5-92	Production Rel. Per ECN 14369	B. Arnett	BA

CUSTOM ITEM DRAWING

	OK & APPROV FOR REV A LEVEL NAME		DATE	OK & APPROV REV A LEVEL NAME		DATE
	DRAWN BY	B. Arnett	9/13/91	SCDC	B. Arnett	9/13/91
	MECH CK	P COBB	9/18/91	APPROVED	M BACHMAN	9/18/91
	PURCH CK1			PURCH CK2		
	ELEC. CK	JIM UNRUH	9/18/91			
	Q A CK					

IFR SYSTEMS, IN

TITLE

X BAND FRONT END

FSCM 51190	SCALE NONE	REV A	DRAWING NO 2517-2511-700	SI 1

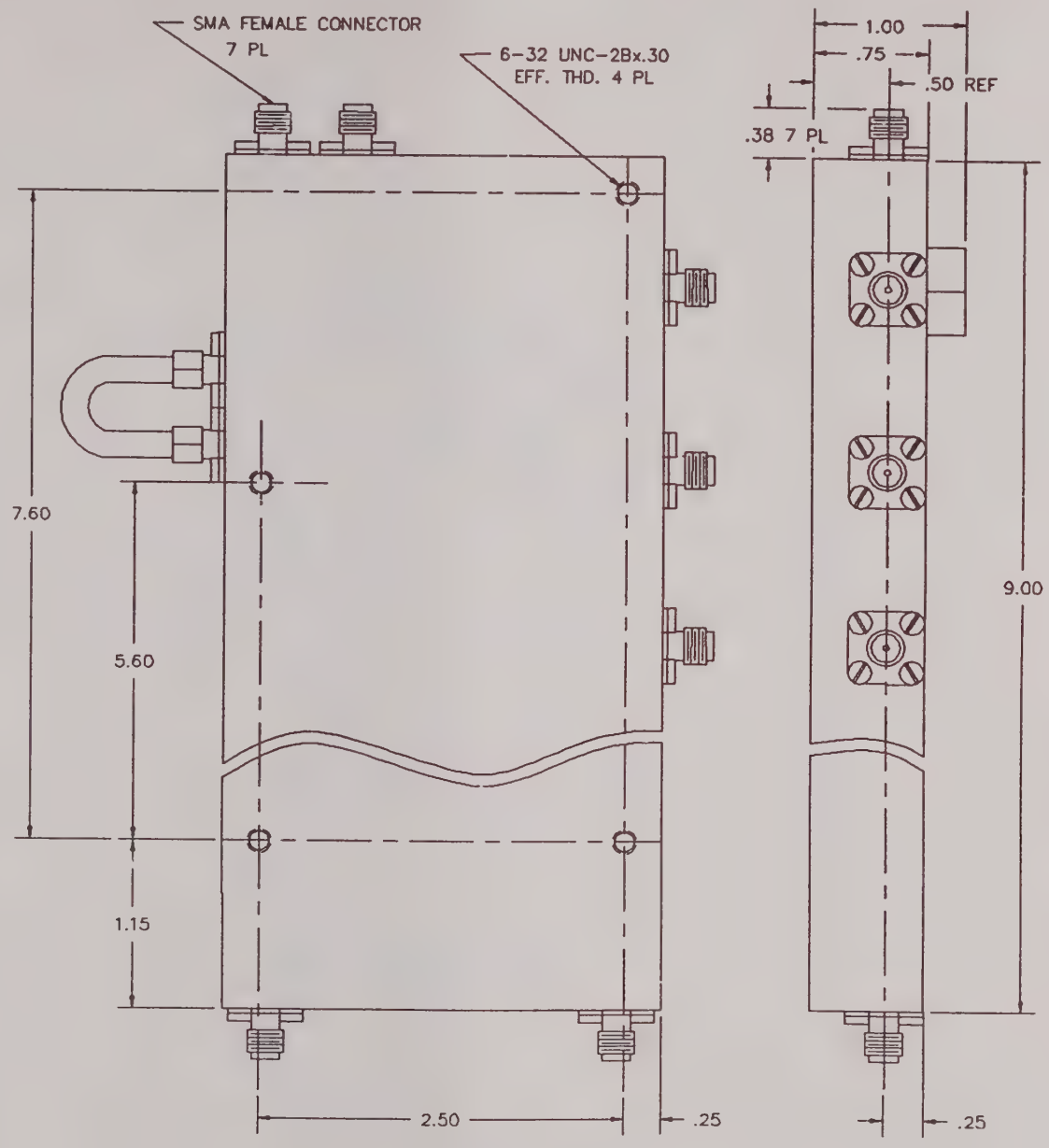

TOLERANCE: .XX = .02

CUSTOM ITEM DRAWING

IFR SYSTEMS, INC	FSCM 51190	REV A	DRAWING NO 2517-2511-700	SHEET 2 OF 6

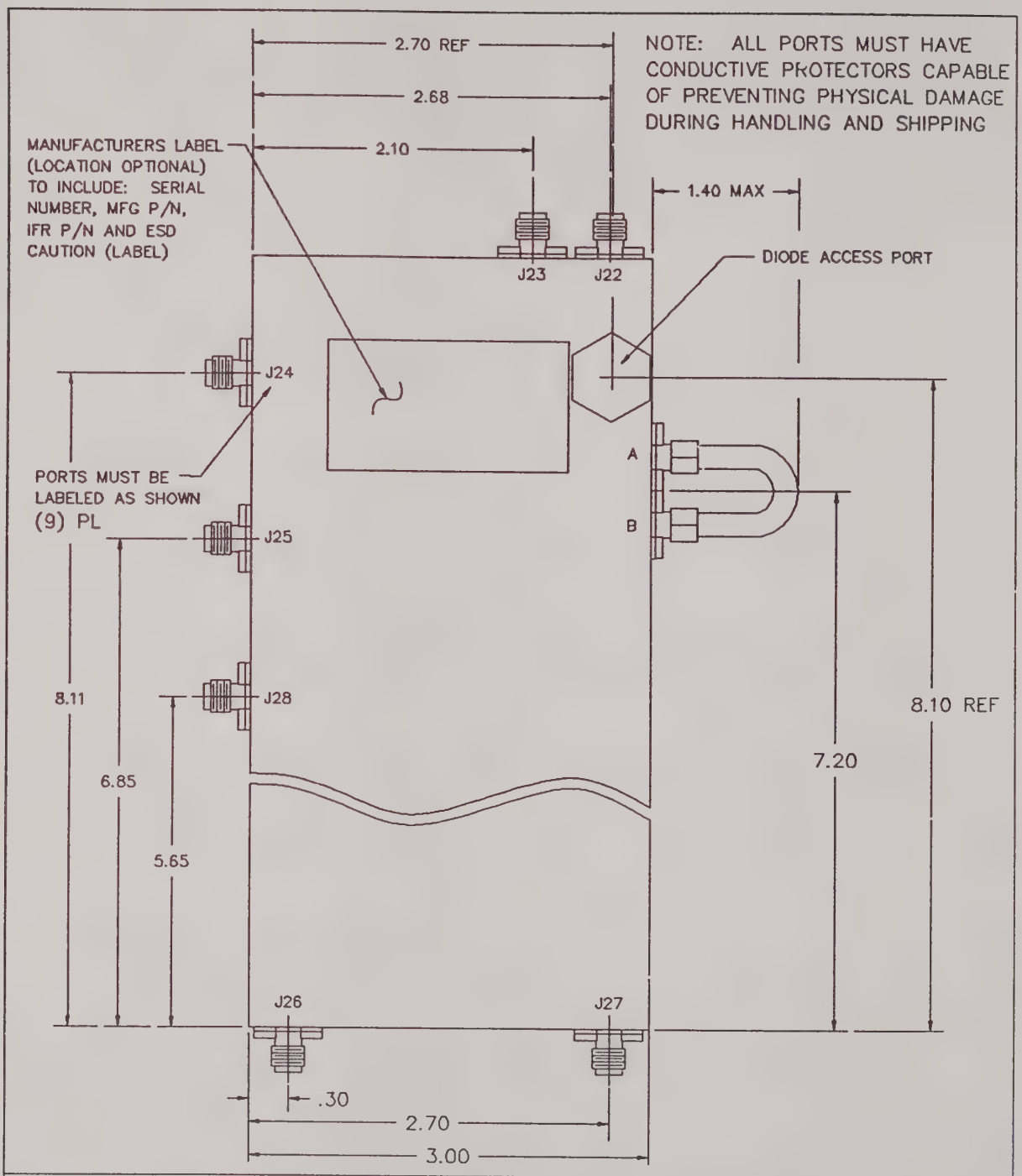

CUSTOM ITEM DRAWING

IFR SYSTEMS, INC	FSCM 51190	REV A	DRAWING NO 2517-2511-700	SHEET 3 OF 6

IFR SYSTEMS, INC

CUSTOM ITEM DRAWING

FSCM	REV	DRAWING NO	SHEET
51190	A	2517-2511-700	4 OF 6

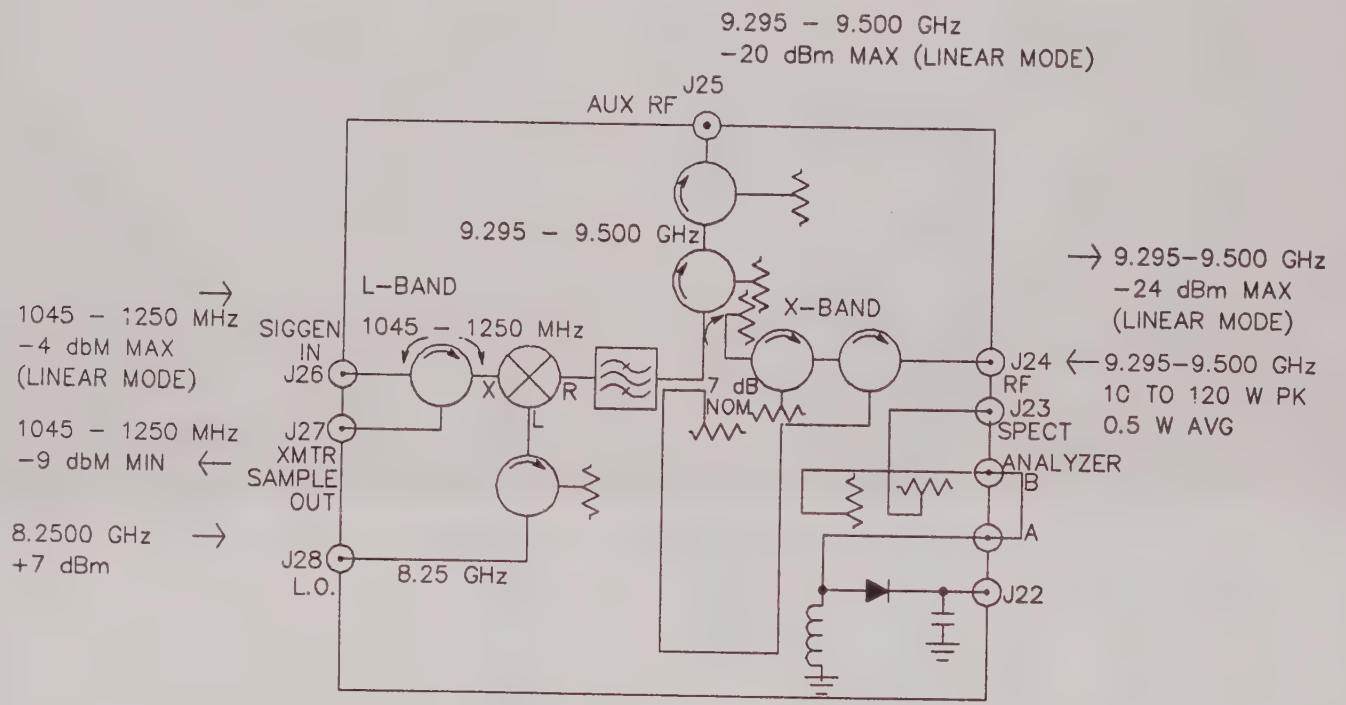

SCHEMATIC FOR REFERENCE ONLY
LEVELS SHOWN ARE TYPICAL

I. PORT 26
SIGNAL GENERATOR INPUT

A. PORT 26 – PORT 24 INSERTION LOSS		21.0 dB MAXIMUM
B. PORT 26 – PORT 25 INSERTION LOSS		16.0 dB MAXIMUM
C.	FREQUENCY SENSITIVITY	
L–BAND INPUT AT J–26 (MHz)	X–BAND OUTPUT AT J–24 (GHz)	SENSITIVITY (dB)
1045 – 1250	9.295 – 9.500	±.5

II. PORT 27
XMTR SAMPLE OUT

A. SATURATED PEAK POWER AT PORT 27 DUE TO 5 W TO 120 W PEAK PULSES AT PORT 24	–9 dBm MINIMUM

III. PORT 28
LOCAL OSCILLATOR INPUT

A. POWER	+7 dBm ±3 dB
B. FREQUENCY	8.250 GHz
C. PORT 28 VSWR	1.3:1 MAXIMUM

IV. PORT 25
AUXILIARY RF OUTPUT

A. VSWR (9.295 – 9.500 GHz)	1.5:1 MAXIMUM
B. RF INPUT POWER (AT PRF – 400 Hz, PULSE WIDTH =3.5 μS)	250 W PEAK MAXIMUM WITH NO DAMAGE TO UNIT

V. PORT 24

A. RF INPUT POWER(AT PRF – 400 Hz, PULSE WIDTH = 3.5 μS)	250 W PEAK MAXIMUM WITH NO DAMAGE TO UNIT
B. VSWR	1.4:1 MAXIMUM
C. PORT 26 – PORT 24 1 dB COMPRESSION POINT	–24 dBm MINIMUM

VI. PORT 23
SPECTRUM ANALYZER OUTPUT

A. INSERTION LOSS PORT 24 – PORT 23	62 ±6 dB
B. PORT 23 TO DETECTOR REVERSE ISOLATION*	14 dB MINIMUM

*NOTE: PORT WILL BE OPEN EXCEPT WHEN TEST SET OPERATOR IS USING A SPECTRUM ANALYZER. AN OPEN CIRCUIT SHOULD NOT INFLUENCE SIGNAL TO THE DETECTOR

CUSTOM ITEM DRAWING

IFR SYSTEMS, INC	FSCM 51190	REV A	DRAWING NO 2517–2511–700	SHEET 5 OF 6

V11. PORT 22
DETECTOR OUTPUT

A. PORT 24 – PORT 22 DETECTOR FLATNESS	FLAT WITHIN ±0.3 dB AT 9.295 – 9.500 GHz
B. LINEARITY PORT 24 TO PORT 22	±0.3 dB FROM 10 W TO 120 W AT J 24
C. PORT 22 OUTPUT VOLTAGE	1.1 TO 2.5 V WITH 20 W AT J 24

V111. MISCELLANEOUS

A. L. O. FEEDTHRU AT J 24	–38 dBm MAXIMUM
B. SPURIOUS OUTPUTS AT PORT 24 DUE TO –4 dBm SIGNAL AT PORT 26	–30 dBc MAXIMUM
1. PASSBAND IS 9.295 – 9.500 GHz. STOPBAND IS SUFFICIENT TO ATTENUATE L.O. FEEDTHRU AND THE IMAGE FREQUENCIES (7.0 TO 7.205 GHz)	
C. L–BAND CIRCULATOR ISOLATION PORT 26 – PORT 27 (1045 – 1250 MHz)	12 dB MINIMUM
D. CONNECTORS	SMA FEMALE
E. TEMPERATURE RANGE	0°C TO 50°C
F. L–BAND RFI ISOLATION, ANTENNA TO J24	–90 dBc

NOTE: 1. MANUFACTURER TO PROVIDE A COPY OF THEIR TEST PROCEEDURE TO IFR.

2. MANUFACTURER TO INCLUDE A COPY OF THE PRODUCTION TEST ACCEPTANCE DATA WITH EACH UNIT

CUSTOM ITEM DRAWING

IFR SYSTEMS, INC	FSCM 51190	REV A	DRAWING NO 2517–2511–700	SHEET 6 OF 6

VDR CODE	VENDOR NAME	PART NUMBER	APPR DATE	APPR BY
	MICROWAVE ASSOCIATES	MA87966		

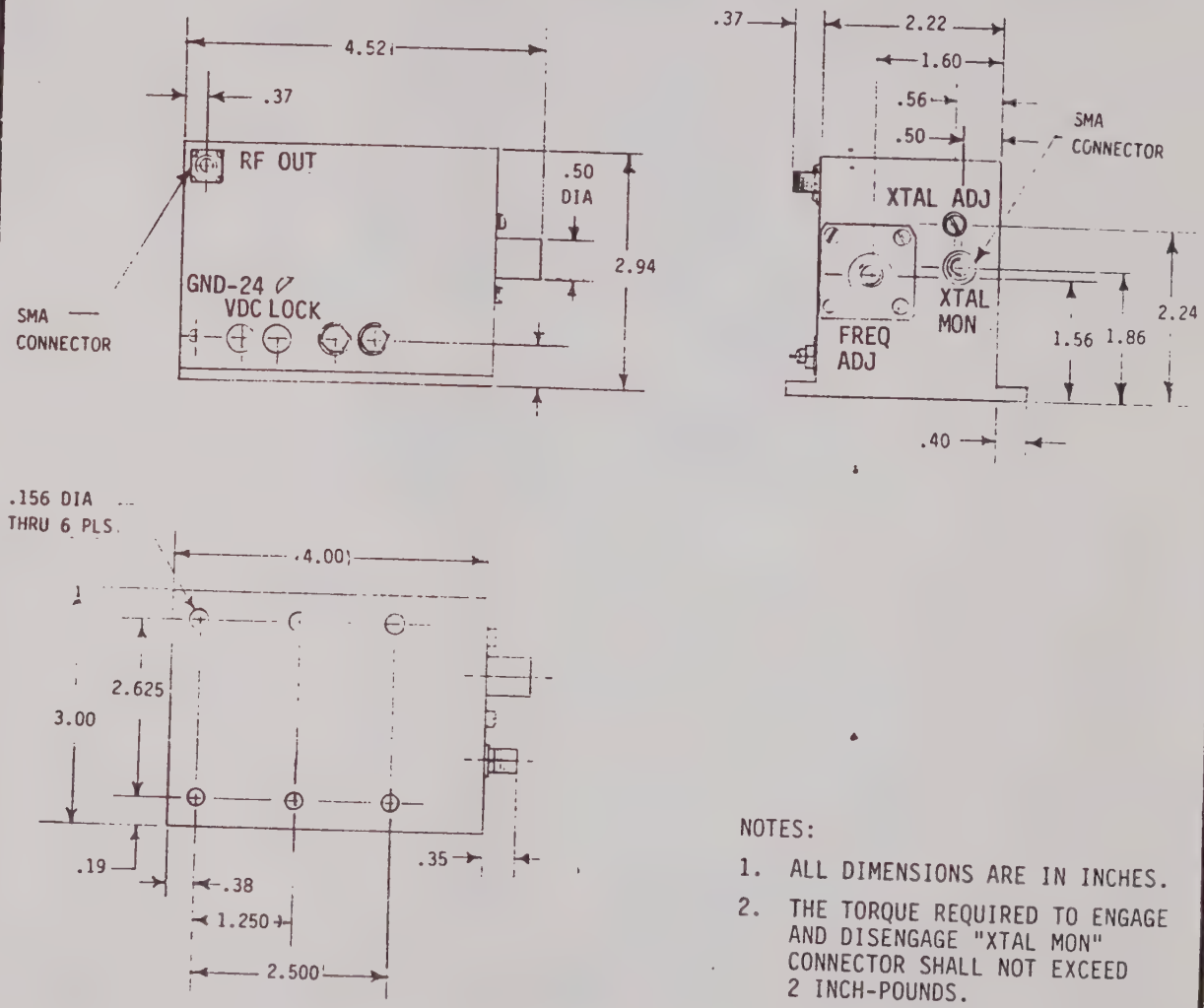

NOTES:

1. ALL DIMENSIONS ARE IN INCHES.
2. THE TORQUE REQUIRED TO ENGAGE AND DISENGAGE "XTAL MON" CONNECTOR SHALL NOT EXCEED 2 INCH-POUNDS.

SPECIFICATION CONTROL DRAWING

BY	DRAWN BY JC	- IFR INC - WICHITA, KANSAS	
DATE	DATE 7-30-81 VJD 4-8-82	TITLE OSCILLATOR, 8.250 GHz	
ECN	CHECKED BY KWF DATE 10-26-83		
REV	APPROVED BY DATE J Green 10-27-83	SIZE A	DRAWING NO 5850-8251-600 REV
		SCALE 1:2	WEIGHT — SHEET 1 OF 2

SPECIFICATIONS

FREQUENCY: 8.250 GHz

FREQUENCY STABILITY: ±0.002%

POWER OUTPUT: +7 DBM, ±3 DB

POWER INPUT: -24VDC @ 250 MA MAX

SPURIOUS SIGNAL OUTPUT: BELOW -75 DBC FROM 9.295 TO 9.425 GHz

RESIDUAL FM NOISE: (3 KHZ BANDWIDTH)---MAX:
30 Hz RMS @ 10 KHz OFFSET FROM CARRIER
15 Hz RMS @ 1 MHz OFFSET FROM CARRIER
30 Hz RMS @ 10 MHz OFFSET FROM CARRIER

SOURCE VSWR: 2.0:1 MAX FROM 7 TO 9.4 GHz

LOAD VSWR: 3.0:1 MAX

OPERATING TEMP RANGE: 0° C TO 50° C

ISOLATION FROM EXTERNAL RADIATION: 90DB

PHYSICAL DIMENSIONS: SEE DWG. (SCALE FOR UNSPECIFIED DIMENSIONS).

OUTPUT CONNECTORS: SMA FEMALE

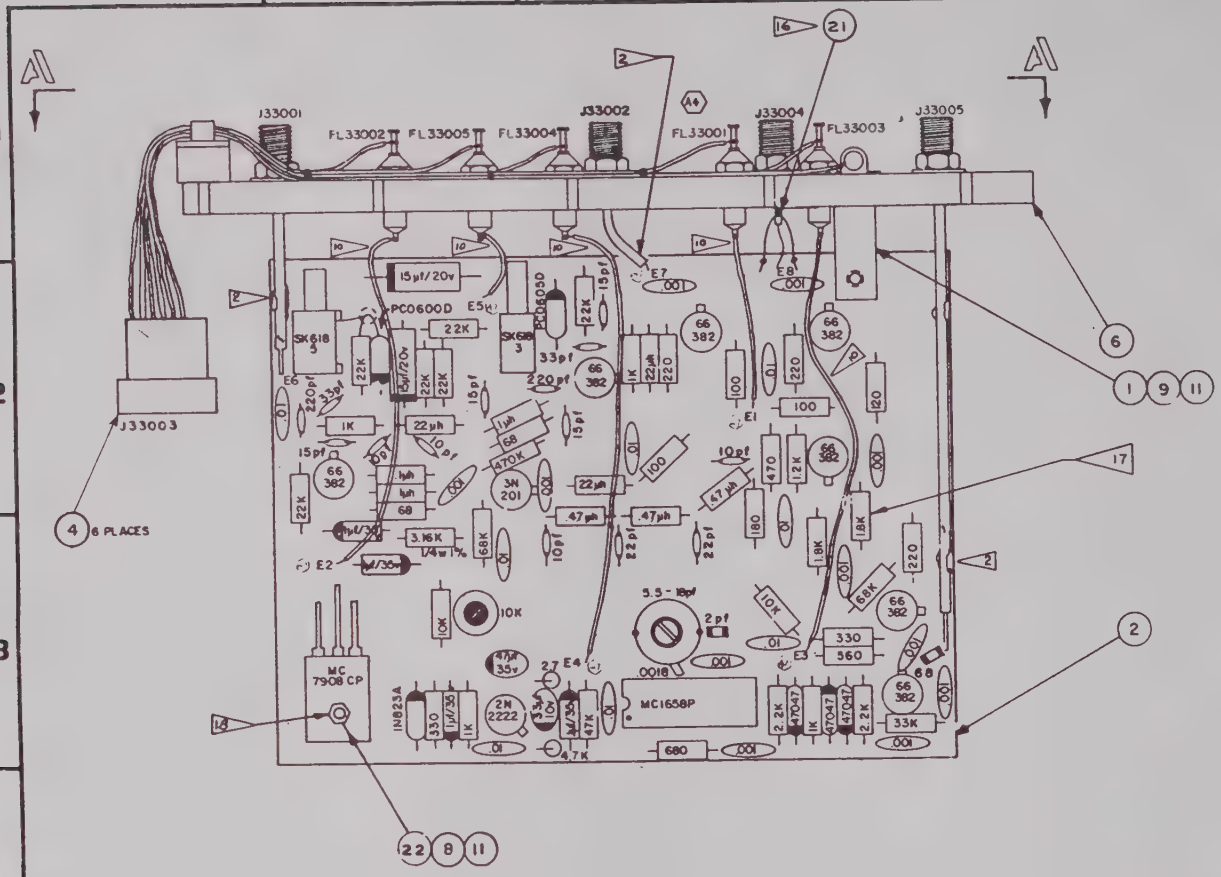

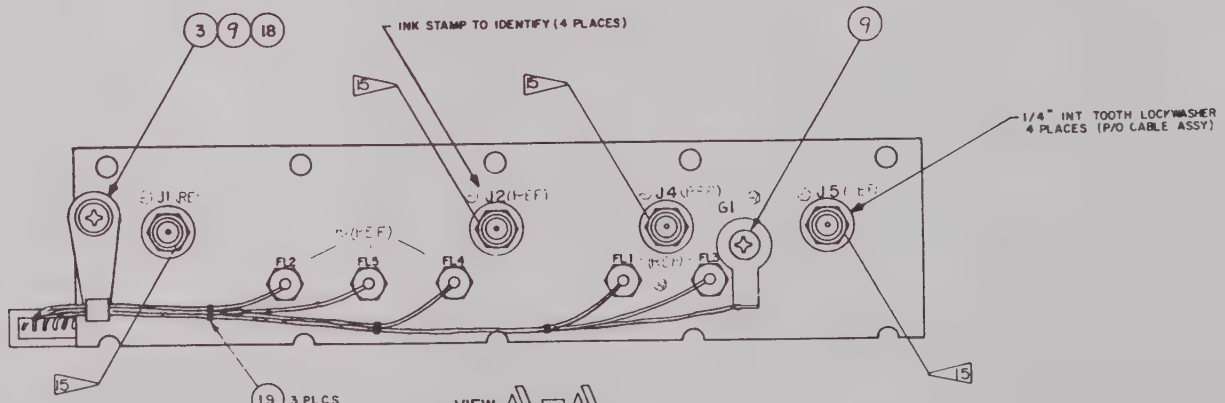

VIEW A1 - A1

WIRING LIST				
FROM	TO	COLOR	SIZE	LENGTH
J3-1	FL1	RED		5.5
J3-2	FL2	YELLOW		3.5
J3-3	FL5	WHITE		4
J3-4	FL4	BLUE		4.5
J3-5	FL3	GRAY		6
J3-6	gnd lug	BLACK		6.5

DETAIL D
SCALE - NONE
TYP FOR: C3 - C7
C11 - C14
C21 - C23
C24, C25

DATE	REV	CHANGE	APPD
5-1-88	B-1	INC ECN 11081	AO VLH
6-8-88	B-2	INC RC 11208	JR BP
8/12/88	B-3	INC RC 11495	AO BP
9/7/88	B-4	INC ECN 13134	AO BP
11-3-89	B-5	INC ECN 13637 R&S	AO BP
11-7-89	B-6	INC RC 13747	AO BP
11-7-89	B-7	INC RC13807	AO BP

DAT				
7/17/91		B/N 42,C,R - PLEASE! DO NOT REMOVE!		VH
4-9-92				VLH
7/1/93				DS
8/24/94	A3	INC RC 7307	AO	DS
7/13/95	A-4	INC RC 7656	BA	VLH
5/24/96	A-5	INC RC 7696	VLH	VLR
9/23/96	A-6	INC RC 7697		
7/1/96	A-7	INC R. 3077 NL 8212	DAH	DS
7/1/96	A-8	INC ECN 8464	DAH	VLH
3/24/97	A-9	INC RC 9669	BB	VLH
3/88	B	INC ECN 10890	AO	VLH

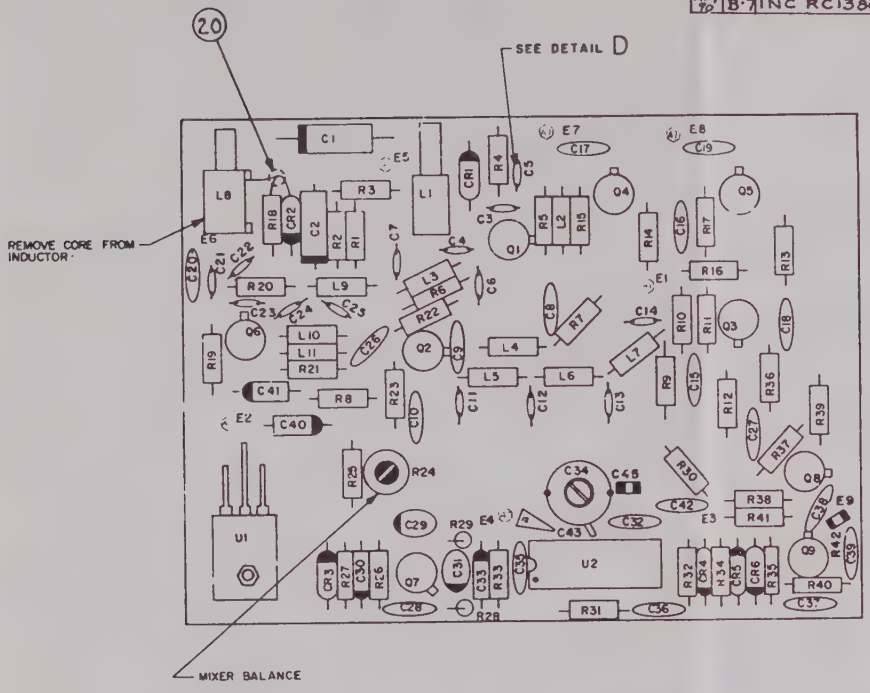

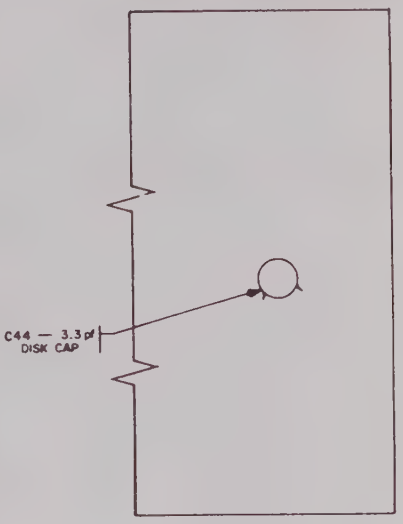

BOTTOM SIDE PC BD

NOTE

1. REFER TO ASSY PROCEDURE Nº 1-34-0100-2 FOR PROPER RIGID COAX ASSY INSTRUCTIONS. INSPECT PER CHECKOUT PROCEDURE LISTED BELOW.
2. ATTACH RIGID COAX ASSY'S TO PC BD AS FOLLOWS:
   a. LIGHTLY SAND OUTER JACKET OF COAX WITH 400 GRIT SANDPAPER TO REMOVE OXIDATION AND OTHER CONTAMINATES.
   b. SOLDER COAX JACKET TO PC BD USING NO MORE THAN ABOUT A 40w SOLDERING IRON AND HEAT COAX FOR AS SHORT A PERIOD OF TIME AS POSSIBLE. LIQUID FLUX MAY BE USED IF NECESSARY. (DO NOT USE SOLDERING PASTE)
3. ALL RESISTORS ARE 1/4w, 5% TOL., UNLESS OTHERWISE SPECIFIED.
4. ALL CAPACITORS ARE IN µf UNLESS OTHERWISE SPECIFIED.
5. COMPONENT LEADS MAY EXTEND .04 - .06 BEYOND BOTTOM OF BOARD AFTER SOLDERING.
6. MAX HT OF COMPONENTS TO BE .60 FROM COMPONENT SIDE OF BOARD.
7. SCHEMATIC DWG Nº 0000-4911-400
8. P.C. BOARD P/N 1700-2507-100
9. REFERENCE DESIGNATOR SERIES FOR COMPONENTS ON THIS DWG IS 33XXX (i.e. R11 = R33011; CR2 = CR33002; etc.)
10. ALL ANNOTATED WIRE LENGTHS TO BE 26awg (6003-0000-010).
11. ALL ANNOTATED WIRE LENGTHS TO BE 26 awg TEFLON COVERED WIRE
12. C43 CONNECTS FROM PIN 13 OF U2 TO GND.
13. LAST REF NO'S USED: J33005, C45, U2, L11, CR6, R42, Q9, FL5, GL1
15. TORQUE TO 15 INCH LBS., J1, J2, J4, J5.
16. SHAPE GROUND STRAP FROM .6" 22GA BUSS WIRE, DPN 1050-0000-073, ITEM NO. 21. SOLDER 3 PLCS.

ECKOUT PROCEDURES

CHECK FOR PROPER COAX CONTINUITY AFTER COMPLETION OF THE BOARD AS FOLLOWS:

1. USE A "MIDLAND" VOM MODEL 23-107 OR EQUIVALENT.
2. SELECT THE "Rx1" SCALE SETTING ON THE METER & CHECK TO SEE THAT THE METER IS PROPERLY ZEROED AT BOTH ENDS OF THE SCALE.
3. PLACE THE POSITIVE (RED) LEAD ON THE CENTER CONDUCTOR OF THE CONNECTOR & THE COMMON (BLACK) LEAD ON THE CENTER CONDUCTOR OF THE COAX WHERE IT ENTERS THE BOARD. THIS SHOULD OBTAIN A READING OF 0 OHMS ON BOTH COAX CABLES.
4. PLACE THE POSITIVE (RED) LEAD ON THE CENTER CONDUCTOR OF THE CONNECTOR & THE COMMON (BLACK) LEAD ON THE LARGE COPPER AREA ON TOP OF THE BOARD (GROUND). THIS SHOULD OBTAIN NO READING AT ALL ON BOTH COAX CABLES

.NOTE (cont.)

17. R36 IS SELECTED AT TEST (S.A.T.) COMPONENT. NOMINAL VALUE: 8.2K, RANGE VALUE: 4.7K-12K
18. INSTALL ITEM 22 FROM BOTTOM OF BOARD.

DASH NO	REF DES SERIES	NEXT ASSY	MODEL
-400	3XXXX	7003-4940-000	RD 301 (44)

APPLICATION

-IFR INC-

DRAWN L A Mars, Jr	30 NOV 84	TITLE: PC BOARD ASSEMBLY IF MARKER/OSCILLATOR RD 301
CHECKED	1-11-85	
APPROVED	1-14-85	DWG NO 7010-4931-400 REV D
SCALE 2:1		SIZE B

B-7

SHEET 1 OF 1

14

ASSY NO.	REVISION	DESCRIPTION	LAST ECN	DATE INC
7010-4931-400	B7	PCB ASSY,IF MKR/OSC,RO-301	13807	11/06/90

STAT	REF.DES.	QTY	COMP. PART NO.	DESCRIPTION	EFFECTIVE
ACT		.54	6003-0000-001	WIRE,HOOK,TFE,26GA, 7S,BLACK	00/00/00
ACT		.46	6003-0000-003	WIRE,HOOK,TFE,26GA, 7S,RED	00/00/00
ACT		.33	6003-0000-005	WIRE,HOOK,TFE,26GA, 7S,YELLOW	00/00/00
ACT		.38	6003-0000-007	WIRE,HOOK,TFE,26GA, 7S,BLUE	00/00/00
ACT		.50	6003-0000-009	WIRE,HOOK,TFE,26GA, 7S,GRAY	00/00/00
ACT		1.10	6003-0000-010	WIRE,HOOK,TFE,26GA, 7S,WHITE	00/00/00
ACT		.00	DWG-0000-4911-400	DWG SCHEM,IF MARKER/OSCILLATOR	00/00/00
ACT	*01	1.00	1400-2516-400	BRACKET MOUNTING 1	00/00/00
ACT	*02	1.00	1700-2507-100	BD PC 1	00/00/00
ACT	*03	1.00	2109-0000-007	CLAMP CABLE TYRAP TY34M.8	00/00/00
ACT	*04	6.00	2114-9001-001	CONTACT PIN26-22GA.SYM001T0.6*	00/00/00
ACT	*06	1.00	2506-2515-600	PLATE MOUNTING 2	00/00/00
ACT	*08	1.00	2850-0000-020	NUT,HEX,SMALL PAT,4-40	00/00/00
ACT	*09	3.00	2803-0313-006	SCREW,4-40 X 5/16 PPHM	00/00/00
ACT	*11	2.00	2840-0000-003	WASHER,LOCK,INT TOOTH,4	00/00/00
ACT	*18	1.00	2840-0000-008	WASHER,FLAT,4,AN960-C4	00/00/00
ACT	*19	3.00	6004-6005-400	TY-RAP,4.0 LG	00/00/00
ACT	*20	1.00	2813-0000-005	TERM,INSUL,STANDOFF,.148DIA	00/00/00
ACT	*21	.00	1050-0000-073	WIRE,BUS,TINNED COPPER,22GA	00/00/00
ACT	*22	1.00	2803-0250-006	SCREW,4-40 X 1/4 PPHM	00/00/00
ACT	C33001	2.00	1507-0156-021	CAP,UF 15, 20V,TANT, 20	00/00/00
ACT	C33002	-.--	1507-0156-021	CAP,UF 15, 20V,TANT, 20	00/00/00
ACT	C33003	2.00	1506-0330-017	CAP,PF 33, 100V,NPO 5	00/00/00
ACT	C33004	2.00	1506-0221-017	CAP,pF 220, 100V,NPO, 5 *	00/00/00
ACT	C33005	4.00	1506-0150-017	CAP,PF 15, 100V,NPO 5 *	00/00/00
ACT	C33006	-.--	1506-0150-017	CAP,PF 15, 100V,NPO 5 *	00/00/00

ASSY NO.	REVISION	DESCRIPTION	LAST ECN	DATE INC
7010-4931-400	B7	PCB ASSY,IF MKR/OSC,RD-301	13807	11/06/90

STAT	REF.DES.	QTY	COMP. PART NO.	DESCRIPTION	EFFECTIVE
ACT	C33007	-.--	1506-0150-017	CAP,PF 15, 100V,NPO 5 *	00/00/00
ACT	C33008	8.00	1501-0103-005	CAP,UF .010, 50V,DISC, 10	00/00/00
ACT	C33009	11.00	1501-0102-001	CAP,PF 1000, 600V,DISC, 10	00/00/00
ACT	C33010	-.--	1501-0103-005	CAP,UF .010, 50V,DISC, 10	00/00/00
ACT	C33011	4.00	1506-0100-017	CAP,PF 10, 100V,NPO, 5	00/00/00
ACT	C33012	2.00	1506-0220-017	CAP,PF 22, 100V,NPO, 5	00/00/00
ACT	C33013	-.--	1506-0220-017	CAP,PF 22, 100V,NPO, 5	00/00/00
ACT	C33014	-.--	1506-0100-017	CAP,PF 10, 100V,NPO, 5	00/00/00
ACT	C33015	-.--	1501-0103-005	CAP,UF .010, 50V,DISC, 10	00/00/00
ACT	C33016	-.--	1501-0103-005	CAP,UF .010, 50V,DISC, 10	00/00/00
ACT	C33017	-.--	1501-0102-001	CAP,PF 1000, 600V,DISC, 10	00/00/00
ACT	C33018	-.--	1501-0102-001	CAP,PF 1000, 600V,DISC, 10	00/00/00
ACT	C33019	-.--	1501-0102-001	CAP,PF 1000, 600V,DISC, 10	00/00/00
ACT	C33020	-.--	1501-0103-005	CAP,UF .010, 50V,DISC, 10	00/00/00
ACT	C33021	-.--	1506-0221-017	CAP,pF 220, 100V,NPO, 5 *	00/00/00
ACT	C33022	-.--	1506-0330-017	CAP,PF 33, 100V,NPO 5	00/00/00
ACT	C33023	-.--	1506-0150-017	CAP,PF 15, 100V,NPO 5 *	00/00/00
ACT	C33024	-.--	1506-0100-017	CAP,PF 10, 100V,NPO, 5	00/00/00
ACT	C33025	-.--	1506-0100-017	CAP,PF 10, 100V,NPO, 5	00/00/00
ACT	C33026	-.--	1501-0102-001	CAP,PF 1000, 600V,DISC, 10	00/00/00
ACT	C33027	-.--	1501-0102-001	CAP,PF 1000, 600V,DISC, 10	00/00/00
ACT	C33028	-.--	1501-0103-005	CAP,UF .010, 50V,DISC, 10	00/00/00
ACT	C33029	1.00	1508-0476-018	CAP,uF 47, 35V,TANT,RDL *	00/00/00
ACT	C33030	2.00	1507-0104-018	CAP,uF .10, 35V,TANT, 20 *	00/00/00
ACT	C33031	1.00	1508-0336-023	CAP,UF 33, 10V,TANT,RDL	00/00/00
ACT	C33032	-.--	1501-0102-001	CAP,PF 1000, 600V,DISC, 10	00/00/00

ASSY NO.	REVISION	DESCRIPTION	LAST ECN	DATE INC
7010-4931-400	B7	PCB ASSY,IF MKR/OSC,RD-301	13807	11/06/90

STAT	REF.DES.	QTY	COMP. PART NO.	DESCRIPTION	EFFECTIVE
ACT	C33033	-.--	1507-0104-018	CAP,uF .10, 35V,TANT, 20 *	00/00/00
ACT	C33034	1.00	1521-0000-002	CAP,VAR, 5.5-18PF,350V,VPCM	00/00/00
ACT	C33035	-.--	1501-0103-005	CAP,UF .010, 50V,DISC, 10	00/00/00
ACT	C33036	-.--	1501-0102-001	CAP,PF 1000, 600V,DISC, 10	00/00/00
ACT	C33037	-.--	1501-0102-001	CAP,PF 1000, 600V,DISC, 10	00/00/00
ACT	C33038	-.--	1501-0102-001	CAP,PF 1000, 600V,DISC, 10	00/00/00
ACT	C33039	-.--	1501-0102-001	CAP,PF 1000, 600V,DISC, 10	00/00/00
ACT	C33040	2.00	1507-0105-018	CAP,uF 1.0, 35V,TANT, 20 *	00/00/00
ACT	C33041	-.--	1507-0105-018	CAP,uF 1.0, 35V,TANT, 20 *	00/00/00
ACT	C33042	-.--	1501-0103-005	CAP,UF .010, 50V,DISC, 10	00/00/00
ACT	C33043	1.00	1523-0000-002	CAP,PF 1800, 50V,CHIP,X7R	00/00/00
ACT	C33044	1.00	1501-0339-001	CAP,PF 3.3, 600V,NPO,DISC	00/00/00
ACT	C33045	1.00	1622-0020-001	CAP, PF 2.0, 50V CHIP *	00/00/00
ACT	CR33001	1.00	4826-0000-002	DIODE,PC0605D ,VARC, 47PF/-4V	00/00/00
ACT	CR33002	1.00	4825-0000-003	DIODE,PC0600D ,VARC, 7PF/-4V	00/00/00
ACT	CR33003	1.00	4814-0000-001	DIODE, 1N823A ,REF,6.2V/7.5MA	00/00/00
ACT	CR33004	3.00	4828-0000-002	DIODE,PIN,.3 PF,100 NS	00/00/00
ACT	CR33005	-.--	4828-0000-002	DIODE,PIN,.3 PF,100 NS	00/00/00
ACT	CR33006	-.--	4828-0000-002	DIODE,PIN,.3 PF,100 NS	00/00/00
ACT	FL33001	5.00	5801-0000-006	FILTER,EMI/RFI 1500pF 8-32DIA*	00/00/00
ACT	FL33002	-.--	5801-0000-006	FILTER,EMI/RFI 1500pF 8-32DIA*	00/00/00
ACT	FL33003	-.--	5801-0000-006	FILTER,EMI/RFI 1500pF 8-32DIA*	00/00/00
ACT	FL33004	-.--	5801-0000-006	FILTER,EMI/RFI 1500pF 8-32DIA*	00/00/00
ACT	FL33005	-.--	5801-0000-006	FILTER,EMI/RFI 1500pF 8-32DIA*	00/00/00
ACT	G33001	1.00	2850-0000-031	LUG,GND,4	00/00/00
ACT	J33001	1.00	6042-0016-704	COAX ASSY,086,IF/MARKER OSC BD	00/00/00

ASSY NO.	REVISION	DESCRIPTION	LAST ECN	DATE INC
7010-4931-400	B7	PCB ASSY,IF MKR/OSC,RO-301	13807	11/06/90

STAT	REF.DES.	QTY	COMP. PART NO.	DESCRIPTION	EFFECTIVE
ACT	J33002	1.00	6042-4983-500	COAX ASSY,SR.086,IF MRKER .10L	00/00/00
ACT	J33003	1.00	2115-9001-008	CONN,RECT.098 RCPT 8-P,SMR08VB	00/00/00
ACT	J33004	1.00	6042-0016-701	COAX ASSY,086,IF/MARKER OSC BD	00/00/00
ACT	J33005	1.00	6042-0016-709	COAX ASSY,086,IF/MARKER OSC BD	00/00/00
ACT	L33001	1.00	1804-0000-010	IND,VAR, .061-.101UH,YEL 618	00/00/00
ACT	L33002	3.00	1801-0022-001	IND, 22uH 3.3 OHM 1025-52 *	00/00/00
ACT	L33003	3.00	1801-0108-001	IND, .10UH,.080HM,1025-94	00/00/00
ACT	L33004	-.--	1801-0022-001	IND, 22uH 3.3 OHM 1025-52 *	00/00/00
ACT	L33005	3.00	1801-0478-001	IND, .47UH,.350HM,1025-12	00/00/00
ACT	L33006	-.--	1801-0478-001	IND, .47UH,.350HM,1025-12	00/00/00
ACT	L33007	-.--	1801-0478-001	IND, .47UH,.350HM,1025-12	00/00/00
ACT	L33008	1.00	1804-0000-013	IND,VAR, .125-.243UH,VIO 618	00/00/00
ACT	L33009	-.--	1801-0022-001	IND, 22uH 3.3 OHM 1025-52 *	00/00/00
ACT	L33010	-.--	1801-0108-001	IND, .10UH,.080HM,1025-94	00/00/00
ACT	L33011	-.--	1801-0108-001	IND, .10UH,.080HM,1025-94	00/00/00
ACT	Q33001	7.00	4809-0100-100	TRANS,55100 NPN HF AMP *	00/00/00
ACT	Q33002	1.00	4813-0000-001	TRANS, 3N201 ,N-CH MOSFET	00/00/00
ACT	Q33003	-.--	4809-0100-100	TRANS,55100 NPN HF AMP *	00/00/00
ACT	Q33004	-.--	4809-0100-100	TRANS,55100 NPN HF AMP *	00/00/00
ACT	Q33005	-.--	4809-0100-100	TRANS,55100 NPN HF AMP *	00/00/00
ACT	Q33006	-.--	4809-0100-100	TRANS,55100 NPN HF AMP *	00/00/00
ACT	Q33007	1.00	4801-0000-001	TRANSISTOR NPN HS SW *	00/00/00
ACT	Q33008	-.--	4809-0100-100	TRANS,55100 NPN HF AMP *	00/00/00
ACT	Q33009	-.--	4809-0100-100	TRANS,55100 NPN HF AMP *	00/00/00
ACT	R33001	6.00	4702-0223-003	RES, 5%, 1/4W 22K OHM *	00/00/00
ACT	R33002	-.--	4702-0223-003	RES, 5%, 1/4W 22K OHM *	00/00/00

ASSY NO.	REVISION	DESCRIPTION	LAST ECN	DATE INC
7010-4931-400	B7	PCB ASSY,IF MKR/OSC,RD-301	13807	11/06/90

STAT	REF.DES.	QTY	COMP. PART NO.	DESCRIPTION			EFFECTIVE
ACT	R33003	-.--	4702-0223-003	RES, 5%, 1/4W	22K OHM	*	00/00/00
ACT	R33004	-.--	4702-0223-003	RES, 5%, 1/4W	22K OHM	*	00/00/00
ACT	R33005	4.00	4702-0102-003	RES, 5, 1/4W,	1.0K OHM		00/00/00
ACT	R33006	2.00	4702-0680-003	RES, 5%, 1/4W,	68 OHM	*	00/00/00
ACT	R33007	3.00	4702-0101-003	RES, 5, 1/4W,	100 OHM		00/00/00
ACT	R33008	1.00	4706-3161-001	RES, 1, 1/4W,	3.16K OHM		00/00/00
ACT	R33009	1.00	4702-0181-003	RES, 5, 1/4W,	180 OHM		00/00/00
ACT	R33010	1.00	4702-0471-003	RES, 5, 1/4W,	470 OHM		00/00/00
ACT	R33011	1.00	4702-0122-003	RES, 5, 1/4W,	1.2K OHM		00/00/00
ACT	R33012	1.00	4702-0182-003	RES, 5, 1/4W,	1.8K OHM		00/00/00
ACT	R33013	1.00	4702-0121-003	RES, 5, 1/4W,	120 OHM		00/00/00
ACT	R33014	-.--	4702-0101-003	RES, 5, 1/4W,	100 OHM		00/00/00
ACT	R33015	3.00	4702-0221-003	RES, 5, 1/4W 220 OHM		*	00/00/00
ACT	R33016	-.--	4702-0101-003	RES, 5, 1/4W,	100 OHM		00/00/00
ACT	R33017	-.--	4702-0221-003	RES, 5, 1/4W 220 OHM		*	00/00/00
ACT	R33018	-.--	4702-0223-003	RES, 5%, 1/4W	22K OHM	*	00/00/00
ACT	R33019	-.--	4702-0223-003	RES, 5%, 1/4W	22K OHM	*	00/00/00
ACT	R33020	-.--	4702-0102-003	RES, 5, 1/4W,	1.0K OHM		00/00/00
ACT	R33021	-.--	4702-0680-003	RES, 5%, 1/4W,	68 OHM	*	00/00/00
ACT	R33022	1.00	4702-0474-003	RES, 5, 1/4W,	470K OHM		00/00/00
ACT	R33023	2.00	4702-0683-003	RES, 5%, 1/4W	68K OHM	*	00/00/00
ACT	R33024	1.00	4752-0103-002	POT 10K OHM			00/00/00
ACT	R33025	2.00	4702-0103-003	RES,5, 1/4W	10K OHM	*	00/00/00
ACT	R33026	-.--	4702-0102-003	RES, 5, 1/4W,	1.0K OHM		00/00/00
ACT	R33027	2.00	4702-0331-003	RES, 5%, 1/4W	330 OHM	*	00/00/00
ACT	R33028	1.00	4702-0472-003	RES, 5, 1/4W,	4.7K OHM		00/00/00

ASSY NO.	REVISION	DESCRIPTION	LAST ECN	DATE INC
7010-4931-400	B7	PCB ASSY,IF MKR/OSC,RD-301	13807	11/06/90

STAT	REF.DES.	QTY	COMP. PART NO.	DESCRIPTION			EFFECTIVE
ACT	R33029	1.00	4702-0279-003	RES, 5, 1/4W,	2.7	OHM	00/00/00
ACT	R33030	-.--	4702-0103-003	RES,5, 1/4W	10K OHM	*	00/00/00
ACT	R33031	1.00	4702-0681-003	RES, 5, 1/4W,	680	OHM	00/00/00
ACT	R33032	2.00	4702-0222-003	RES, 5%, 1/4W	2.2K OHM	*	00/00/00
ACT	R33033	1.00	4702-0473-003	RES, 5%, 1/4W	47K OHM	*	00/00/00
ACT	R33034	-.--	4702-0102-003	RES, 5, 1/4W,	1.0K	OHM	00/00/00
ACT	R33035	-.--	4702-0222-003	RES, 5%, 1/4W	2.2K OHM	*	00/00/00
ACT	R33036 SAT	1.00	4702-0822-003	RES, 5, 1/4W,	8.2K	OHM	00/00/00
ACT	R33037	-.--	4702-0683-003	RES, 5%, 1/4W	68K OHM	*	00/00/00
ACT	R33038	-.--	4702-0331-003	RES, 5%, 1/4W	330 OHM	*	00/00/00
ACT	R33039	-.--	4702-0221-003	RES, 5, 1/4W	220 OHM	*	00/00/00
ACT	R33040	1.00	4702-0333-003	RES, 5%, 1/4W	33K OHM	*	00/00/00
ACT	R33041	1.00	4702-0561-003	RES, 5, 1/4W,	560	OHM	00/00/00
ACT	R33042	1.00	4722-6819-001	RES, 1% 1/8W	68.1	OHM *	00/00/00
ACT	U33001	1.00	3134-0000-011	IC,7908C,1.5A -8V REGULATOR			00/00/00
ACT	U33002	1.00	3134-0000-004	IC,1658,VC MULTIVIBRATOR			00/00/00

A B C D

1 2 3 4 5 6

NOTE:

1. ALL REFERENCE NUMBERS CARRY AN ASSIGNED DESIGNATOR SERIES. THIS SCHEMATIC CARRIES SERIES 33XXX (eg. R1 is R33001).
2. ALL RESISTORS ARE ¼ W, 5%. PRECISION RESISTORS (1%) ARE DESIGNATED BY AN ASTERISK (*)
3. ALL RESISTANCE IS EXPRESSED IN OHMS.
4. ALL CAPACITANCE IS EXPRESSED IN MICROFARADS, UNLESS OTHERWISE SPECIFIED
5. ALL INDUCTANCE IS EXPRESSED IN MICROHENRYS
6. LAST REFERENCE NUMBER USED:
   - Q9
   - U2
   - CR6
   - L11
   - R42
   - C45
   - GL1
   - FL5
   - J5
7. R36 IS A SELECTED AT TEST (SAT) COMPONENT.
   NOMINAL VALUE IS 8.2 K
   RANGE VALUE IS 4.7K TO 12K.

E F G H

DATE	REV	CHANGE	APVD
4/1/5	A	[illegible]	[illegible]
		[illegible] 973-3212	
[illegible]	A-2	INC ECN 8464 [illegible]	[illegible]
[illegible]	A-3	INC ECN 1313 [illegible]	[illegible]
[illegible]	A-4	INC ECN 136 37053 [illegible]	[illegible]

-400	33XXX	7010-4931-400	RD-301
DASH NO	REF DES SERIES	NEXT ASSY	MODEL

APPLICATION

UNLESS OTHERWISE SPECIFIED:
ALL DIMENSIONS APPLY AFTER FINISH
TOLERANCES:
DECIMALS: .xx ± — .xxx ± —
FRACTIONS: ±
ANGLES: ±
SURFACE FINISH: √
REMOVE ALL BURRS
DO NOT SCALE THIS DRAWING

MATERIAL

FINISH

-IFR INC- 10200 West York Street Wichita, Kansas 67215

DRAWN L.A. Meis Jr	DATE 23 JAN 85
CHECKED VB	DATE 1-27-85
APPROVED Greenbank	DATE 1-29-85

TITLE: SCHEMATIC IF MKR/OSC RD301 (49-114)

SIZE	DWG. NO.	REV
C	0000-4911-400	A-4

SCALE	CODE IDENT.	WEIGHT	SHEET 1 OF 2
	51190		

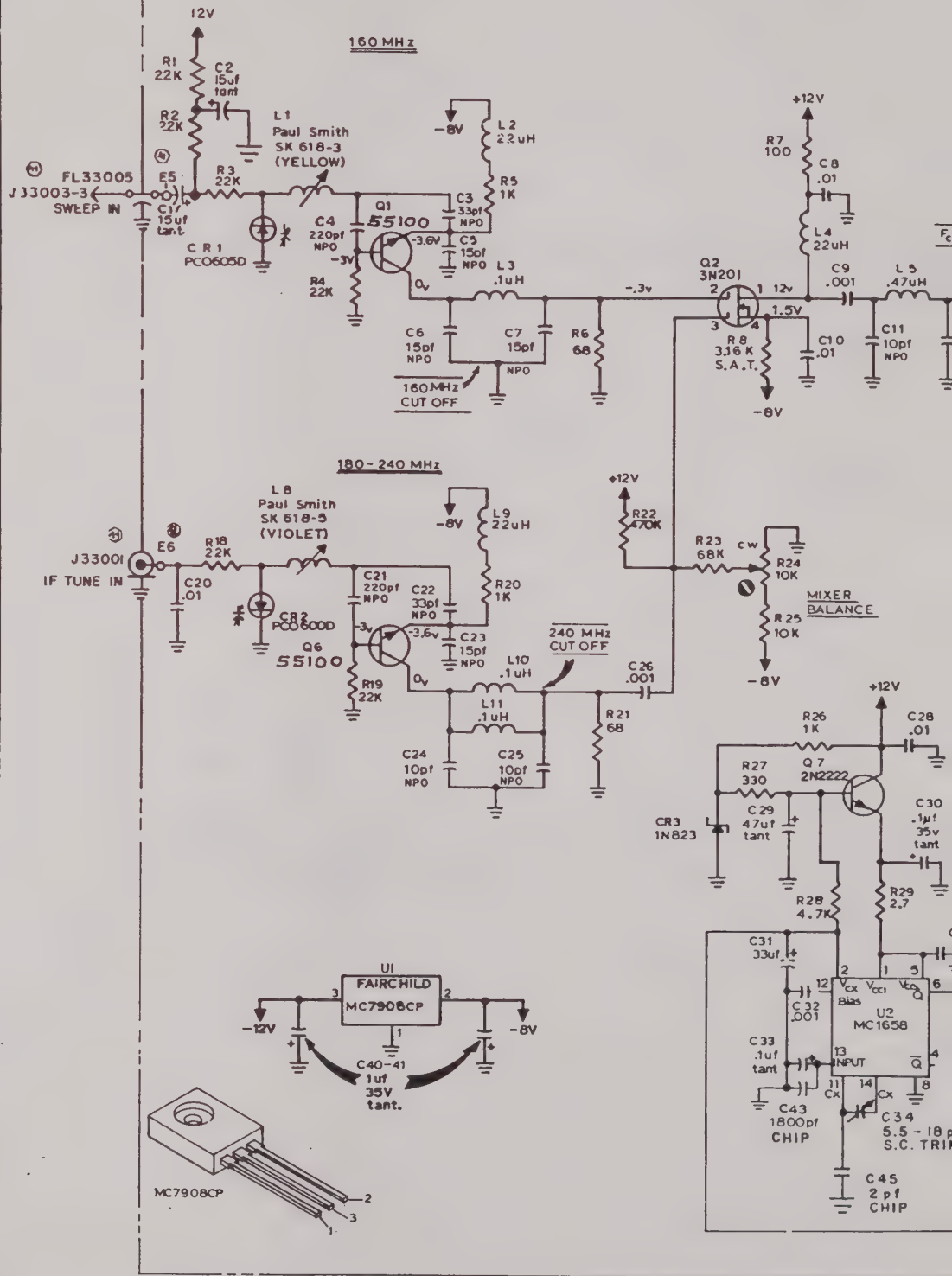
160 MHz
12V
R1 22K
C2 15uf tant
R2 22K
L1 Paul Smith SK 618-3 (YELLOW)
FL33005
J33003-3
SWEEP IN
E5
C1 15uf tant
R3 22K
CR1 PC0605D
C4 220pf NPO
Q1 55100
-3V
-3.6V
-8V
L2 .22uH
R5 1K
C3 33pf NPO
C5 15pf NPO
R4 22K
L3 .1uH
C6 15pf NPO
C7 15pf NPO
160 MHz CUT OFF
R6 68
-.3v
+12V
R7 100
C8 .01
L4 22uH
Q2 3N201
12v
1.5V
R8 3.16 K S.A.T.
C10 .01
C9 .001
L5 .47uH
C11 10pf NPO
-8V
180 - 240 MHz
L8 Paul Smith SK 618-5 (VIOLET)
J33001
IF TUNE IN
E6
R18 22K
C20 .01
CR2 PC0600D
C21 220pf NPO
C22 33pf NPO
L9 .22uH
R20 1K
Q6 55100
-3v
-3.6v
C23 15pf NPO
L10 .1uH
240 MHz CUT OFF
C26 .001
R19 22K
L11 .1uH
R21 68
C24 10pf NPO
C25 10pf NPO
R22 470K
R23 68K
cw
R24 10K
R25 10K
MIXER BALANCE
R26 1K
C28 .01
R27 330
Q7 2N2222
CR3 1N823
C29 47uf tant
C30 .1uf 35v tant
R28 4.7K
R29 2.7
C31 33uf
U1 FAIRCHILD MC7908CP
-12V
-8V
C40-41 1uf 35V tant.
MC7908CP
U2 MC1658
Bias
INPUT
C32 .001
C33 .1uf tant
C43 1800pf CHIP
C34 5.5 - 18 p S.C. TRI
C45 2 pf CHIP

DATE	REV	CHANGE	APP'D
4/1/85	A	PRODUCTION RELEASE	VH
		SEE SHT 1 FOR REV	

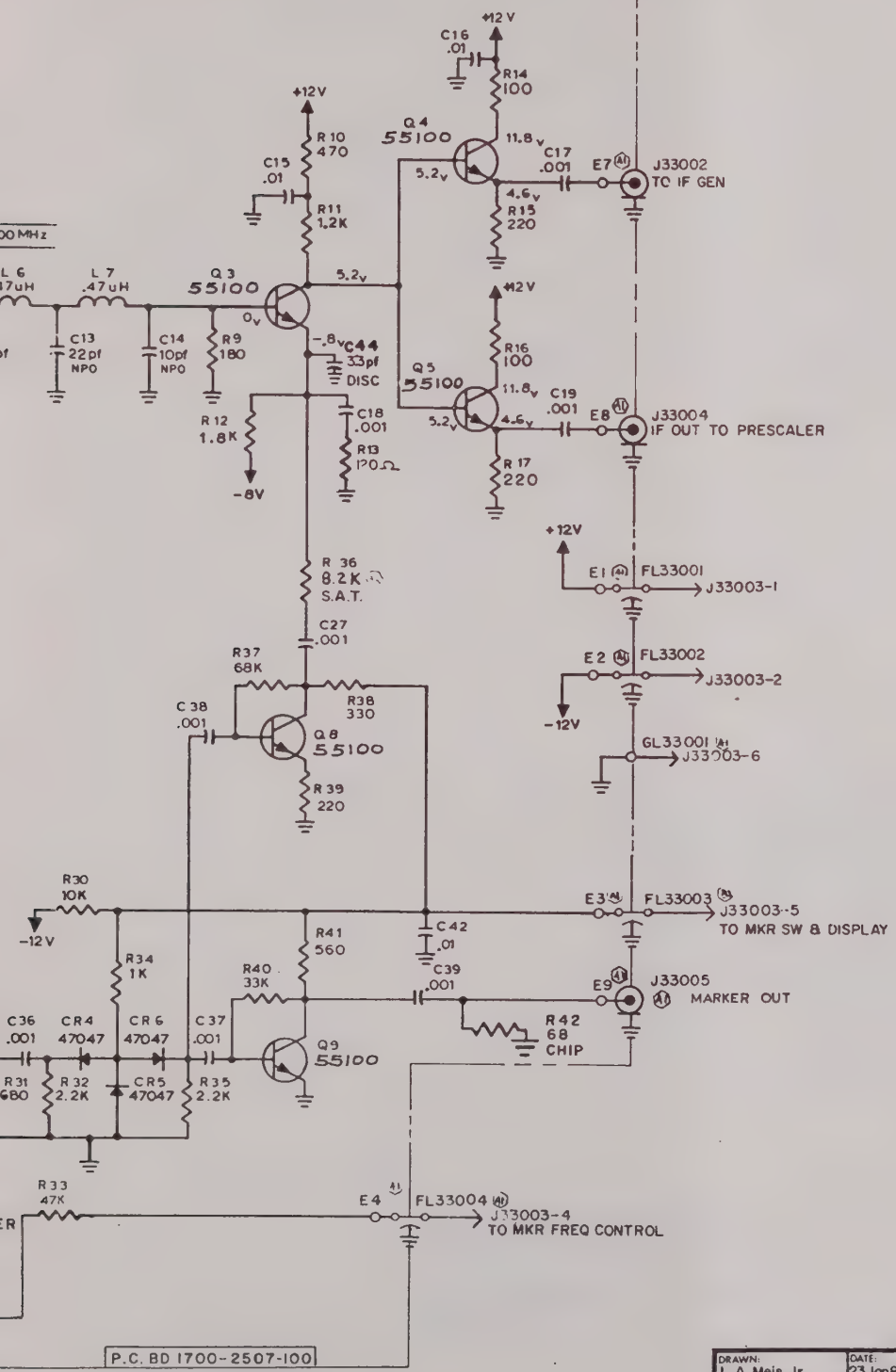

DRAWN: L.A. Meis, Jr.	DATE: 23 Jan 85	TITLE: SCHEMATIC IF MKR / OSC RD301 (49-114)	
CHECKED: WB	DATE: 1-27-85		
APPROVED: [illegible]	DATE: 1-29-85		
RELEASED:	DATE:	PART NO: 0000-4911-400	
MODEL: RD 301	SCALE: —	SHEET 2 OF 2	REV A-4

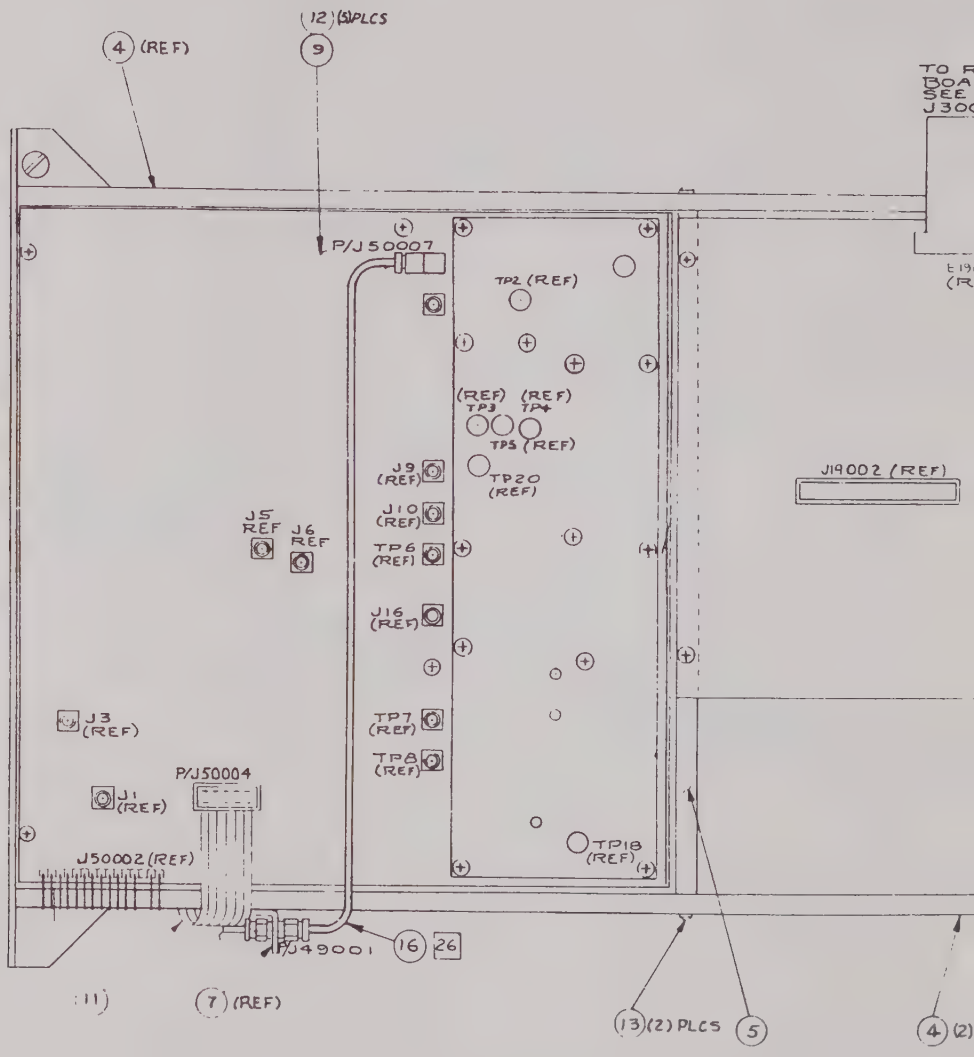
(4) (REF)
(12) (5) PLCS
(9)
TO F
BOA
SEE
J300
P/J50007
TP2 (REF)
(REF) (REF)
TP3 TP4
TP5 (REF)
J9 (REF)
TP20 (REF)
J19002 (REF)
J10 (REF)
J5 REF
J6 REF
TP6 (REF)
J16 (REF)
J3 (REF)
TP7 (REF)
TP8 (REF)
P/J50004
J1 (REF)
J50002 (REF)
TP18 (REF)
P/J49001
16
26
(11)
(7) (REF)
(13) (2) PLCS
5
(4) (2)

TOP VIEW

F G H J K L

DATE	REV	CHANGE	APVD
	A	RELEASE	

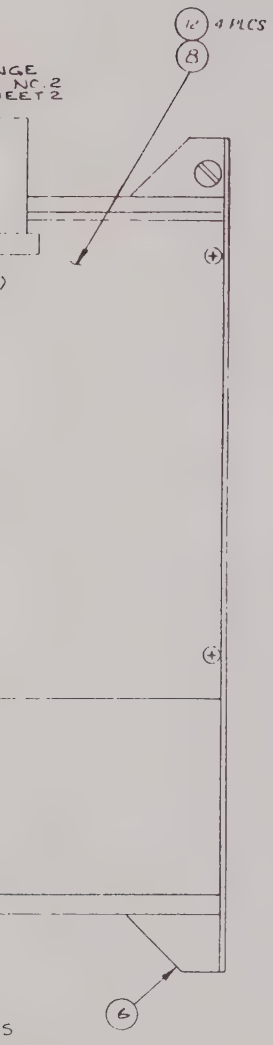

COAX RUNNING LIST						
COAX TAG	FROM ASSEMBLY	FROM CONNECTOR	TO ASSEMBLY	TO CONNECTOR	DWG ITEM	D/P/N
	7010-4932-800	J50008	7005-4943-000	J53003	15	8042-4984-300
	7010-4932-800	J50011	7005-4943-000	J53001	14	8042-4984-400
	7010-4932-800	J50012	7005-4943-000	J53004	14	8042-4984-400
	7010-4932-800	J50013	7005-4943-000	J53002	15	8042-4984-300
28	7010-4932-800	J50007	7005-9041-100 MOUNT TO ITEM 7	P49001	16	8042-4983-900

NOTES:

1. ALL REF. Nº'S CARRY AN ASSIGNED DESIGNATOR SERIES. THIS DWG CARRIES SERIES 13XXX (e.g. J1 IS J13001).
2. ITEMS #03, #19 AND #20 ARE INSTALLED BY FINAL TEST.
3. [XX] INDICATES COAX TAG NO

DRAWN WAW 9-19-91	-IFR INC-	
CHECKED	TITLE MECH ASSY CARD FRAME	
SUPERVISOR	SIZE D DWG NO 7005-9041-100	REV A
	SCALE — CODE IDENT 51180	SHEET 1 OF 2

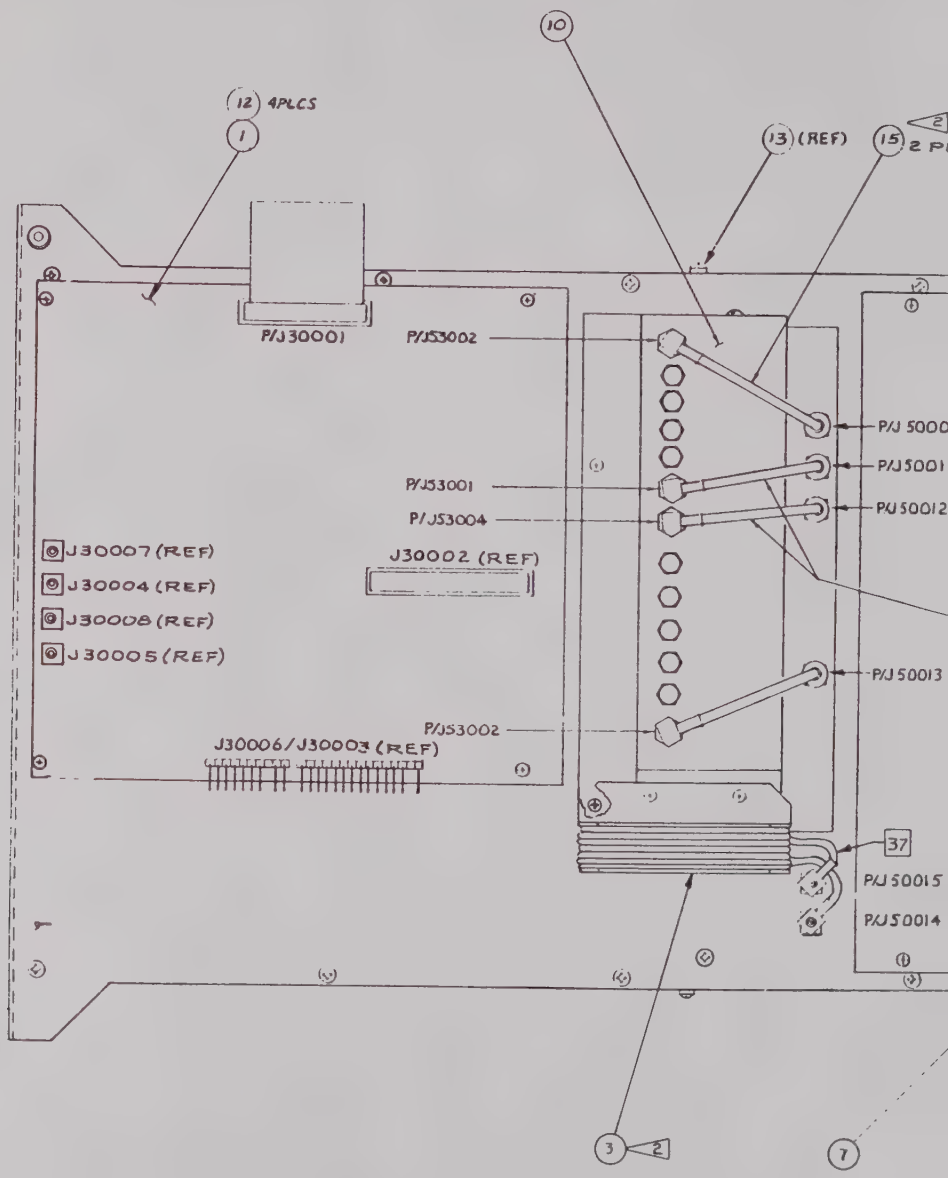
12 4PLCS
1
10
13 (REF)
15
P/J30001
P/J53002
P/J53001
P/J53004
J30007 (REF)
J30004 (REF)
J30008 (REF)
J30005 (REF)
J30002 (REF)
J30006/J30003 (REF)
P/J50013
37
P/J50015
P/J50014
3
2
7

BOTTOM VIEW

F G H J K L

SHEET 1

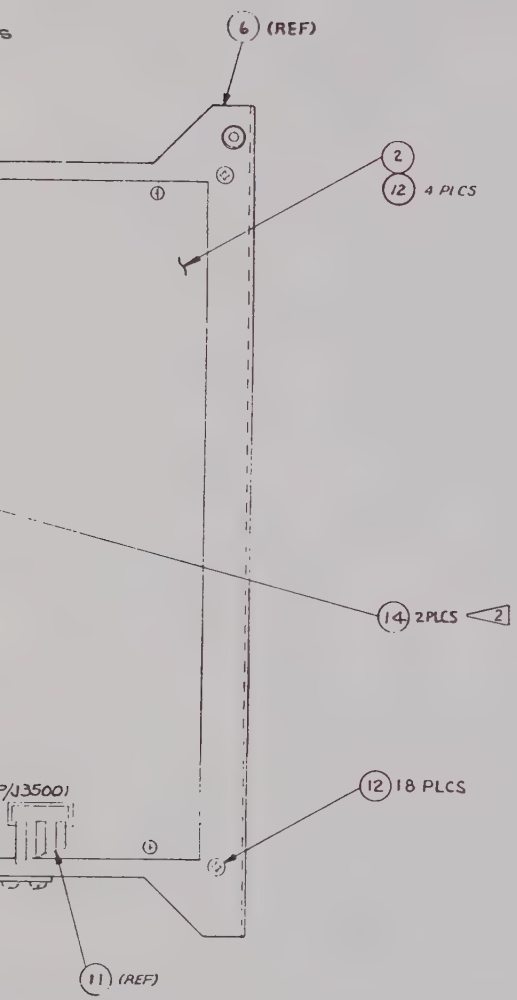

SEE SHT 1 FOR NOTES

HAS BOM	-IFR INC-	
WAW 9-19-91	MECH ASSY CARD FRAME	
	D 7005-9041-100	A

ASSY NO.	REVISION	DESCRIPTION	LAST ECN	DATE INC
7005-9041-100	A	MECH ASSY, CARD FRAME		10/30/71

STAT	REF.DES.	QTY	COMP. PART NO.	DESCRIPTION	EFFECTIVE
ACT	*01	1.00	7010-4933-100	PCB ASSY,RANGE BOARD #2	00/00/00
ACT	*02	1.00	7010-4931-300	PCB ASSY,DISCRIMINATOR #2	00/00/00
ACT	*03	1.00	7005-9041-000	MECH ASSY, DELAY LINE	00/00/00
ACT	*04	2.00	1402-4954-000	RAIL,CARD FRAME,OUTER	00/00/00
ACT	*05	1.00	1402-4954-100	RAIL,CARD FRAME,INNER	00/00/00
ACT	*06	1.00	1405-4985-100	PANEL,CARD FRAME	00/00/00
ACT	*07	1.00	1400-4953-600	BRACKET,SMB CONN MTG	00/00/00
ACT	*08	1.00	7010-4930-300	PCB ASSY,RANGE BOARD #1	00/00/00
ACT	*09	1.00	7010-4932-800	PC BD ASSY-DISCR BD NO.1	00/00/00
ACT	*10	1.00	7005-4943-000	MECH ASSY,475/570-775MHZ FLTR	00/00/00
ACT	*11	1.00	6045-4983-700	RGN CA ASSY,DISC #1--DISC #2	00/00/00
ACT	*12	45.00	2803-0250-006	SCREW,4-40 X 1/4 PPHM	00/00/00
ACT	*13	2.00	2803-0438-006	SCREW,4-40 X 7/16 PPHM	00/00/00
ACT	*14	2.00	6042-4984-400	COAX ASSY SR .086,DISC,2.32LG	00/00/00
ACT	*15	2.00	6042-4984-300	COAX ASSY SR DSCRM 1.98LG	00/00/00
ACT	TAG#26	1.00	6042-4983-900	COAX ASSY,SR.086,DSCM-PRESC.	00/00/00

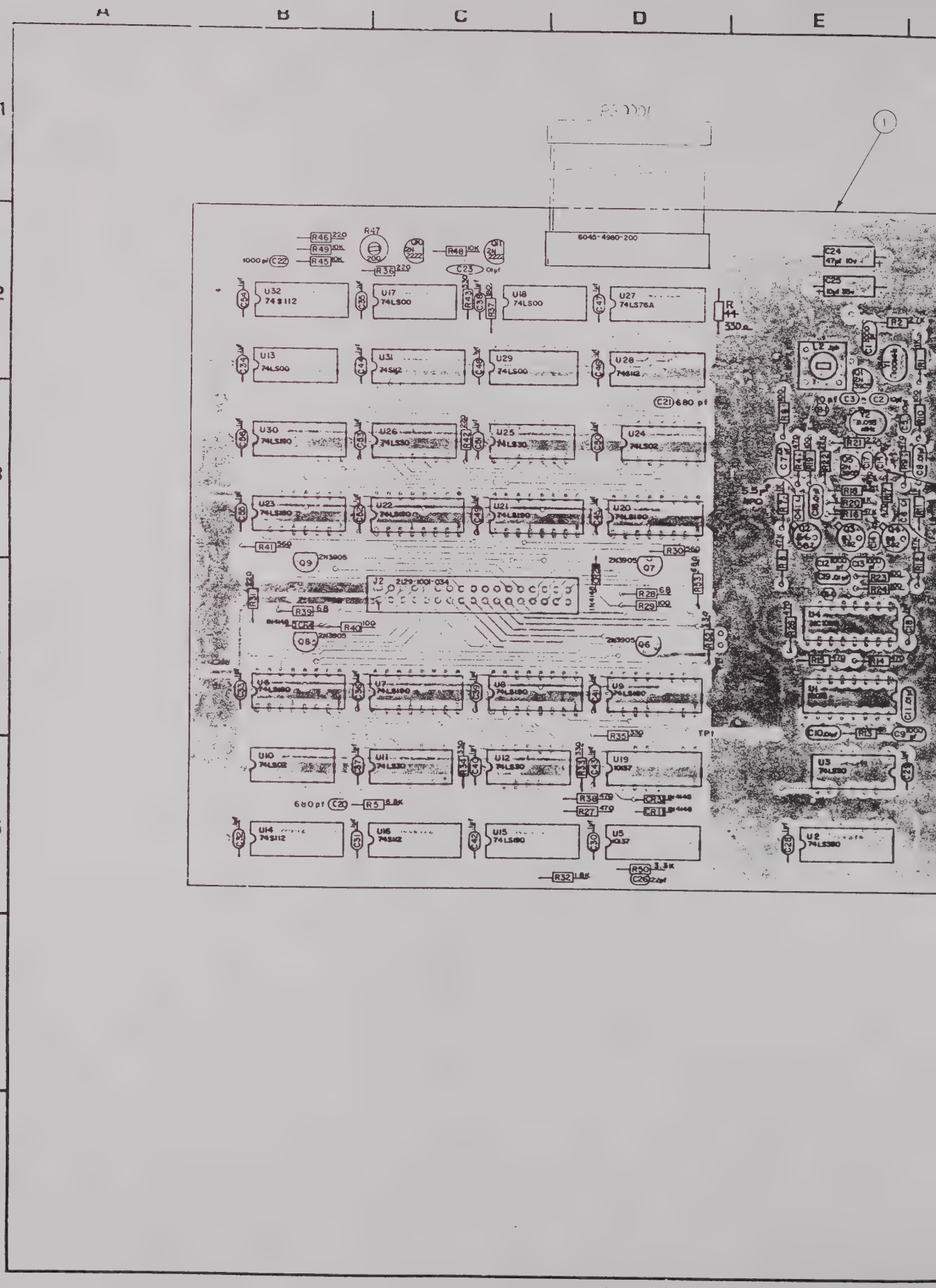

A
B
C
D
E
1
2
3
4
5
6
7
6045-4980-200
R46 220
R49 10K
R45 10K
R47 200
R48 10K
R36 220
C23 .01µf
1000 pf C22
U32 74S112
U17 74LS00
U18 74LS00
U27 74LS76A
R44 330Ω
U13 74LS00
U31 74S112
U29 74LS00
U28 74S112
C21 680 pf
U30 74LS190
U26 74LS30
U25 74LS30
U24 74LS02
U23 74LS190
U22 74LS190
U21 74LS190
U20 74LS190
R41 560
Q9 2N3905
R30 560
Q7 2N3905
J2 2129-1001-034
R28 68
R29 100
R39 68
R40 100
Q8 2N3905
Q6 2N3905
U6 74LS190
U7 74LS190
U8 74LS190
U9 74LS190
R35 330
TP1
U10 74LS02
U11 74LS30
U12 74LS30
U19 10137
680 pf C20
R5 6.8K
R38 470
R27 470
CR3 1N4148
CR1 1N4148
U14 74S112
U16 74S112
U15 74LS190
U5 10137
R32 1.8K
R50 3.3K
C26 22µf
C24 47µf 10v
C25 10µf 35v
R2 2.7K
L2 1µh
Y1 1000mhz
C3 10 pf
C2 10 pf
Y2 3.0 mhz
R21 220
R19 1K
R20 1K
R16 47K
R23 100
R24 100
U4 MC10000
R15 470
R14 470
U1 10137
C10 .01µf
R13 1K
C9 1000 pf
U3 74LS30
U2 74LS390

F | G | H | J | K | L

DATE	REV	CHANGE		APVD
[illegible] 84	A	PROTOTYPE RELEASE		[illegible]
[illegible]	B	PRODUCTION RELEASE ECN [illegible]		JH
[illegible]	C	[illegible] ECN [illegible]3838 [illegible] #[illegible]535	S.W. S.W.	
[illegible] 85	C-1	INC ECN 7241	AO	[illegible]
[illegible]	C-2	INC RC [illegible]	[illegible]	VLH
[illegible]	C-3	INC RC 7797	[illegible]	[illegible]
[illegible]	C-4	INC RC 3127	[illegible]	[illegible]
[illegible]	C-5	INC [illegible]	[illegible]	JS
2-6 86	C-6	INC ECN 7631	[illegible]	VLH
[illegible]	C-7	INC ECN 9461	[illegible]	VLH
3-24 88	D	INC RC 10864	RC	VLH
6-24 88	D-1	INC RC 11179	JR	[illegible]
9/21/89	E	INC ECN 12357	WB	[illegible]
6-7 90	F	INC ECN 13235	AO	BP
7-9 90	F-1	INC RC 13526	AO	BP
11-8 90	F-2	INC ECN 13782	AO	BP
9-24 92	F-3	INC ECN 1477[illegible]	AO	[illegible]

NOTE:

1. ALL REF N°'s CARRY AN ASSIGNED DESIGNATOR SERIES. THIS DRAWING CARRIES SERIES 19XXX. (i.e. R1 is R19001)
2. ALL RESISTORS ARE 1/4w, 5 %, UNLESS OTHERWISE SPECIFIED.
3. ALL RESISTANCE IS EXPRESSED IN OHMS.
4. REFERENCE SCHEMATIC DRAWING N° 0000-4910-300

5 ▷ C15 IS A SAT COMPONENT
NOMINAL VALUE: 82pf
RANGE: 68pf TO 100pf

6 ▷ ADD C27 & R51 TO BOTTOM SIDE
REV "F" PC BOARD.
CUT & INSTALL ITEM 2 (3107-5052-200)
.7" x .3" ADHESIVE BACK MYLAR
INSULATOR UNDER C27 & R51.

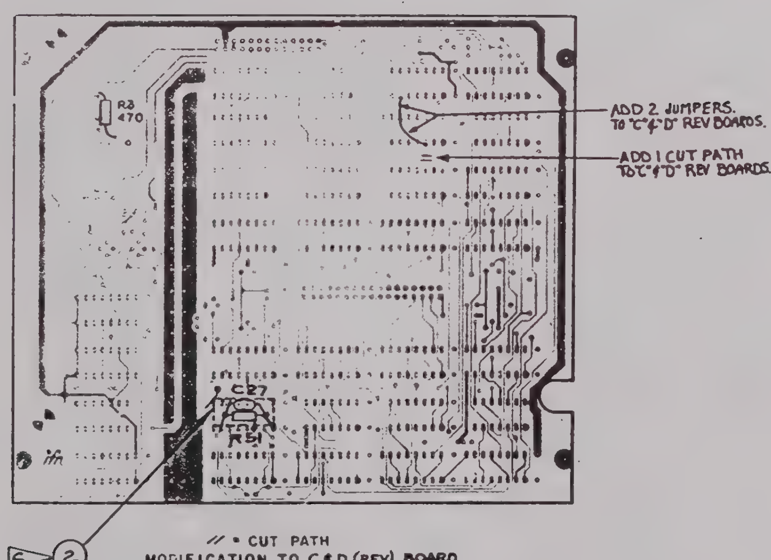

// = CUT PATH
MODIFICATION TO C & D (REV) BOARD

JUMPER WIRE LOCATION DETAIL
(ALL JUMPERS TO BE OF 26ga BUSS WIRE
DPN 1050-0000-075 WITH
SLEEVING, 26GA TFE TUBING
DPN 6011-0018-001)
(BOTTOM SIDE)

	-IFR INC-
DRAWN L.A. Mele, Jr. DATE 15 Dec '84	TITLE P.C. BOARD ASSY RANGE BOARD N° 1
CHECKED [illegible] DATE 1-14-85	
APPROVED [signature] DATE 1-14-85	SIZE D · DWG. NO. 7010-4930-300 · REV F-3
	SCALE 2:1 · SHEET 1 OF 1

(14)

REQUEST

BILL OF MATERIAL LISTED BY REFERENCE DESIGNATOR
AS OF ALL DATES

ASSEMBLY PART NO.: 7010-4930-300
DESCRIPTION: PCB ASSY,RANGE BOARD #1
ITEM MASTER REV: F3 ECO NO: 14771
REV OF THIS BOM: DATE OF LAST ECO: 09/08/92

STATUS	REFERENCE DESIGNATOR	QUANTITY PER ASSY	PART NUMBER	DESCRIPTION	EFFEC
ACTIVE		.00	DWG-0000-4910-300	DWG SCHEM,RANGE BOARD #1	00/0(
ACTIVE	*01	1.00	1700-4920-300	PC BD,RANGE BOARD #1	00/0(
ACTIVE	*02	.01	3107-5052-200	INSUL,MYLAR,ADHES,3.8 X 6.88	09/0-
OBSOLETE	*02	.30	6011-0018-001	TUBING,TF,26 AWG,NATURAL,TW	00/0(
ACTIVE	C19001	5.00	1506-0102-017	CAP, pF 1000, 100V, NPO 5 *	00/0(
ACTIVE	C19002	4.00	1506-0100-017	CAP,PF 10, 100V,NPO, 5	00/0(
ACTIVE	C19003	-.--	1506-0100-017	CAP,PF 10, 100V,NPO, 5	00/0(
ACTIVE	C19004	2.00	1506-0050-017	CAP,pF 5.6 100V NPO 5 *	00/0(
ACTIVE	C19005	-.--	1506-0100-017	CAP,PF 10, 100V,NPO, 5	00/0(
ACTIVE	C19006	-.--	1506-0050-017	CAP,pF 5.6 100V NPO 5 *	00/0(
ACTIVE	C19007	7.00	1501-0103-005	CAP,UF .010, 50V,DISC, 10	00/0(
ACTIVE	C19008	-.--	1501-0103-005	CAP,UF .010, 50V,DISC, 10	00/0(
ACTIVE	C19009	-.--	1506-0102-017	CAP, pF 1000, 100V, NPO 5 *	00/0(
ACTIVE	C19010	-.--	1501-0103-005	CAP,UF .010, 50V,DISC, 10	00/0(
ACTIVE	C19011	-.--	1501-0103-005	CAP,UF .010, 50V,DISC, 10	00/0(
ACTIVE	C19012	-.--	1506-0102-017	CAP, pF 1000, 100V, NPO 5 *	00/0(
ACTIVE	C19013	-.--	1506-0102-017	CAP, pF 1000, 100V, NPO 5 *	00/0(
ACTIVE	C19014	1.00	1506-0470-017	CAP, 47pF 100V NPO *	00/0(
ACTIVE	C19015SAT	1.00	1506-0820-017	CAP, pF 82 100V NPO 5 *	00/0(
ACTIVE	C19016	-.--	1501-0103-005	CAP,UF .010, 50V,DISC, 10	00/0(
ACTIVE	C19017	1.00	1506-0471-017	CAP,pF 470, 100V,NPO 5 *	00/0(
ACTIVE	C19018	30.00	1521-0000-008	CAP,UF .10 50V,DIP Z5U *	00/0(

LI,283,2.MDATAB01 IFR SYSTEMS, INC.
MON, JAN 4, 1993, 12:46 PM

BILL OF MATERIAL LISTED BY REFERENCE DESIGNATOR
AS OF ALL DATES

ASSEMBLY PART NO.: 7010-4930-300
DESCRIPTION: PCB ASSY,RANGE BOARD #1
ITEM MASTER REV: F3 ECO NO: 14771
REV OF THIS BOM: DATE OF LAST ECO: 09/08/92

STATUS	REFERENCE DESIGNATOR	QUANTITY PER ASSY	PART NUMBER	DESCRIPTION	EFFEC
ACTIVE	C19019	-.--	1501-0103-005	CAP,UF .010, 50V,DISC, 10	00/00
ACTIVE	C19020	2.00	1506-0681-017	CAP,pF, 680, 100V,NPO, 5 *	00/00
ACTIVE	C19021	-.--	1506-0681-017	CAP,pF, 680, 100V,NPO, 5 *	00/00
ACTIVE	C19022	-.--	1506-0102-017	CAP, pF 1000, 100V, NPO 5 *	00/00
ACTIVE	C19023	-.--	1501-0103-005	CAP,UF .010, 50V,DISC, 10	00/00
ACTIVE	C19024	1.00	1580-4700-045	CAP,UF 47, 10V,ELE, 30	00/00
ACTIVE	C19025	1.00	1580-1000-350	CAP, uF 10, 35V ELE *	00/00
ACTIVE	C19026	1.00	1506-0220-017	CAP,PF 22, 100V,NPO, 5	00/00
ACTIVE	C19027	-.--	1506-0100-017	CAP,PF 10, 100V,NPO, 5	00/00
ACTIVE	C19028	-.--	1521-0000-008	CAP,UF .10 50V,DIP Z5U *	00/00
ACTIVE	C19029	-.--	1521-0000-008	CAP,UF .10 50V,DIP Z5U *	00/00
ACTIVE	C19030	-.--	1521-0000-008	CAP,UF .10 50V,DIP Z5U *	00/00
ACTIVE	C19031	-.--	1521-0000-008	CAP,UF .10 50V,DIP Z5U *	00/00
ACTIVE	C19032	-.--	1521-0000-008	CAP,UF .10 50V,DIP Z5U *	00/00
ACTIVE	C19033	-.--	1521-0000-008	CAP,UF .10 50V,DIP Z5U *	00/00
ACTIVE	C19034	-.--	1521-0000-008	CAP,UF .10 50V,DIP Z5U *	00/00
ACTIVE	C19035	-.--	1521-0000-008	CAP,UF .10 50V,DIP Z5U *	00/00
ACTIVE	C19036	-.--	1521-0000-008	CAP,UF .10 50V,DIP Z5U *	00/00
ACTIVE	C19037	-.--	1521-0000-008	CAP,UF .10 50V,DIP Z5U *	00/00
ACTIVE	C19038	-.--	1521-0000-008	CAP,UF .10 50V,DIP Z5U *	00/00
ACTIVE	C19039	-.--	1521-0000-008	CAP,UF .10 50V,DIP Z5U *	00/00
ACTIVE	C19040	-.--	1521-0000-008	CAP,UF .10 50V,DIP Z5U *	00/00

LI,283,2.MDATAB01 IFR SYSTEMS, INC.
MON, JAN 4, 1993, 12:46 PM

BILL OF MATERIAL LISTED BY REFERENCE DESIGNATOR
AS OF ALL DATES

ASSEMBLY PART NO.: 7010-4930-300
DESCRIPTION: PCB ASSY,RANGE BOARD #1
ITEM MASTER REV: F3 ECO NO: 14771
REV OF THIS BOM: DATE OF LAST ECO: 09/08/92

STATUS	REFERENCE DESIGNATOR	QUANTITY PER ASSY	PART NUMBER	DESCRIPTION	EFFEC
ACTIVE	C19041	-.--	1521-0000-008	CAP,UF .10 50V,DIP Z5U *	00/00
ACTIVE	C19042	-.--	1521-0000-008	CAP,UF .10 50V,DIP Z5U *	00/00
ACTIVE	C19043	-.--	1521-0000-008	CAP,UF .10 50V,DIP Z5U *	00/00
ACTIVE	C19044	-.--	1521-0000-008	CAP,UF .10 50V,DIP Z5U *	00/00
ACTIVE	C19045	-.--	1521-0000-008	CAP,UF .10 50V,DIP Z5U *	00/00
ACTIVE	C19046	-.--	1521-0000-008	CAP,UF .10 50V,DIP Z5U *	00/00
ACTIVE	C19047	-.--	1521-0000-008	CAP,UF .10 50V,DIP Z5U *	00/00
ACTIVE	C19048	-.--	1521-0000-008	CAP,UF .10 50V,DIP Z5U *	00/00
ACTIVE	C19049	-.--	1521-0000-008	CAP,UF .10 50V,DIP Z5U *	00/00
ACTIVE	C19050	-.--	1521-0000-008	CAP,UF .10 50V,DIP Z5U *	00/00
ACTIVE	C19051	-.--	1521-0000-008	CAP,UF .10 50V,DIP Z5U *	00/00
ACTIVE	C19052	-.--	1521-0000-008	CAP,UF .10 50V,DIP Z5U *	00/00
ACTIVE	C19053	-.--	1521-0000-008	CAP,UF .10 50V,DIP Z5U *	00/00
ACTIVE	C19054	-.--	1521-0000-008	CAP,UF .10 50V,DIP Z5U *	00/00
ACTIVE	C19055	-.--	1521-0000-008	CAP,UF .10 50V,DIP Z5U *	00/00
ACTIVE	C19056	-.--	1521-0000-008	CAP,UF .10 50V,DIP Z5U *	00/00
ACTIVE	CR19001	4.00	4815-0000-003	DIODE, 1N4148 ,SIGNAL, 75PRV	00/00
ACTIVE	CR19002	-.--	4815-0000-003	DIODE, 1N4148 ,SIGNAL, 75PRV	00/00
ACTIVE	CR19003	-.--	4815-0000-003	DIODE, 1N4148 ,SIGNAL, 75PRV	00/00
ACTIVE	CR19004	-.--	4815-0000-003	DIODE, 1N4148 ,SIGNAL, 75PRV	00/00
ACTIVE	J19002	1.00	2129-1001-034	CONN, 34P LO PRF HDR SHORT ST*	00/00
ACTIVE	L19002	1.00	1800-7629-300	XFMR,.1UH,108-177MHZ,BLUE	00/00

LI,283,2.MDATAB01 IFR SYSTEMS, INC.
MON, JAN 4, 1993, 12:46 PM

BILL OF MATERIAL LISTED BY REFERENCE DESIGNATOR
AS OF ALL DATES

ASSEMBLY PART NO.: 7010-4930-300
DESCRIPTION: PCB ASSY,RANGE BOARD #1
ITEM MASTER REV: F3 ECO NO: 14771
REV OF THIS BOM: DATE OF LAST ECO: 09/08/92

STATUS	REFERENCE DESIGNATOR	QUANTITY PER ASSY	PART NUMBER	DESCRIPTION		EFFEC
ACTIVE	P30001	1.00	6045-4980-200	RBN CA ASSY,RANGE #1- RANGE #2		00/00
ACTIVE	Q19001	6.00	4807-0000-002	TRANS, 2N3905 ,PNP HS SW		00/00
ACTIVE	Q19002	3.00	4809-0000-005	TRANS,66382 ,NPN HF AMP		00/00
ACTIVE	Q19003	-.--	4809-0000-005	TRANS,66382 ,NPN HF AMP		00/00
ACTIVE	Q19004	-.--	4809-0000-005	TRANS,66382 ,NPN HF AMP		00/00
ACTIVE	Q19005	-.--	4807-0000-002	TRANS, 2N3905 ,PNP HS SW		00/00
ACTIVE	Q19006	-.--	4807-0000-002	TRANS, 2N3905 ,PNP HS SW		00/00
ACTIVE	Q19007	-.--	4807-0000-002	TRANS, 2N3905 ,PNP HS SW		00/00
ACTIVE	Q19008	-.--	4807-0000-002	TRANS, 2N3905 ,PNP HS SW		00/00
ACTIVE	Q19009	-.--	4807-0000-002	TRANS, 2N3905 ,PNP HS SW		00/00
ACTIVE	Q19010	2.00	4801-0000-001	TRANSISTOR NPN HS SW	*	00/00
ACTIVE	Q19011	-.--	4801-0000-001	TRANSISTOR NPN HS SW	*	00/00
ACTIVE	R19001	4.00	4702-0102-003	RES, 5, 1/4W, 1.0K OHM		00/00
ACTIVE	R19002	1.00	4702-0272-003	RES, 5%, 1/4W 2.7K OHM	*	00/00
ACTIVE	R19003	9.00	4702-0471-003	RES, 5, 1/4W, 470 OHM		00/00
ACTIVE	R19004	-.--	4702-0471-003	RES, 5, 1/4W, 470 OHM		00/00
ACTIVE	R19005	1.00	4702-0682-003	RES, 5%, 1/4W 6.8K OHM	*	00/00
ACTIVE	R19006	7.00	4702-0101-003	RES, 5, 1/4W, 100 OHM		00/00
ACTIVE	R19007	-.--	4702-0102-003	RES, 5, 1/4W, 1.0K OHM		00/00
ACTIVE	R19008	3.00	4702-0473-003	RES, 5%, 1/4W 47K OHM	*	00/00
ACTIVE	R19009	-.--	4702-0471-003	RES, 5, 1/4W, 470 OHM		00/00
ACTIVE	R19010	-.--	4702-0101-003	RES, 5, 1/4W, 100 OHM		00/00

LI,283,2.MDATAB01 IFR SYSTEMS, INC.
MON, JAN 4, 1993, 12:46 PM

BILL OF MATERIAL LISTED BY REFERENCE DESIGNATOR
AS OF ALL DATES

ASSEMBLY PART NO.: 7010-4930-300
DESCRIPTION: PCB ASSY,RANGE BOARD #1
ITEM MASTER REV: F3 ECO NO: 14771
REV OF THIS BOM: DATE OF LAST ECO: 09/08/92

STATUS	REFERENCE DESIGNATOR	QUANTITY PER ASSY	PART NUMBER	DESCRIPTION			EFFEC
ACTIVE	R19011	-.--	4702-0102-003	RES, 5, 1/4W,	1.0K	OHM	00/00
ACTIVE	R19012	-.--	4702-0473-003	RES, 5%, 1/4W	47K OHM	*	00/00
ACTIVE	R19013	3.00	4702-0680-003	RES, 5%, 1/4W,	68 OHM	*	00/00
ACTIVE	R19014	-.--	4702-0471-003	RES, 5, 1/4W,	470	OHM	00/00
ACTIVE	R19015	-.--	4702-0471-003	RES, 5, 1/4W,	470	OHM	00/00
ACTIVE	R19016	-.--	4702-0473-003	RES, 5%, 1/4W	47K OHM	*	00/00
ACTIVE	R19017	-.--	4702-0471-003	RES, 5, 1/4W,	470	OHM	00/00
ACTIVE	R19018	1.00	4702-0822-003	RES, 5, 1/4W,	8.2K	OHM	00/00
ACTIVE	R19019	-.--	4702-0101-003	RES, 5, 1/4W,	100	OHM	00/00
ACTIVE	R19020	-.--	4702-0102-003	RES, 5, 1/4W,	1.0K	OHM	00/00
ACTIVE	R19021	1.00	4702-0222-003	RES, 5%, 1/4W	2.2K OHM	*	00/00
ACTIVE	R19022	1.00	4702-0223-003	RES, 5%, 1/4W	22K OHM	*	00/00
ACTIVE	R19023	-.--	4702-0101-003	RES, 5, 1/4W,	100	OHM	00/00
ACTIVE	R19024	-.--	4702-0101-003	RES, 5, 1/4W,	100	OHM	00/00
ACTIVE	R19026	-.--	4702-0471-003	RES, 5, 1/4W,	470	OHM	00/00
ACTIVE	R19027	-.--	4702-0471-003	RES, 5, 1/4W,	470	OHM	00/00
ACTIVE	R19028	-.--	4702-0680-003	RES, 5%, 1/4W,	68 OHM	*	00/00
ACTIVE	R19029	-.--	4702-0101-003	RES, 5, 1/4W,	100	OHM	00/00
ACTIVE	R19030	2.00	4702-0561-003	RES, 5, 1/4W,	560	OHM	00/00
ACTIVE	R19031	4.00	4702-0221-003	RES, 5, 1/4W 220 OHM		*	00/00
ACTIVE	R19032	1.00	4702-0182-003	RES, 5, 1/4W,	1.8K	OHM	00/00
ACTIVE	R19033	6.00	4702-0331-003	RES, 5%, 1/4W	330 OHM	*	00/00

BILL OF MATERIAL LISTED BY REFERENCE DESIGNATOR
AS OF ALL DATES

ASSEMBLY PART NO.: 7010-4930-300
DESCRIPTION: PCB ASSY,RANGE BOARD #1
ITEM MASTER REV: F3 ECO NO: 14771
REV OF THIS BOM: DATE OF LAST ECO: 09/08/92

STATUS	REFERENCE DESIGNATOR	QUANTITY PER ASSY	PART NUMBER	DESCRIPTION		EFFEC
ACTIVE	R19034	-.--	4702-0331-003	RES, 5%, 1/4W 330 OHM	*	00/00
ACTIVE	R19035	-.--	4702-0331-003	RES, 5%, 1/4W 330 OHM	*	00/00
ACTIVE	R19036	-.--	4702-0221-003	RES, 5, 1/4W 220 OHM	*	00/00
ACTIVE	R19037	2.00	4702-0181-003	RES, 5, 1/4W, 180 OHM		00/00
ACTIVE	R19038	-.--	4702-0471-003	RES, 5, 1/4W, 470 OHM		00/00
ACTIVE	R19039	-.--	4702-0680-003	RES, 5%, 1/4W, 68 OHM	*	00/00
ACTIVE	R19040	-.--	4702-0101-003	RES, 5, 1/4W, 100 OHM		00/00
ACTIVE	R19041	-.--	4702-0561-003	RES, 5, 1/4W, 560 OHM		00/00
ACTIVE	R19042	-.--	4702-0221-003	RES, 5, 1/4W 220 OHM	*	00/00
ACTIVE	R19043	-.--	4702-0331-003	RES, 5%, 1/4W 330 OHM	*	00/00
ACTIVE	R19044	-.--	4702-0331-003	RES, 5%, 1/4W 330 OHM	*	00/00
ACTIVE	R19045	3.00	4702-0103-003	RES,5, 1/4W 10K OHM	*	00/00
ACTIVE	R19046	-.--	4702-0221-003	RES, 5, 1/4W 220 OHM	*	00/00
ACTIVE	R19047	1.00	4752-0201-002	POT, 200 OHM		00/00
ACTIVE	R19048	-.--	4702-0103-003	RES,5, 1/4W 10K OHM	*	00/00
ACTIVE	R19049	-.--	4702-0103-003	RES,5, 1/4W 10K OHM	*	00/00
ACTIVE	R19050	1.00	4702-0332-003	RES, 5, 1/4W, 3.3K OHM		00/00
ACTIVE	R19051	-.--	4702-0181-003	RES, 5, 1/4W, 180 OHM		00/00
ACTIVE	R19052	-.--	4702-0331-003	RES, 5%, 1/4W 330 OHM	*	00/00
ACTIVE	R19053	1.00	4702-0681-003	RES, 5, 1/4W, 680 OHM		00/00
ACTIVE	TP19001	1.00	2114-0000-007	POST,GANG,PCB,.025SQ,.443LG	*	00/00
ACTIVE	U19001	1.00	3134-0000-017	IC,12013,D/10/11 PRESCALER		00/00

LI,283,2.MDATAB01 IFR SYSTEMS, INC.
MON, JAN 4, 1993, 12:46 PM

BILL OF MATERIAL LISTED BY REFERENCE DESIGNATOR
AS OF ALL DATES

ASSEMBLY PART NO.: 7010-4930-300
DESCRIPTION: PCB ASSY,RANGE BOARD #1
ITEM MASTER REV: F3 ECO NO: 14771
REV OF THIS BOM: DATE OF LAST ECO: 09/08/92

STATUS	REFERENCE DESIGNATOR	QUANTITY PER ASSY	PART NUMBER	DESCRIPTION	EFFEC
ACTIVE	U19002	1.00	3211-3390-000	IC,74LS390,DUAL DECADE COUNTER	00/0(
ACTIVE	U19003	1.00	3131-0000-028	IC,74LS90,DECADE COUNTER	00/0(
ACTIVE	U19004	1.00	3134-0000-008	IC,10116,TRIPLE LINE RECEIVER	00/0(
ACTIVE	U19005	2.00	3213-0003-000	IC,10137,UNIV DECADE COUNTER	00/0(
ACTIVE	U19006	10.00	3131-0000-029	IC,74LS190,BCD SYN U/D COUNTER	00/0(
ACTIVE	U19007	-.--	3131-0000-029	IC,74LS190,BCD SYN U/D COUNTER	00/0(
ACTIVE	U19008	-.--	3131-0000-029	IC,74LS190,BCD SYN U/D COUNTER	00/0(
ACTIVE	U19009	-.--	3131-0000-029	IC,74LS190,BCD SYN U/D COUNTER	00/0(
ACTIVE	U19010	2.00	3131-0000-032	IC,74LS02,QUAD 2-INPUT NOR	00/0(
ACTIVE	U19011	4.00	3131-0000-027	IC,74LS30,8-INPUT NAND	00/0(
ACTIVE	U19012	-.--	3131-0000-027	IC,74LS30,8-INPUT NAND	00/0(
ACTIVE	U19013	4.00	3131-0000-044	IC,74LS00,QUAD 2-INPUT NAND	00/0(
ACTIVE	U19014	5.00	3132-0000-002	IC,74S112,DUAL JK FLIP-FLOP	00/0(
ACTIVE	U19015	-.--	3131-0000-029	IC,74LS190,BCD SYN U/D COUNTER	00/0(
ACTIVE	U19016	-.--	3132-0000-002	IC,74S112,DUAL JK FLIP-FLOP	00/0(
ACTIVE	U19017	-.--	3131-0000-044	IC,74LS00,QUAD 2-INPUT NAND	00/0(
ACTIVE	U19018	-.--	3131-0000-044	IC,74LS00,QUAD 2-INPUT NAND	00/0(
ACTIVE	U19019	-.--	3213-0003-000	IC,10137,UNIV DECADE COUNTER	00/0(
ACTIVE	U19020	-.--	3131-0000-029	IC,74LS190,BCD SYN U/D COUNTER	00/0(
ACTIVE	U19021	-.--	3131-0000-029	IC,74LS190,BCD SYN U/D COUNTER	00/0(
ACTIVE	U19022	-.--	3131-0000-029	IC,74LS190,BCD SYN U/D COUNTER	00/0(
ACTIVE	U19023	-.--	3131-0000-029	IC,74LS190,BCD SYN U/D COUNTER	00/0(

BILL OF MATERIAL LISTED BY REFERENCE DESIGNATOR
AS OF ALL DATES

ASSEMBLY PART NO.: 7010-4930-300
DESCRIPTION: PCB ASSY,RANGE BOARD #1
ITEM MASTER REV: F3 ECO NO: 14771
REV OF THIS BOM: DATE OF LAST ECO: 09/08/92

STATUS	REFERENCE DESIGNATOR	QUANTITY PER ASSY	PART NUMBER	DESCRIPTION	EFFEC
ACTIVE	U19024	-.--	3131-0000-032	IC,74LS02,QUAD 2-INPUT NOR	00/00
ACTIVE	U19025	-.--	3131-0000-027	IC,74LS30,8-INPUT NAND	00/00
ACTIVE	U19026	-.--	3131-0000-027	IC,74LS30,8-INPUT NAND	00/00
ACTIVE	U19027	1.00	3131-0000-006	IC,74LS76A,DUAL JK FLIP-FLOP	00/00
ACTIVE	U19028	-.--	3132-0000-002	IC,74S112,DUAL JK FLIP-FLOP	00/00
ACTIVE	U19029	-.--	3131-0000-044	IC,74LS00,QUAD 2-INPUT NAND	00/00
ACTIVE	U19030	-.--	3131-0000-029	IC,74LS190,BCD SYN U/D COUNTER	00/00
ACTIVE	U19031	-.--	3132-0000-002	IC,74S112,DUAL JK FLIP-FLOP	00/00
ACTIVE	U19032	-.--	3132-0000-002	IC,74S112,DUAL JK FLIP-FLOP	00/00
ACTIVE	Y19001	1.00	2363-0011-000	XTAL,100.000000MHZ,5 S,HC-18/U	00/00
ACTIVE	Y19002	1.00	2363-0036-000	XTAL,8.093000MHZ,F P,HC-18/U 3	00/00

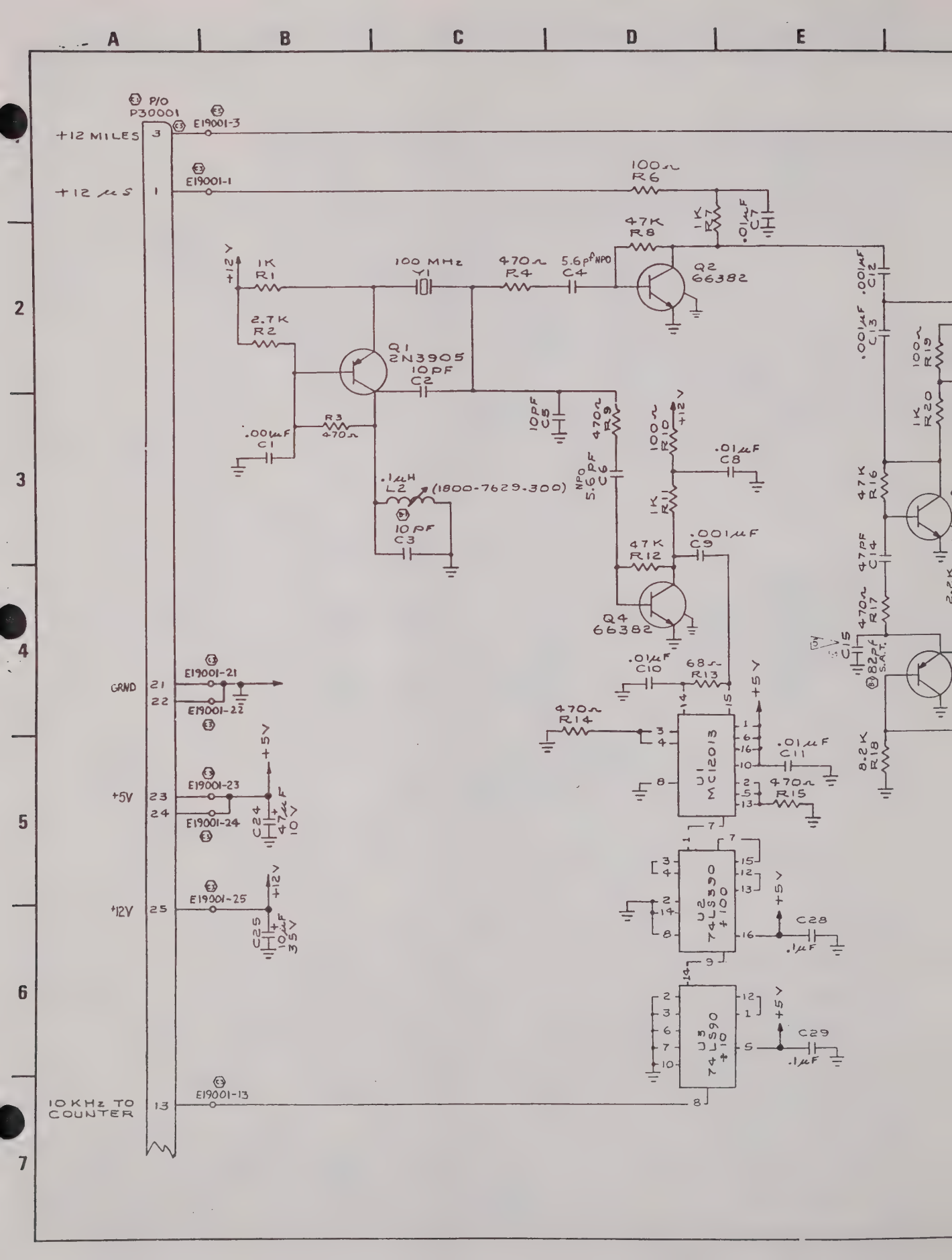
A
B
C
D
E
P/O P30001
E19001-3
+12 MILES
3
E19001-1
+12 μS
1
100Ω R6
47K R8
1K R7
.01μF C7
+12 V
1K R1
100 MHz Y1
470Ω R4
5.6pF NPO C4
Q2 66382
2.7K R2
Q1 2N3905
10PF C2
.001μF C12
.001μF C13
100Ω R19
1K R20
.00μF C1
R3 470Ω
10PF C5
470Ω R9
100Ω R10
.01μF C8
.1μH L2 (1800-7629-300)
10 PF C3
NPO 5.6PF C6
1K R11
47K R16
47K R12
.001μF C9
47PF C14
Q4 66382
470Ω R17
5V
C15
82PF S.A.T.
E19001-21
GRND
21
22
E19001-22
.01μF C10
68Ω R13
+5 V
470Ω R14
U1 MC12013
.01μF C11
8.2K R18
470Ω R15
E19001-23
+5V
23
24
E19001-24
C24 47μF 10V
U2 74LS390 ÷100
C28 .1μF
E19001-25
+12V
25
C25 10μF 35V
U3 74LS90 ÷10
C29 .1μF
E19001-13
10 KHz TO COUNTER
13

DATE	REV	CHANGE	APP'D
1/4/85	B	UPDATED DWG AO	[illegible]
1/11/85	B	PRODUCTION RELEASE ECN 6490	VH
3-26-85	C	INC ECN #6838 R.W.	TE
8-1-85	C-1	INC ECN 7241 AO	DS
8/27/85	C2	INC RC 7517 TE	VLH
10/11/85	C-3	INC RC 7797 JS	DAH
1/2/86	C-4	INC RC 8127 DAH	OJ
1/14/86	C5	INC RC 8097 DAH	JS
2-6-86	C-6	INC ECN 7631 JS	VLH
3/27/86	C-7	INC RC 8465 WOW	VLH
3-24-88	D	INC RC 10864 AO	VLH
	E	REF ONLY ECN 12357	
6-7-90	F	PER ECN 13235 TO TRACK WITH PCB; ALSO INC ECN 12762 AO	TP
7-9-90	F-1	INC RC 13526 AO	BP
11-8-90	F-2	INC ECN 13782 AO	BP

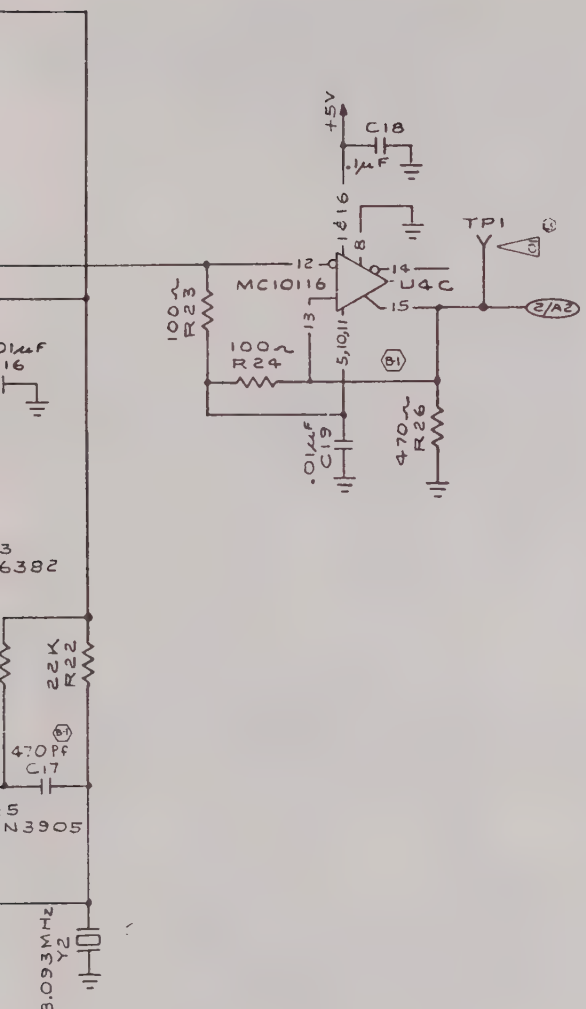

STANDARDS:
(UNLESS OTHERWISE NOTED:)

1. ALL REF DES CARRY AN ASSIGNED DESIGNATOR SERIES. THIS SCHEMATIC CARRIES SERIES 19XXX (E.G., R1 IS 19001).
2. ALL RESISTORS ARE 1/4 W, 5%.
3. ALL RESISTANCE IS EXPRESSED IN OHMS.
4. ALL CAPACITANCE IS EXPRESSED IN MICROFARADS.

NOTES:

1. LAST REF DES USED:

J2	Q11	Y2
C56	TP1	E1
CR4	R53	P30001
L2	U32	

2. REF DES NOT USED:

L1	R25	J1

3. REF DES OUT OF SEQ:

C24 — 1/B5	C44 — 3/B6
C25 — 1/B6	C45 — 3/D3
C26 — 2/B3	C46 — 3/C5
C27 — 3/B3	C47 — 3/D4
C28 — 1/E6	C48 — 3/D5
C29 — 1/E6	C49 — 3/E3
C30 — 2/C2	C50 — 3/F3
C31 — 2/A6	C51 — 3/F4
C32 — 2/C5	C52 — 3/G3
C33 — 2/D3	C53 — 3/G4
C34 — 2/D5	C54 — 3/H6
C35 — 2/D7	C55 — 3/H2
C36 — 2/E3	C56 — 3/F4
C37 — 2/F5	
C38 — 2/F6	R5 — 2/A4
C39 — 2/G3	R32 — 2/A3
C40 — 2/G5	R50 — 2/A3
C41 — 2/H2	R51 — 3/A3
C42 — 2/J4	R52 — 3/A3
C43 — 3/C2	R53 — 3/A4

4. FUNCTIONS NOT USED:

C2 5 C15 (SAT) TUNES OSCILLATOR 1 CIRCUIT TO 8.091269 MHz AT TP1; NOMINAL: 82pf, RANGE: 68pf TO 100pf

SEE SEPARATE BILL OF MATERIALS

7010-4930-300	RD-301	TOLERANCES UNLESS OTHERWISE SPECIFIED ALL DIMENSIONS APPLY AFTER FINISH DECIMALS .XX ± 0.010 .XXX ± 0.005 ANGLES ± 1/2° FRACTIONS ± 1/64 SURFACE ROUGHNESS REMOVE ALL BURRS DRAWING NOT TO BE SCALED	DRAWN [illegible] DATE 3-14-85 CHECKED [illegible] DATE 1-10-85 APPROVED [illegible] DATE [illegible]	- IFR INC - WICHITA, KANSAS TITLE SCHEMATIC-RANGE BD NO. 1 49-103
NEXT ASSY	MODEL	MATERIAL ~	SIZE D PART NUMBER 0000-4910-300 REV F2
APPLICATION		FINISH ~	SCALE ~ WEIGHT ~ SHEET 1 OF 3

(11)

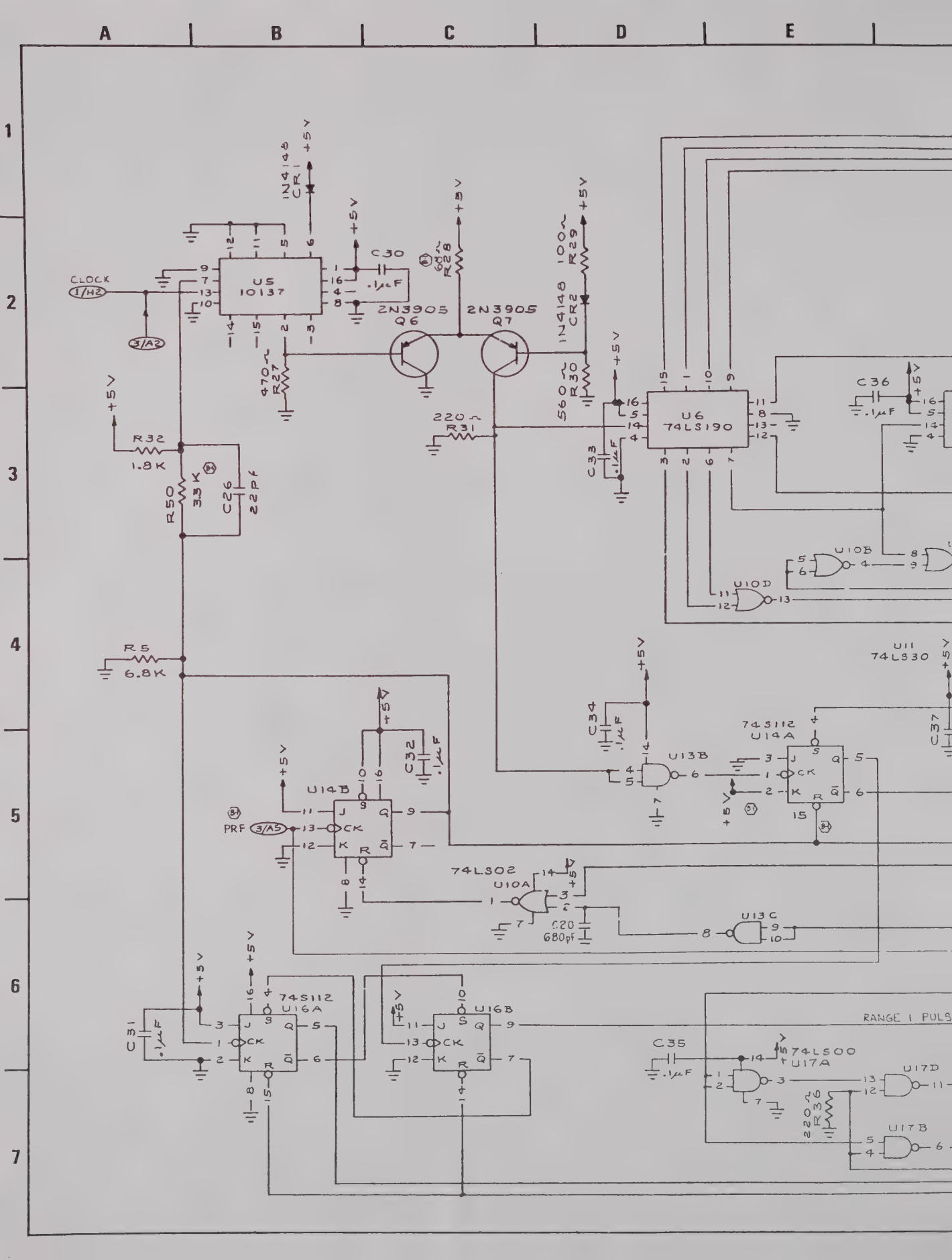
A
B
C
D
E
1
2
3
4
5
6
7
CLOCK
1/H2
3/A2
U5
10137
1N4148
CR1
+5V
C30
.1μF
2N3905
Q6
2N3905
Q7
R28
680Ω
R29
100Ω
1N4148
CR2
R27
470Ω
R30
560Ω
R31
220Ω
U6
74LS190
C33
.1μF
C36
.1μF
U10B
U10D
R32
1.8K
R50
3.3K
C26
22pF
R5
6.8K
C34
.1μF
U13B
U11
74LS30
C37
74S112
U14A
U14B
C32
.1μF
PRF
3/A5
74LS02
U10A
C20
680pf
U13C
C31
.1μF
74S112
U16A
U16B
RANGE 1 PULS
C35
.1μF
74LS00
U17A
U17D
R36
220Ω
U17B

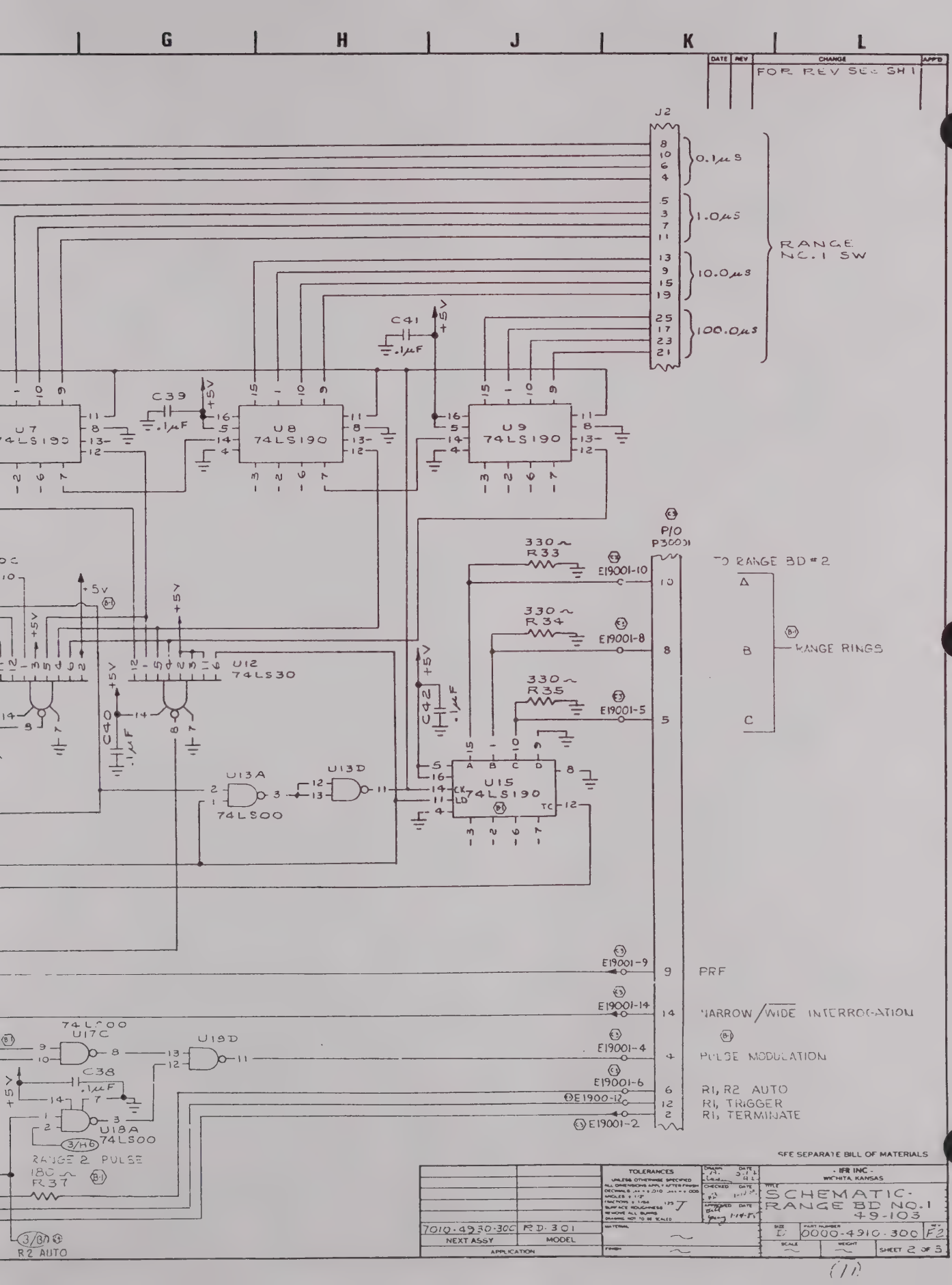
G
H
J
K
L
DATE
REV
CHANGE
APP'D
FOR REV SEE SH 1
J2
0.1μS
1.0μS
10.0μS
100.0μS
RANGE NO.1 SW
C41
.1μF
+5V
C39
U7
74LS190
U8
74LS190
U9
74LS190
P10
P3001
330Ω
R33
R34
R35
E19001-10
E19001-8
E19001-5
TO RANGE BD #2
A
B
C
RANGE RINGS
C42
U12
74LS30
C40
U13A
U13D
74LS00
U15
74LS190
CK
LD
TC
E19001-9
PRF
E19001-14
NARROW/WIDE INTERROGATION
E19001-4
PULSE MODULATION
E19001-6
R1, R2 AUTO
E1900-12
R1, TRIGGER
E19001-2
R1, TERMINATE
74LS00
U17C
U19D
C38
.1μF
U18A
74LS00
3/H6
RANGE 2 PULSE
180Ω
R37
3/B7
R2 AUTO
SEE SEPARATE BILL OF MATERIALS
TOLERANCES
UNLESS OTHERWISE SPECIFIED
- IFR INC -
WICHITA, KANSAS
SCHEMATIC-
RANGE BD NO.1
49-103
7010-4930-300
RD-301
NEXT ASSY
MODEL
APPLICATION
0000-4910-300
F2
SHEET 2 OF 3

(11)

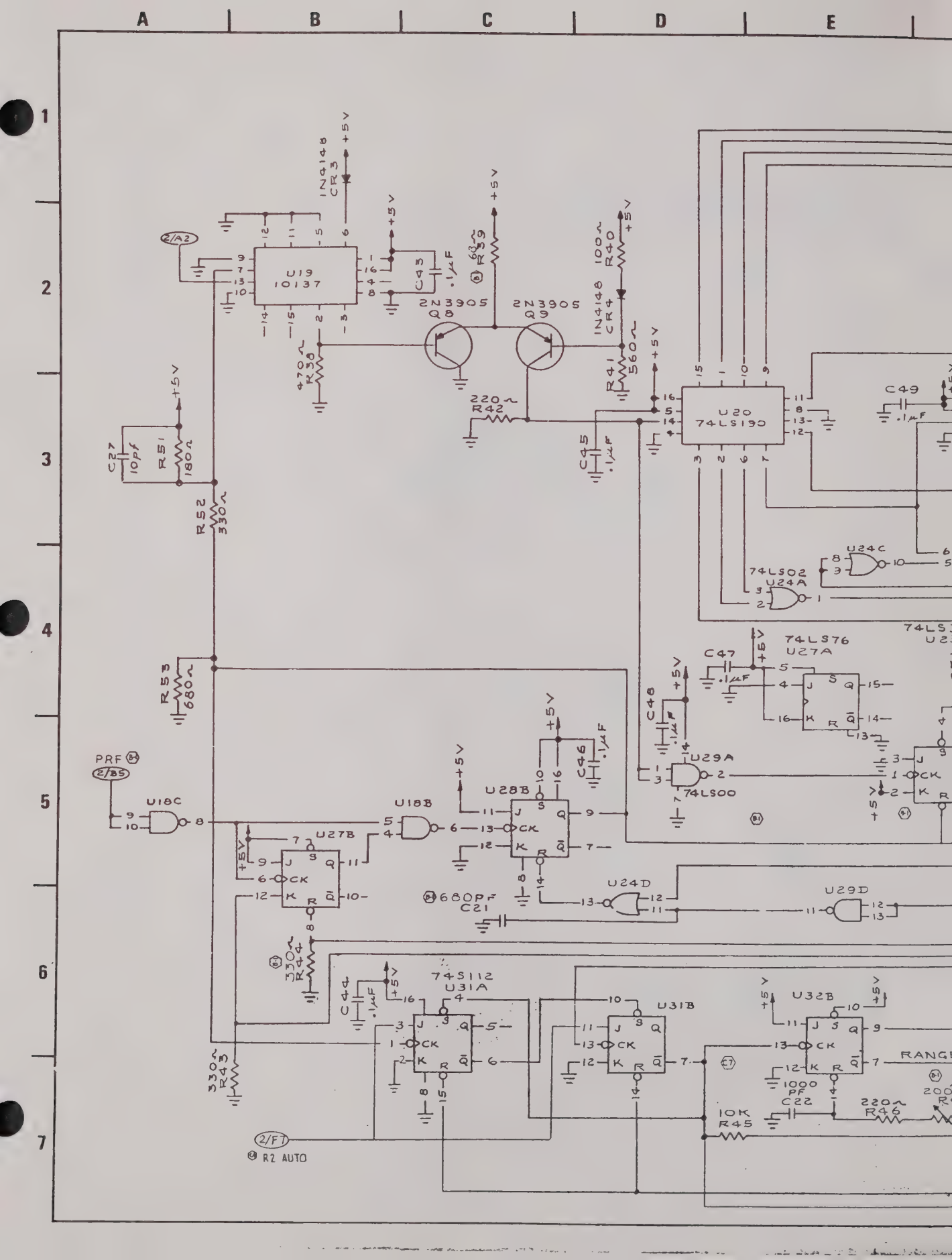
A
B
C
D
E
1
2
3
4
5
6
7
U19
10137
IN4148
CR3
+5V
C43
.1μF
2N3905
Q8
2N3905
Q9
R39
68Ω
R40
100Ω
IN4148
CR4
R41
560Ω
R38
470Ω
R42
220Ω
C45
.1μF
U20
74LS190
C49
.1μF
74LS02
U24A
U24C
C27
10pF
R51
180Ω
R52
330Ω
R53
680Ω
C47
.1μF
74LS76
U27A
C48
.1μF
U29A
74LS00
U28B
C46
.1μF
U18C
U18B
U27B
U24D
U29D
680PF
C21
330Ω
R44
C44
.1μF
74S112
U31A
U31B
U32B
330Ω
R43
1000
PF
C22
220Ω
R46
10K
R45
RANGE
2/A2
2/B5
2/F7
R2 AUTO

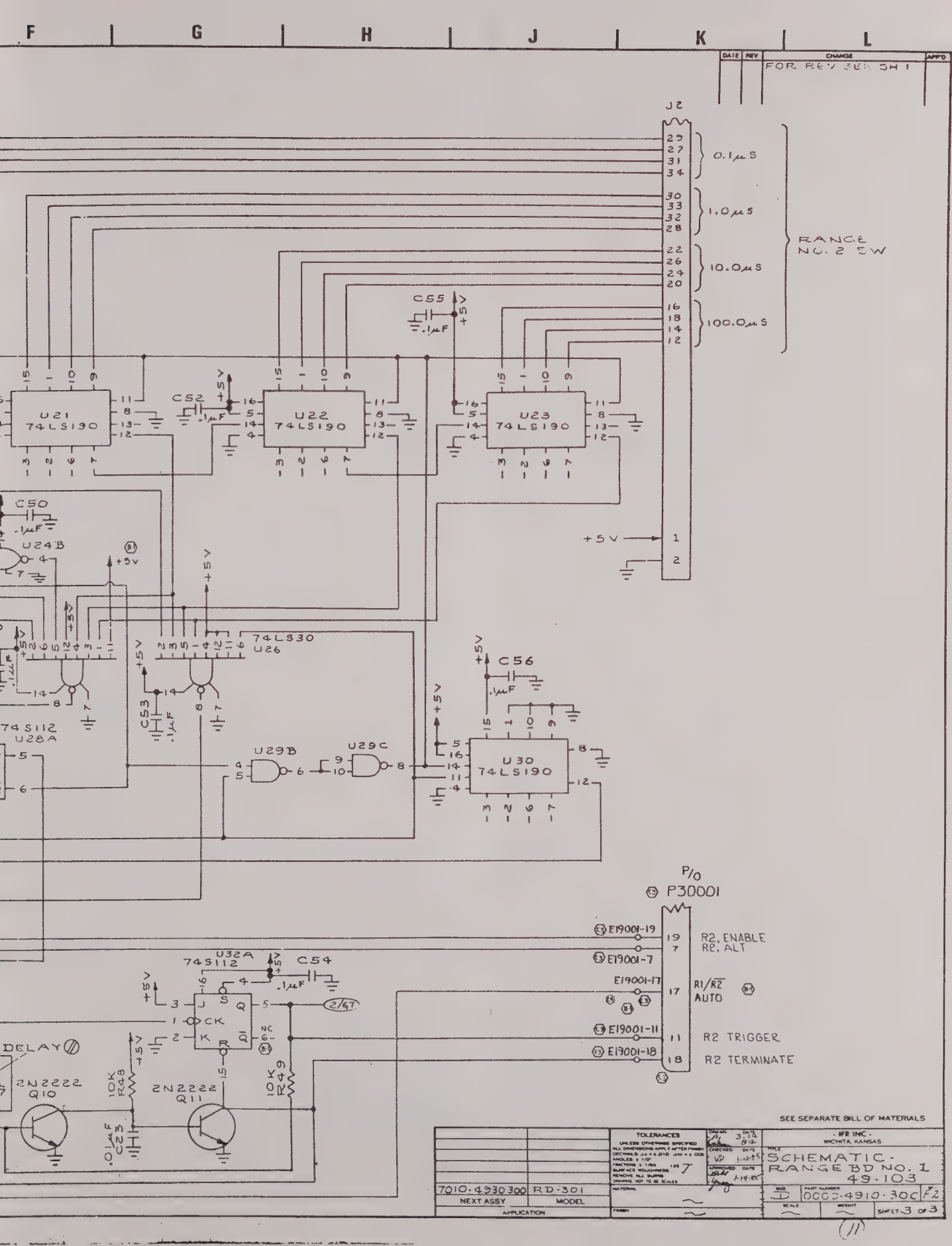
F
G
H
J
K
L
DATE
REV
CHANGE
APPD
FOR REV SEE SH 1
J2
29
27
31
34
0.1μS
30
33
32
28
1.0μS
22
26
24
20
10.0μS
16
18
14
12
100.0μS
RANGE NO. 2 SW
+5V
1
2
U21 74LS190
U22 74LS190
U23 74LS190
C52 .1μF
C55 .1μF
C50 .1μF
U24B
74LS30 U26
C53 .1μF
74S112 U28A
U29B
U29C
C56 .1μF
U30 74LS190
P/O P30001
E19001-19
19
R2, ENABLE
E19001-7
7
R2, ALT
E19001-17
17
R1/R2 AUTO
E19001-11
11
R2 TRIGGER
E19001-18
18
R2 TERMINATE
U32A 74S112
C54 .1μF
2/67
DELAY
2N2222 Q10
2N2222 Q11
10K R48
10K R49
.01μF C23
SEE SEPARATE BILL OF MATERIALS
TOLERANCES
UNLESS OTHERWISE SPECIFIED
ALL DIMENSIONS APPLY AFTER FINISH
DECIMALS .XX ± .010 .XXX ± .005
ANGLES ± 1/2°
FRACTIONS ± 1/64
SURFACE ROUGHNESS
REMOVE ALL BURRS
DRAWING NOT TO BE SCALED
DRAWN 3-12-82
CHECKED 1-10-85
APPROVED 1-14-85
MATERIAL
FINISH
- HFR INC. -
WICHITA, KANSAS
TITLE
SCHEMATIC - RANGE BD NO. 1
49-103
7010-4930300
NEXT ASSY
RD-301
MODEL
APPLICATION
SIZE D
PART NUMBER 0000-4910-30C
REV F2
SCALE
WEIGHT
SHEET 3 OF 3
11

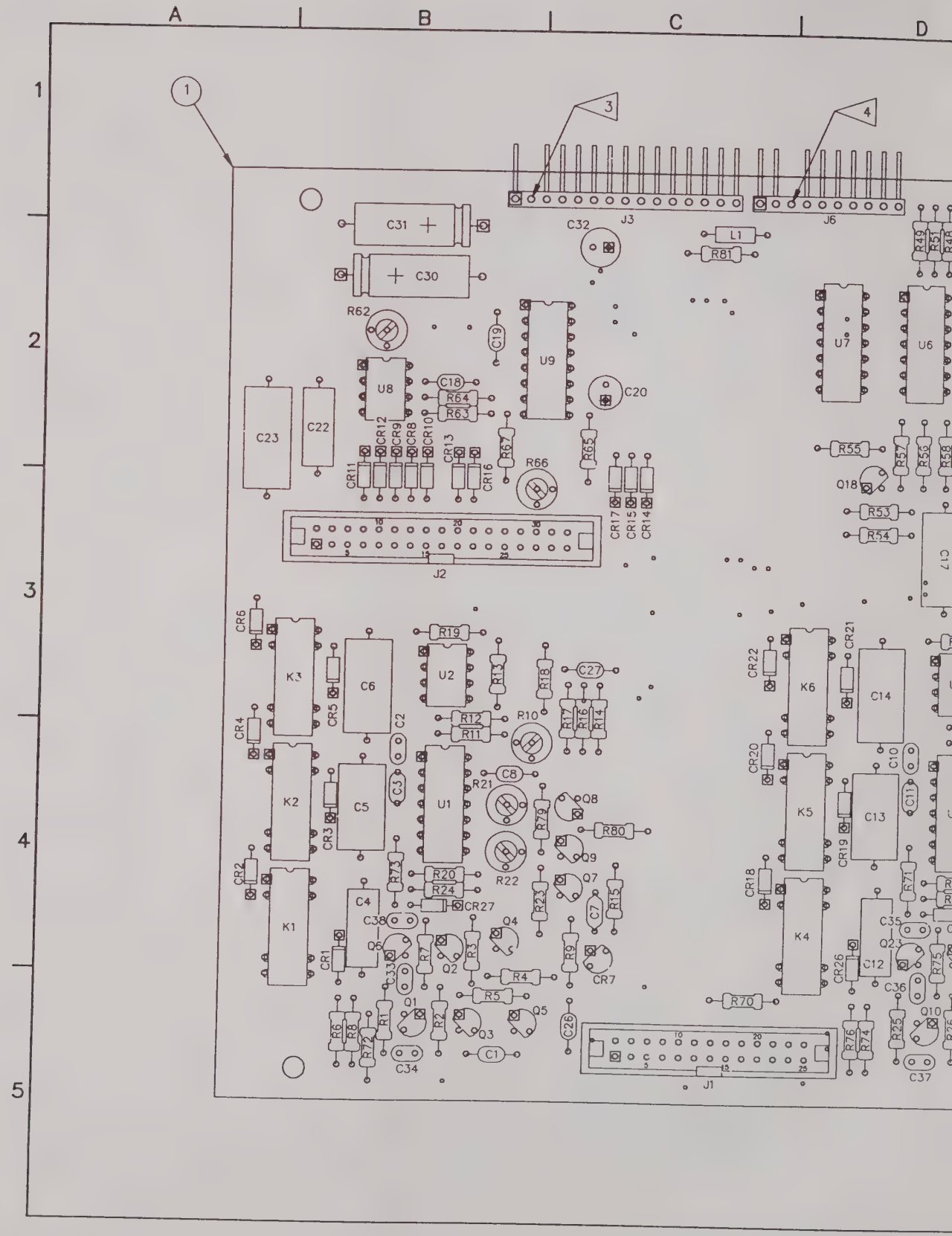
A
B
C
D
1
2
3
4
5
1
3
4
J3
J6
C31
C30
C32
L1
R81
R49
R51
R48
R62
C19
U9
U7
U6
U8
C18
R64
R63
C20
C23
C22
CR12
CR9
CR8
CR10
CR13
R67
R65
R55
R57
R56
R58
CR11
CR16
R66
Q18
CR17
CR15
CR14
R53
R54
C17
J2
CR6
K3
C6
R19
U2
R13
R18
C27
CR22
K6
CR21
C14
CR5
C2
R12
R11
R10
R17
R16
R14
CR4
K2
C5
C3
U1
C8
R21
Q8
R79
R80
CR20
K5
C13
C10
C11
CR3
Q9
CR2
R73
R20
R24
R22
Q7
R23
C7
R15
CR18
K4
R71
K1
C4
CR27
C38
Q4
C35
Q6
R7
Q2
R3
R9
CR7
Q23
CR1
C33
R4
CR26
C12
R75
C36
R5
R70
Q1
Q5
Q10
R6
R8
R1
R2
Q3
C26
R76
R74
R25
R72
C34
C1
J1
C37

E F G

DATE	REV	CHANGE	APVD
11/13/90	A	PROD. REL. PER ECN 13840	BP

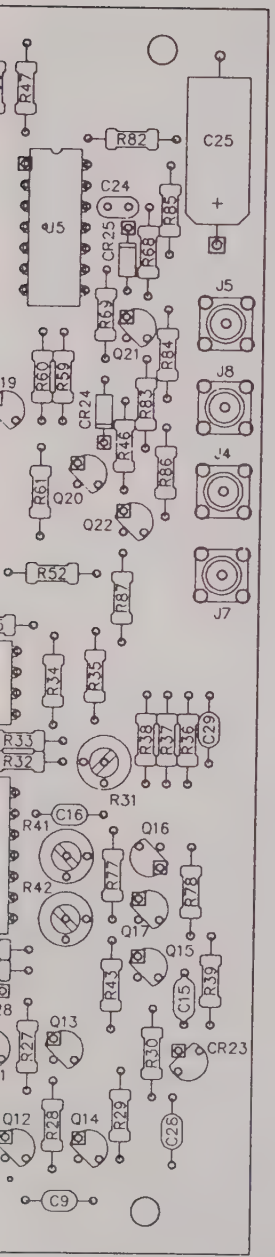

NOTES:

1. ALL REFERENCE DESIGNATORS CARRY AN ASSIGNED DESIGNATOR SERIES, THIS DWG. CARRIES SERIES 30000 (i.e., R1 IS R30001).
2. REFERENCE SCHEMATIC: 0000-4933-100

3 REMOVE PIN 2 FROM J3.

4 REMOVE PIN 3 FROM J6.

IFR SYSTEMS INC
10200 West York St., Wichita, Kansas 67215

DRAWN / DATE	SIGLER 8-10-90
CHECKED / DATE	S. McELROY 11-13-90
APPROVED / DATE	J. SCHMIDT 11-13-90
TITLE	PCB ASSEMBLY, RANGE BOARD #2
SIZE	C
DWG. NO.	7010-4933-100
REV	A
SCALE:	2:1
DO NOT SCALE	
CAGE	51190
SHEET	1 OF 1

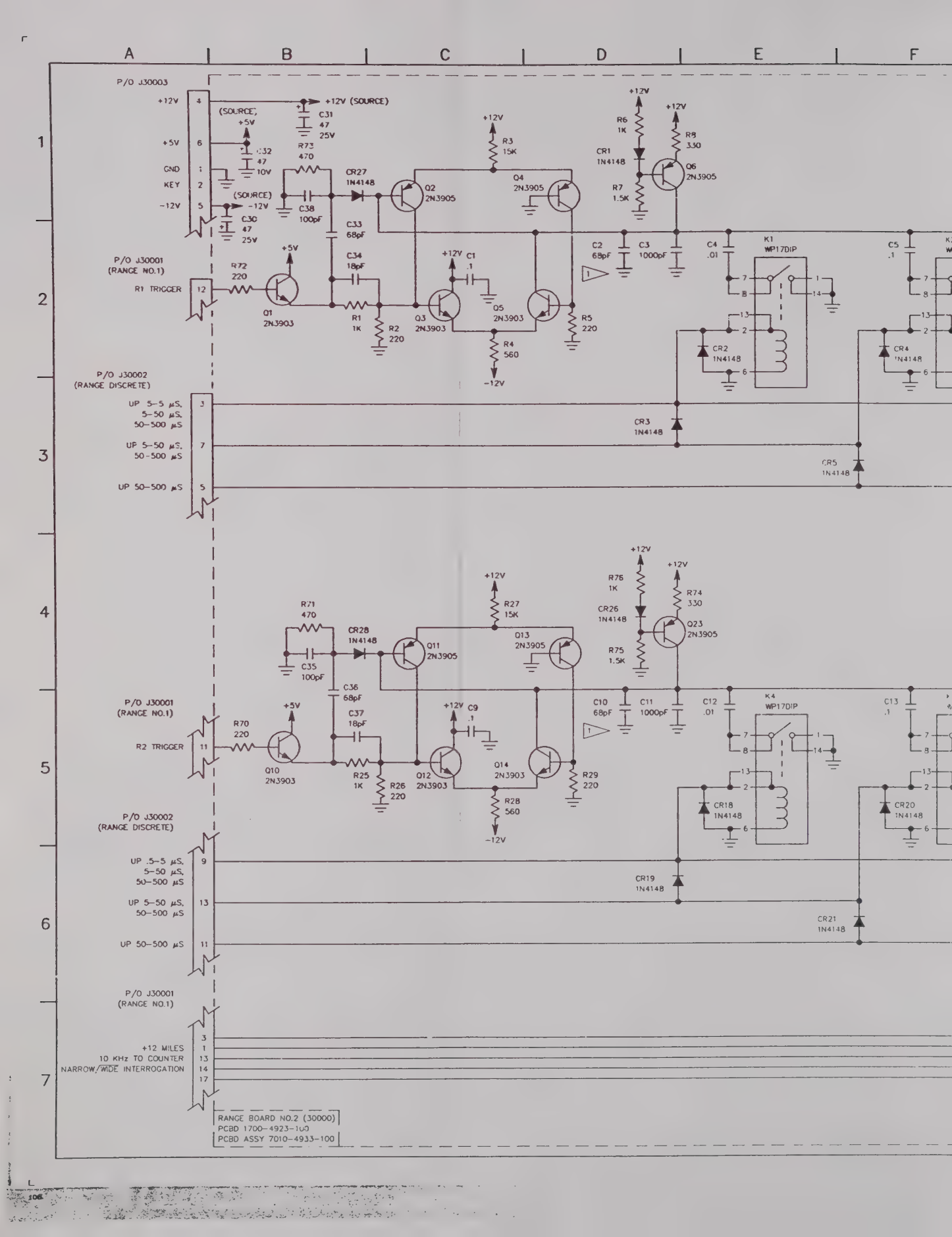
A
B
C
D
E
F
1
2
3
4
5
6
7
P/O J30003
+12V
+5V
GND
KEY
-12V
+12V (SOURCE)
(SOURCE) +5V
(SOURCE) -12V
C31 47 25V
C32 47 10V
C30 47 25V
R73 470
C38 100pF
CR27 1N4148
C33 68pF
C34 18pF
R72 220
Q1 2N3903
R1 1K
R2 220
Q2 2N3905
Q3 2N3903
R3 15K
Q4 2N3905
Q5 2N3903
R4 560
R5 220
C1 .1
R6 1K
R7 1.5K
CR1 1N4148
R8 330
Q6 2N3905
C2 68pF
C3 1000pF
C4 .01
K1 WP17DIP
C5 .1
CR2 1N4148
CR4 1N4148
P/O J30001 (RANGE NO.1)
R1 TRIGGER
P/O J30002 (RANGE DISCRETE)
UP 5-5 µS, 5-50 µS, 50-500 µS
UP 5-50 µS, 50-500 µS
UP 50-500 µS
CR3 1N4148
CR5 1N4148
R71 470
C35 100pF
CR28 1N4148
C36 68pF
C37 18pF
R70 220
Q10 2N3903
R25 1K
R26 220
Q11 2N3905
Q12 2N3903
R27 15K
Q13 2N3905
Q14 2N3903
R28 560
R29 220
C9 .1
R75 1K
CR26 1N4148
R74 330
Q23 2N3905
R75 1.5K
C10 68pF
C11 1000pF
C12 .01
K4 WP17DIP
C13 .1
CR18 1N4148
CR20 1N4148
P/O J30001 (RANGE NO.1)
R2 TRIGGER
P/O J30002 (RANGE DISCRETE)
UP .5-5 µS, 5-50 µS, 50-500 µS
UP 5-50 µS, 50-500 µS
UP 50-500 µS
CR19 1N4148
CR21 1N4148
P/O J30001 (RANGE NO.1)
+12 MILES
10 KHz TO COUNTER
NARROW/WIDE INTERROGATION
RANGE BOARD NO.2 (30000)
PCBD 1700-4923-100
PCBD ASSY 7010-4933-100

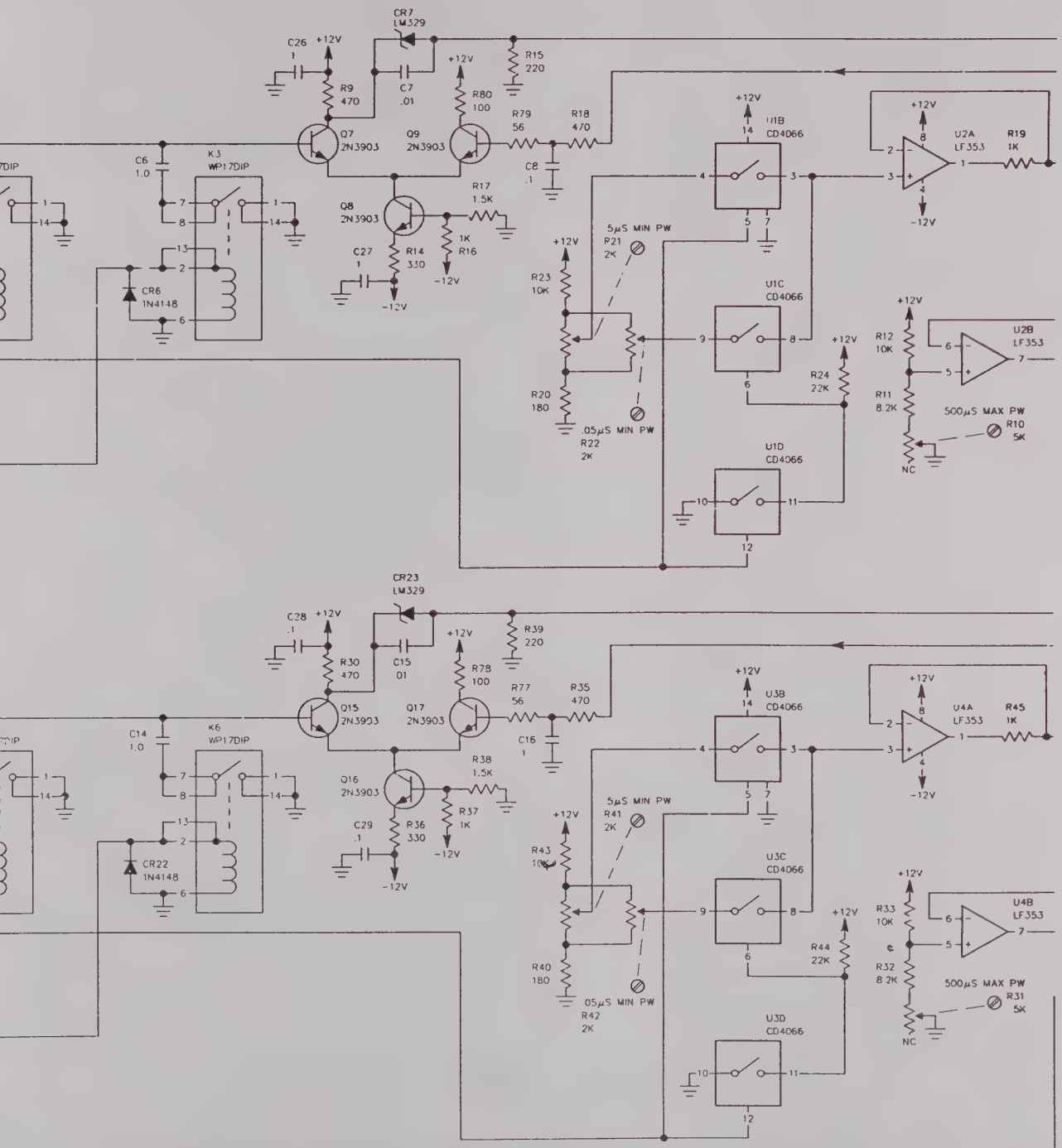
CR7
LM329
C26
1
+12V
R9
470
C7
.01
+12V
R80
100
R15
220
Q7
2N3903
Q9
2N3903
R79
56
R18
470
C8
.1
C6
1.0
K3
WP17DIP
Q8
2N3903
R17
1.5K
1K
R16
C27
1
R14
330
-12V
CR6
1N4148
+12V
U1B
CD4066
U2A
LF353
R19
1K
-12V
5μS MIN PW
R21
2K
R23
10K
U1C
CD4066
R12
10K
U2B
LF353
R24
22K
R11
8.2K
500μS MAX PW
R10
5K
R20
180
.05μS MIN PW
R22
2K
NC
U1D
CD4066
CR23
LM329
C28
.1
R30
470
C15
01
R39
220
R78
100
Q15
2N3903
Q17
2N3903
R77
56
R35
470
C16
1
C14
1.0
K6
WP17DIP
R38
1.5K
Q16
2N3903
R37
1K
C29
.1
R36
330
CR22
1N4148
U3B
CD4066
U4A
LF353
R45
1K
5μS MIN PW
R41
2K
R43
10K
U3C
CD4066
R33
10K
U4B
LF353
R44
22K
R32
8.2K
500μS MAX PW
R31
5K
R40
180
.05μS MIN PW
R42
2K
NC
U3D
CD4066

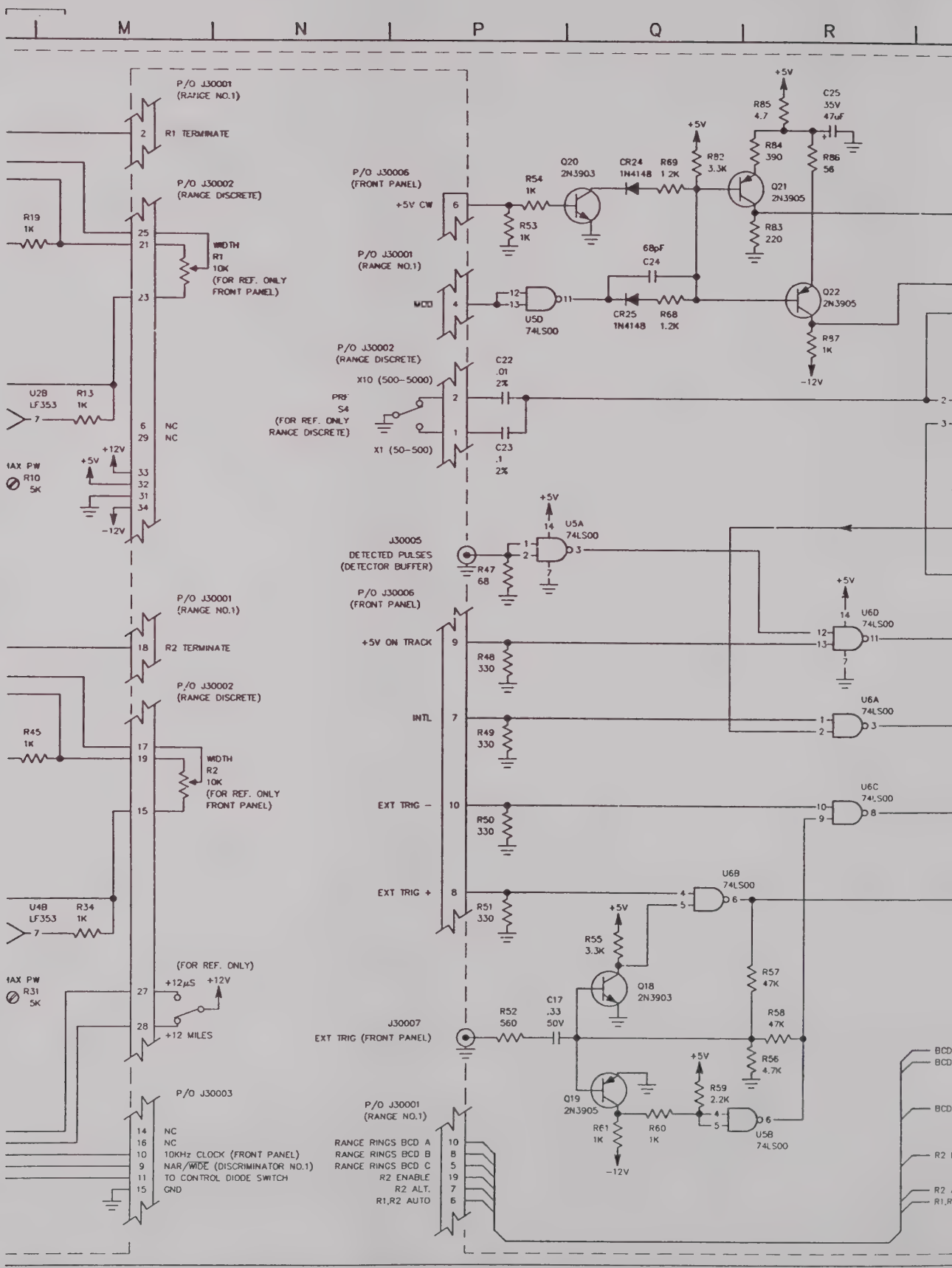
M
N
P
Q
R
P/O J30001 (RANGE NO.1)
R1 TERMINATE
P/O J30002 (RANGE DISCRETE)
R19 1K
WIDTH R1 10K (FOR REF. ONLY FRONT PANEL)
U2B LF353
R13 1K
NC
NC
MAX PW R10 5K
+5V
+12V
-12V
P/O J30001 (RANGE NO.1)
R2 TERMINATE
P/O J30002 (RANGE DISCRETE)
R45 1K
WIDTH R2 10K (FOR REF. ONLY FRONT PANEL)
U4B LF353
R34 1K
MAX PW R31 5K
(FOR REF. ONLY)
+12µS
+12V
+12 MILES
P/O J30003
NC
NC
10KHz CLOCK (FRONT PANEL)
NAR/WIDE (DISCRIMINATOR NO.1)
TO CONTROL DIODE SWITCH
GND
P/O J30006 (FRONT PANEL)
+5V CW
R54 1K
R53 1K
Q20 2N3903
CR24 1N4148
R69 1.2K
R82 3.3K
R85 4.7
C25 35V 47uF
R84 390
R86 56
Q21 2N3905
R83 220
P/O J30001 (RANGE NO.1)
WCO
68pF C24
U5D 74LS00
CR25 1N4148
R68 1.2K
Q22 2N3905
R87 1K
P/O J30002 (RANGE DISCRETE)
X10 (500-5000)
PRS
S4
(FOR REF. ONLY RANGE DISCRETE)
X1 (50-500)
C22 .01 2%
C23 .1 2%
J30005 DETECTED PULSES (DETECTOR BUFFER)
R47 68
U5A 74LS00
P/O J30006 (FRONT PANEL)
+5V ON TRACK
R48 330
INTL
R49 330
EXT TRIG -
R50 330
EXT TRIG +
R51 330
U6D 74LS00
U6A 74LS00
U6C 74LS00
U6B 74LS00
R55 3.3K
Q18 2N3903
R57 47K
R58 47K
R56 4.7K
J30007 EXT TRIG (FRONT PANEL)
R52 560
C17 .33 50V
Q19 2N3905
R59 2.2K
R61 1K
R60 1K
U5B 74LS00
P/O J30001 (RANGE NO.1)
RANGE RINGS BCD A
RANGE RINGS BCD B
RANGE RINGS BCD C
R2 ENABLE
R2 ALT.
R1,R2 AUTO
BCD
BCD
BCD
R2
R2
R1,R

S T U V W X

DATE	REV	CHANGE	APVD
11-13-90	A	PRODUCTION RELEASED PER ECN#13840 RGC	

P/O J30006
2 NC
3 KEY
4 NC
5 +5V
1 GND

J30008
DELAYED SYNC (FRONT PANEL)

P/O J30003
12 MOD (IF GEN AMP)
13 MOD (MAIN DIODE SWITCH)

R81 330
L1 .68uH

R63 21.5K 1%
C18 .1
C19 .1
U8 CA3130
U9A CD4049
U9B CD4049
U9C CD4049
U9D CD4049
U9E CD4049
U9F CD4049
R64 4.7K
DUTY CYCLE R62 100K
R67 56

P/O J30002
(RANGE DISCRETE)
26
4
24
INTL PRF/AM R4 10K (FOR REF. ONLY)

R65 1.8K
C20 10 25V
HIGH END ADJ R66 1K
R46 100
U5C 74LS00

J30004
SYNC (FRONT PANEL)

P/O J30001
(RANGE NO.1)
25 +12V
24 +5V
23 +5V
22 GND
21 GND
26 -12V
15 NC
16 NC
20 NC
9 PRF

U7B 74LS20

P/O J30003
8 PRF TO COUNTER (FRONT PANEL)
3 INTL AM (AGC)
7 CONTOUR (AGC)

P/O J30002
(RANGE DISCRETE)
10 CONTOUR
18 NO.1
22 NO.2
20 NO.3
30 NO.4
8 NO.5
16 R2 ON
12 R2 ALT
14 R1,R2 AUTO

CR8 1N4148
CR9 1N4148
CR10 1N4148
CR11 1N4148
CR12 1N4148
CR13 1N4148
CR14 1N4148
CR15 1N4148
CR16 1N4148
CR17 1N4148

NOTES:
(UNLESS OTHERWISE SPECIFIED)

1. ALL REFERENCE NUMBERS CARRY AN ASSIGNED DESIGNATOR SERIES.
   THIS SCHEMATIC CARRIES SERIES: 30000
2. ALL RESISTORS ARE 5%, 1/4W.
3. ALL RESISTANCE IS EXPRESSED IN OHMS.
   ALL CAPACITANCE IS EXPRESSED IN MICRO FARADS.
4. HIGHEST REFERENCE DESIGNATIONS.
   C38, CR28, J30008, K6, L1, Q23, R87, U9
5. REFERENCE DESIGNATIONS NOT USED.
   C21
6. IC FUNCTIONS NOT USED:

U1A CD4066
U3A CD4066
U7A 74LS20

1 C2 S.A.T. IS 0pF TO 120pF MINIMUM PULSE WIDTH
NOMINAL VALUE IS 68pF
C10 S.A.T. IS 0pF TO 120pF MINIMUM PULSE WIDTH
NOMINAL VALUE IS 68 pF

CAUTION:
CONTAINS PARTS AND ASSEMBLIES SUSCEPTIBLE TO DAMAGE BY ELECTROSTATIC DISCHARGE (ESD).

IFR SYSTEMS INC
10300 West York St., Wichita, Kansas 67215

DRAWN R.CHAPMAN	DATE 5-11-90	TITLE SCHEMATIC RANGE BOARD NO 2
CHECKED T.DeSMIT	DATE 8-24-90	
APPROVED J.SCHMIDT	DATE 8-24-90	SIZE G, DWG. NO. 0000-4933-100, REV A
SCALE	DO NOT SCALE	FSCM 51190, SHEET 1 OF 2

ASSY NO.	REVISION	DESCRIPTION	LAST ECN	DATE INC
7010-4933-100	A	PCB ASSY,RANGE BOARD #2	13840	11/13/90

STAT	REF.DES.	QTY	COMP. PART NO.	DESCRIPTION	EFFECTIVE
ACT	*01	1.00	1700-4923-100	PC BD,RANGE BOARD #2	00/00/00.
ACT	C30001	10.00	1521-0000-008	CAP,UF .10 50V,DIP ZSU *	00/00/00
ACT	C30002	5.00	1506-0680-017	CAP,PF 68, 100V,NPO, 5	00/00/00
ACT	C30003	2.00	1506-0102-017	CAP, pF 1000, 100V, NPO 5 *	00/00/00
ACT	C30004	3.00	1502-0103-010	CAP,UF .010, 50V,PC, 2	00/00/00
ACT	C30005	3.00	1502-0104-002	CAP,UF, .10, 50V,PCARB, 2 *	00/00/00
ACT	C30006	2.00	1502-0105-002	CAP,UF, 1.0, 50V,MPC 2	00/00/00
ACT	C30007	2.00	1501-0103-005	CAP,UF .010, 50V,DISC, 10	00/00/00
ACT	C30008	-.--	1521-0000-008	CAP,UF .10 50V,DIP ZSU *	00/00/00
ACT	C30009	-.--	1521-0000-008	CAP,UF .10 50V,DIP ZSU *	00/00/00
ACT	C30010	-.--	1506-0680-017	CAP,PF 68, 100V,NPO, 5	00/00/00
ACT	C30011	-.--	1506-0102-017	CAP, pF 1000, 100V, NPO 5 *	00/00/00
ACT	C30012	-.--	1502-0103-010	CAP,UF .010, 50V,PC, 2	00/00/00
ACT	C30013	-.--	1502-0104-002	CAP,UF, .10, 50V,PCARB, 2 *	00/00/00
ACT	C30014	-.--	1502-0105-002	CAP,UF, 1.0, 50V,MPC 2	00/00/00
ACT	C30015	-.--	1501-0103-005	CAP,UF .010, 50V,DISC, 10	00/00/00
ACT	C30016	-.--	1521-0000-008	CAP,UF .10 50V,DIP ZSU *	00/00/00
ACT	C30017	1.00	1502-0334-012	CAP,UF, .33, 50V,MPC, 5 *	00/00/00
ACT	C30018	-.--	1521-0000-008	CAP,UF .10 50V,DIP ZSU *	00/00/00
ACT	C30019	-.--	1521-0000-008	CAP,UF .10 50V,DIP ZSU *	00/00/00
ACT	C30020	1.00	1580-1000-200	CAP,UF, 10, 25V,ELE RDL	00/00/00
ACT	C30021	1.00	0002-0000-000	*** REF DESIG NOT USED ***	00/00/00
ACT	C30022	-.--	1502-0103-010	CAP,UF .010, 50V,PC, 2	00/00/00
ACT	C30023	-.--	1502-0104-002	CAP,UF, .10, 50V,PCARB, 2 *	00/00/00
ACT	C30024	-.--	1506-0680-017	CAP,PF 68, 100V,NPO, 5	00/00/00
ACT	C30025	1.00	1507-0476-018	CAP,UF 47, 35V,TANT, 20	00/00/00

ASSY NO.	REVISION	DESCRIPTION	LAST ECN	DATE INC
7010-4933-100	A	PCB ASSY,RANGE BOARD #2	13840	11/13/90

STAT	REF.DES.	QTY	COMP. PART NO.	DESCRIPTION	EFFECTIVE
ACT	C30026	-.--	1521-0000-008	CAP,UF .10 50V,DIP Z5U *	00/00/00
ACT	C30027	-.--	1521-0000-008	CAP,UF .10 50V,DIP Z5U *	00/00/00
ACT	C30028	-.--	1521-0000-008	CAP,UF .10 50V,DIP Z5U *	00/00/00
ACT	C30029	-.--	1521-0000-008	CAP,UF .10 50V,DIP Z5U *	00/00/00
ACT	C30030	2.00	1580-4700-215	CAP,UF 47, 25V,ELE, 30	00/00/00
ACT	C30031	-.--	1580-4700-215	CAP,UF 47, 25V,ELE, 30	00/00/00
ACT	C30032	1.00	1580-4702-105	CAP, UF 47, 10V, ELE RDL *	00/00/00
ACT	C30033	-.--	1506-0680-017	CAP,PF 68, 100V,NPO, 5	00/00/00
ACT	C30034	2.00	1506-0180-017	CAP,PF 18, 100V,NPO, 5	00/00/00
ACT	C30035	2.00	1506-0101-017	CAP,pF 100, 100V NPO 5 *	00/00/00
ACT	C30036	-.--	1506-0680-017	CAP,PF 68, 100V,NPO, 5	00/00/00
ACT	C30037	-.--	1506-0180-017	CAP,PF 18, 100V,NPO, 5	00/00/00
ACT	C30038	-.--	1506-0101-017	CAP,pF 100, 100V NPO 5 *	00/00/00
ACT	CR30001	26.00	4815-0000-003	DIODE, 1N4148 ,SIGNAL, 75PRV	00/00/00
ACT	CR30002	-.--	4815-0000-003	DIODE, 1N4148 ,SIGNAL, 75PRV	00/00/00
ACT	CR30003	-.--	4815-0000-003	DIODE, 1N4148 ,SIGNAL, 75PRV	00/00/00
ACT	CR30004	-.--	4815-0000-003	DIODE, 1N4148 ,SIGNAL, 75PRV	00/00/00
ACT	CR30005	-.--	4815-0000-003	DIODE, 1N4148 ,SIGNAL, 75PRV	00/00/00
ACT	CR30006	-.--	4815-0000-003	DIODE, 1N4148 ,SIGNAL, 75PRV	00/00/00
ACT	CR30007	2.00	4818-0000-015	DIODE,LM329C,6.9V ZENER REF *	00/00/00
ACT	CR30008	-.--	4815-0000-003	DIODE, 1N4148 ,SIGNAL, 75PRV	00/00/00
ACT	CR30009	-.--	4815-0000-003	DIODE, 1N4148 ,SIGNAL, 75PRV	00/00/00
ACT	CR30010	-.--	4815-0000-003	DIODE, 1N4148 ,SIGNAL, 75PRV	00/00/00
ACT	CR30011	-.--	4815-0000-003	DIODE, 1N4148 ,SIGNAL, 75PRV	00/00/00
ACT	CR30012	-.--	4815-0000-003	DIODE, 1N4148 ,SIGNAL, 75PRV	00/00/00
ACT	CR30013	-.--	4815-0000-003	DIODE, 1N4148 ,SIGNAL, 75PRV	00/00/00

ASSY NO.	REVISION	DESCRIPTION	LAST ECN	DATE INC
7010-4933-100	A	PCB ASSY,RANGE BOARD #2	13840	11/13/90

STAT	REF.DES.	QTY	COMP. PART NO.	DESCRIPTION	EFFECTIVE
ACT	CR30014	-.--	4815-0000-003	DIODE, 1N4148 ,SIGNAL, 75PRV	00/00/00
ACT	CR30015	-.--	4815-0000-003	DIODE, 1N4148 ,SIGNAL, 75PRV	00/00/00
ACT	CR30016	-.--	4815-0000-003	DIODE, 1N4148 ,SIGNAL, 75PRV	00/00/00
ACT	CR30017	-.--	4815-0000-003	DIODE, 1N4148 ,SIGNAL, 75PRV	00/00/00
ACT	CR30018	-.--	4815-0000-003	DIODE, 1N4148 ,SIGNAL, 75PRV	00/00/00
ACT	CR30019	-.--	4815-0000-003	DIODE, 1N4148 ,SIGNAL, 75PRV	00/00/00
ACT	CR30020	-.--	4815-0000-003	DIODE, 1N4148 ,SIGNAL, 75PRV	00/00/00
ACT	CR30021	-.--	4815-0000-003	DIODE, 1N4148 ,SIGNAL, 75PRV	00/00/00
ACT	CR30022	-.--	4815-0000-003	DIODE, 1N4148 ,SIGNAL, 75PRV	00/00/00
ACT	CR30023	-.--	4818-0000-015	DIODE,LM329C,6.9V ZENER REF *	00/00/00
ACT	CR30024	-.--	4815-0000-003	DIODE, 1N4148 ,SIGNAL, 75PRV	00/00/00
ACT	CR30025	-.--	4815-0000-003	DIODE, 1N4148 ,SIGNAL, 75PRV	00/00/00
ACT	CR30026	-.--	4815-0000-003	DIODE, 1N4148 ,SIGNAL, 75PRV	00/00/00
ACT	CR30027	-.--	4815-0000-003	DIODE, 1N4148 ,SIGNAL, 75PRV	00/00/00
ACT	CR30028	-.--	4815-0000-003	DIODE, 1N4148 ,SIGNAL, 75PRV	00/00/00
ACT	J30001	1.00	2129-1001-026	CONN,ANSLEY 609-2327 26-P M	00/00/00
ACT	J30002	1.00	2129-1001-034	CONN, 34P LO PRF HDR SHORT ST*	00/00/00
ACT	J30003	1.00	2115-1002-015	CONN,MOLEX 22-05-2151	00/00/00
ACT	J30004	4.00	2200-2010-400	CONN,M SMB,PC MTG,STR,.453LG	00/00/00
ACT	J30005	-.--	2200-2010-400	CONN,M SMB,PC MTG,STR,.453LG	00/00/00
ACT	J30006	1.00	2115-0000-020	WAFER,PCB,.100C,R.A,10-P	00/00/00
ACT	J30007	-.--	2200-2010-400	CONN,M SMB,PC MTG,STR,.453LG	00/00/00
ACT	J30008	-.--	2200-2010-400	CONN,M SMB,PC MTG,STR,.453LG	00/00/00
ACT	K30001	6.00	4501-0000-002	RELAY,DIP REED,SPST, 12VDC,.5A	00/00/00
ACT	K30002	-.--	4501-0000-002	RELAY,DIP REED,SPST, 12VDC,.5A	00/00/00
ACT	K30003	-.--	4501-0000-002	RELAY,DIP REED,SPST, 12VDC,.5A	00/00/00

ASSY NO.	REVISION	DESCRIPTION	LAST ECN	DATE INC
7010-4933-100	A	PCB ASSY,RANGE BOARD #2	13840	11/13/90

STAT	REF.DES.	QTY	COMP. PART NO.	DESCRIPTION	EFFECTIVE
ACT	K30004	-.--	4501-0000-002	RELAY,DIP REED,SPST, 12VDC,.5A	00/00/00
ACT	K30005	-.--	4501-0000-002	RELAY,DIP REED,SPST, 12VDC,.5A	00/00/00
ACT	K30006	-.--	4501-0000-002	RELAY,DIP REED,SPST, 12VDC,.5A	00/00/00
ACT	L30001	1.00	1801-0688-001	IND, .68UH,.6 OHM,1025-16	00/00/00
ACT	Q30001	14.00	4807-0000-001	TRANS, 2N3903 ,NPN HS SW	00/00/00
ACT	Q30002	9.00	4807-0000-002	TRANS, 2N3905 ,PNP HS SW	00/00/00
ACT	Q30003	-.--	4807-0000-001	TRANS, 2N3903 ,NPN HS SW	00/00/00
ACT	Q30004	-.--	4807-0000-002	TRANS, 2N3905 ,PNP HS SW	00/00/00
ACT	Q30005	-.--	4807-0000-001	TRANS, 2N3903 ,NPN HS SW	00/00/00
ACT	Q30006	-.--	4807-0000-002	TRANS, 2N3905 ,PNP HS SW	00/00/00
ACT	Q30007	-.--	4807-0000-001	TRANS, 2N3903 ,NPN HS SW	00/00/00
ACT	Q30008	-.--	4807-0000-001	TRANS, 2N3903 ,NPN HS SW	00/00/00
ACT	Q30009	-.--	4807-0000-001	TRANS, 2N3903 ,NPN HS SW	00/00/00
ACT	Q30010	-.--	4807-0000-001	TRANS, 2N3903 ,NPN HS SW	00/00/00
ACT	Q30011	-.--	4807-0000-002	TRANS, 2N3905 ,PNP HS SW	00/00/00
ACT	Q30012	-.--	4807-0000-001	TRANS, 2N3903 ,NPN HS SW	00/00/00
ACT	Q30013	-.--	4807-0000-002	TRANS, 2N3905 ,PNP HS SW	00/00/00
ACT	Q30014	-.--	4807-0000-001	TRANS, 2N3903 ,NPN HS SW	00/00/00
ACT	Q30015	-.--	4807-0000-001	TRANS, 2N3903 ,NPN HS SW	00/00/00
ACT	Q30016	-.--	4807-0000-001	TRANS, 2N3903 ,NPN HS SW	00/00/00
ACT	Q30017	-.--	4807-0000-001	TRANS, 2N3903 ,NPN HS SW	00/00/00
ACT	Q30018	-.--	4807-0000-001	TRANS, 2N3903 ,NPN HS SW	00/00/00
ACT	Q30019	-.--	4807-0000-002	TRANS, 2N3905 ,PNP HS SW	00/00/00
ACT	Q30020	-.--	4807-0000-001	TRANS, 2N3903 ,NPN HS SW	00/00/00
ACT	Q30021	-.--	4807-0000-002	TRANS, 2N3905 ,PNP HS SW	00/00/00
ACT	Q30022	-.--	4807-0000-002	TRANS, 2N3905 ,PNP HS SW	00/00/00

ASSY NO.	REVISION	DESCRIPTION	LAST ECN	DATE INC
7010-4933-100	A	PCB ASSY,RANGE BOARD #2	13840	11/13/90

STAT	REF.DES.	QTY	COMP. PART NO.	DESCRIPTION			EFFECTIVE
ACT	Q30023	-.--	4807-0000-002	TRANS, 2N3905 ,PNP HS SW			00/00/00
ACT	R30001	15.00	4702-0102-003	RES, 5, 1/4W, 1.0K	OHM		00/00/00
ACT	R30002	9.00	4702-0221-003	RES, 5, 1/4W 220 OHM		*	00/00/00
ACT	R30003	2.00	4702-0153-003	RES, 5, 1/4W, 15K	OHM		00/00/00
ACT	R30004	3.00	4702-0561-003	RES, 5, 1/4W, 560	OHM		00/00/00
ACT	R30005	-.--	4702-0221-003	RES, 5, 1/4W 220 OHM		*	00/00/00
ACT	R30006	-.--	4702-0102-003	RES, 5, 1/4W, 1.0K	OHM		00/00/00
ACT	R30007	4.00	4702-0152-003	RES, 5, 1/4W, 1.5K	OHM		00/00/00
ACT	R30008	9.00	4702-0331-003	RES, 5%, 1/4W 330 OHM		*	00/00/00
ACT	R30009	6.00	4702-0471-003	RES, 5, 1/4W, 470	OHM		00/00/00
ACT	R30010	2.00	4752-0502-002	POT 5K OHM			00/00/00
ACT	R30011	2.00	4702-0822-003	RES, 5, 1/4W, 8.2K	OHM		00/00/00
ACT	R30012	4.00	4702-0103-003	RES,5, 1/4W 10K OHM		*	00/00/00
ACT	R30013	-.--	4702-0102-003	RES, 5, 1/4W, 1.0K	OHM		00/00/00
ACT	R30014	-.--	4702-0331-003	RES, 5%, 1/4W 330 OHM		*	00/00/00
ACT	R30015	-.--	4702-0221-003	RES, 5, 1/4W 220 OHM		*	00/00/00
ACT	R30016	-.--	4702-0102-003	RES, 5, 1/4W, 1.0K	OHM		00/00/00
ACT	R30017	-.--	4702-0152-003	RES, 5, 1/4W, 1.5K	OHM		00/00/00
ACT	R30018	-.--	4702-0471-003	RES, 5, 1/4W, 470	OHM		00/00/00
ACT	R30019	-.--	4702-0102-003	RES, 5, 1/4W, 1.0K	OHM		00/00/00
ACT	R30020	2.00	4702-0181-003	RES, 5, 1/4W, 180	OHM		00/00/00
ACT	R30021	4.00	4752-0202-002	POT, 2K OHM			00/00/00
ACT	R30022	-.--	4752-0202-002	POT, 2K OHM			00/00/00
ACT	R30023	-.--	4702-0103-003	RES,5, 1/4W 10K OHM		*	00/00/00
ACT	R30024	2.00	4702-0223-003	RES, 5%, 1/4W 22K OHM		*	00/00/00
ACT	R30025	-.--	4702-0102-003	RES, 5, 1/4W, 1.0K	OHM		00/00/00

ASSY NO.	REVISION	DESCRIPTION	LAST ECN	DATE INC
7010-4933-100	A	PCB ASSY,RANGE BOARD #2	13840	11/13/90

STAT	REF.DES.	QTY	COMP. PART NO.	DESCRIPTION		EFFECTIVE
ACT	R30026	-.--	4702-0221-003	RES, 5, 1/4W 220 OHM	*	00/00/00
ACT	R30027	-.--	4702-0153-003	RES, 5, 1/4W, 15K OHM		00/00/00
ACT	R30028	-.--	4702-0561-003	RES, 5, 1/4W, 560 OHM		00/00/00
ACT	R30029	-.--	4702-0221-003	RES, 5, 1/4W 220 OHM	*	00/00/00
ACT	R30030	-.--	4702-0471-003	RES, 5, 1/4W, 470 OHM		00/00/00
ACT	R30031	-.--	4752-0502-002	POT 5K OHM		00/00/00
ACT	R30032	-.--	4702-0822-003	RES, 5, 1/4W, 8.2K OHM		00/00/00
ACT	R30033	-.--	4702-0103-003	RES,5, 1/4W 10K OHM	*	00/00/00
ACT	R30034	-.--	4702-0102-003	RES, 5, 1/4W, 1.0K OHM		00/00/00
ACT	R30035	-.--	4702-0471-003	RES, 5, 1/4W, 470 OHM		00/00/00
ACT	R30036	-.--	4702-0331-003	RES, 5%, 1/4W 330 OHM	*	00/00/00
ACT	R30037	-.--	4702-0102-003	RES, 5, 1/4W, 1.0K OHM		00/00/00
ACT	R30038	-.--	4702-0152-003	RES, 5, 1/4W, 1.5K OHM		00/00/00
ACT	R30039	-.--	4702-0221-003	RES, 5, 1/4W 220 OHM	*	00/00/00
ACT	R30040	-.--	4702-0181-003	RES, 5, 1/4W, 180 OHM		00/00/00
ACT	R30041	-.--	4752-0202-002	POT, 2K OHM		00/00/00
ACT	R30042	-.--	4752-0202-002	POT, 2K OHM		00/00/00
ACT	R30043	-.--	4702-0103-003	RES,5, 1/4W 10K OHM	*	00/00/00
ACT	R30044	-.--	4702-0223-003	RES, 5%, 1/4W 22K OHM	*	00/00/00
ACT	R30045	-.--	4702-0102-003	RES, 5, 1/4W, 1.0K OHM		00/00/00
ACT	R30046	3.00	4702-0101-003	RES, 5, 1/4W, 100 OHM		00/00/00
ACT	R30047	1.00	4702-0680-003	RES, 5%, 1/4W, 68 OHM	*	00/00/00
ACT	R30048	-.--	4702-0331-003	RES, 5%, 1/4W 330 OHM	*	00/00/00
ACT	R30049	-.--	4702-0331-003	RES, 5%, 1/4W 330 OHM	*	00/00/00
ACT	R30050	-.--	4702-0331-003	RES, 5%, 1/4W 330 OHM	*	00/00/00
ACT	R30051	-.--	4702-0331-003	RES, 5%, 1/4W 330 OHM	*	00/00/00

ASSY NO.	REVISION	DESCRIPTION	LAST ECN	DATE INC
7010-4933-100	A	PCB ASSY,RANGE BOARD #2	13840	11/13/90

STAT	REF.DES.	QTY	COMP. PART NO.	DESCRIPTION			EFFECTIVE
ACT	R30052	-.--	4702-0561-003	RES, 5, 1/4W,	560	OHM	00/00/00
ACT	R30053	-.--	4702-0102-003	RES, 5, 1/4W,	1.0K	OHM	00/00/00
ACT	R30054	-.--	4702-0102-003	RES, 5, 1/4W,	1.0K	OHM	00/00/00
ACT	R30055	2.00	4702-0332-003	RES, 5, 1/4W,	3.3K	OHM	00/00/00
ACT	R30056	2.00	4702-0472-003	RES, 5, 1/4W,	4.7K	OHM	00/00/00
ACT	R30057	2.00	4702-0473-003	RES, 5%, 1/4W	47K OHM	*	00/00/00
ACT	R30058	-.--	4702-0473-003	RES, 5%, 1/4W	47K OHM	*	00/00/00
ACT	R30059	1.00	4702-0222-003	RES, 5%, 1/4W	2.2K OHM	*	00/00/00
ACT	R30060	-.--	4702-0102-003	RES, 5, 1/4W,	1.0K	OHM	00/00/00
ACT	R30061	-.--	4702-0102-003	RES, 5, 1/4W,	1.0K	OHM	00/00/00
ACT	R30062	1.00	4752-0104-002	POT 100K OHM			00/00/00
ACT	R30063	1.00	4706-2152-001	RES, 1, 1/4W,	21.5K	OHM	00/00/00
ACT	R30064	-.--	4702-0472-003	RES, 5, 1/4W,	4.7K	OHM	00/00/00
ACT	R30065	1.00	4702-0182-003	RES, 5, 1/4W,	1.8K	OHM	00/00/00
ACT	R30066	1.00	4752-0102-002	POT 1K OHM			00/00/00
ACT	R30067	4.00	4702-0560-003	RES, 5, 1/4W,	56	OHM	00/00/00
ACT	R30068	2.00	4702-0122-003	RES, 5, 1/4W,	1.2K	OHM	00/00/00
ACT	R30069	-.--	4702-0122-003	RES, 5, 1/4W,	1.2K	OHM	00/00/00
ACT	R30070	-.--	4702-0221-003	RES, 5, 1/4W 220	OHM	*	00/00/00
ACT	R30071	-.--	4702-0471-003	RES, 5, 1/4W,	470	OHM	00/00/00
ACT	R30072	-.--	4702-0221-003	RES, 5, 1/4W 220	OHM	*	00/00/00
ACT	R30073	-.--	4702-0471-003	RES, 5, 1/4W,	470	OHM	00/00/00
ACT	R30074	-.--	4702-0331-003	RES, 5%, 1/4W	330 OHM	*	00/00/00
ACT	R30075	-.--	4702-0152-003	RES, 5, 1/4W,	1.5K	OHM	00/00/00
ACT	R30076	-.--	4702-0102-003	RES, 5, 1/4W,	1.0K	OHM	00/00/00
ACT	R30077	-.--	4702-0560-003	RES, 5, 1/4W,	56	OHM	00/00/00

ASSY NO.	REVISION	DESCRIPTION	LAST ECN	DATE INC
701(-4933-100	A	PCB ASSY,RANGE BOARD #2	13840	11/13/90

STAT	REF.DES.	QTY	COMP. PART NO.	DESCRIPTION	EFFECTIVE
ACT	R30078	-.--	4702-0101-003	RES, 5, 1/4W, 100 OHM	00/00/00
ACT	R30079	-.--	4702-0560-003	RES, 5, 1/4W, 56 OHM	00/00/00
ACT	R30080	-.--	4702-0101-003	RES, 5, 1/4W, 100 OHM	00/00/00
ACT	R30081	-.--	4702-0331-003	RES, 5%, 1/4W 330 OHM *	00/00/00
ACT	R30082	-.--	4702-0332-003	RES, 5, 1/4W, 3.3K OHM	00/00/00
ACT	R30083	-.--	4702-0221-003	RES, 5, 1/4W 220 OHM *	00/00/00
ACT	R30084	1.00	4702-0391-003	RES,5, 1/4W 390 OHM *	00/00/00
ACT	R30085	1.00	4702-0479-003	RES, 5, 1/4W, 4.7 OHM	00/00/00
ACT	R30086	-.--	4702-0560-003	RES, 5, 1/4W, 56 OHM	00/00/00
ACT	R30087	-.--	4702-0102-003	RES, 5, 1/4W, 1.0K OHM	00/00/00
ACT	U30001	2.00	3133-0000-007	IC,4066B,QUAD BILATERAL SWITCH	00/00/00
ACT	U30002	2.00	3221-0001-000	IC,353,DUAL JFET OP AMP	00/00/00
ACT	U30003	-.--	3133-0000-007	IC,4066B,QUAD BILATERAL SWITCH	00/00/00
ACT	U30004	-.--	3221-0001-000	IC,353,DUAL JFET OP AMP	00/00/00
ACT	U30005	2.00	3131-0000-044	IC,74LS00,QUAD 2-INPUT NAND	00/00/00
ACT	U30006	-.--	3131-0000-044	IC,74LS00,QUAD 2-INPUT NAND	00/00/00
ACT	U30007	1.00	3131-0000-037	IC,74LS20,DUAL 4-INPUT NAND	00/00/00
ACT	U30008	1.00	3133-0000-024	IC,3130,BIMOS OP AMP,PLAST DIP	00/00/00
ACT	U30009	1.00	3133-0000-006	IC,4049UB,HEX BUFFER/CONVERTER	00/00/00

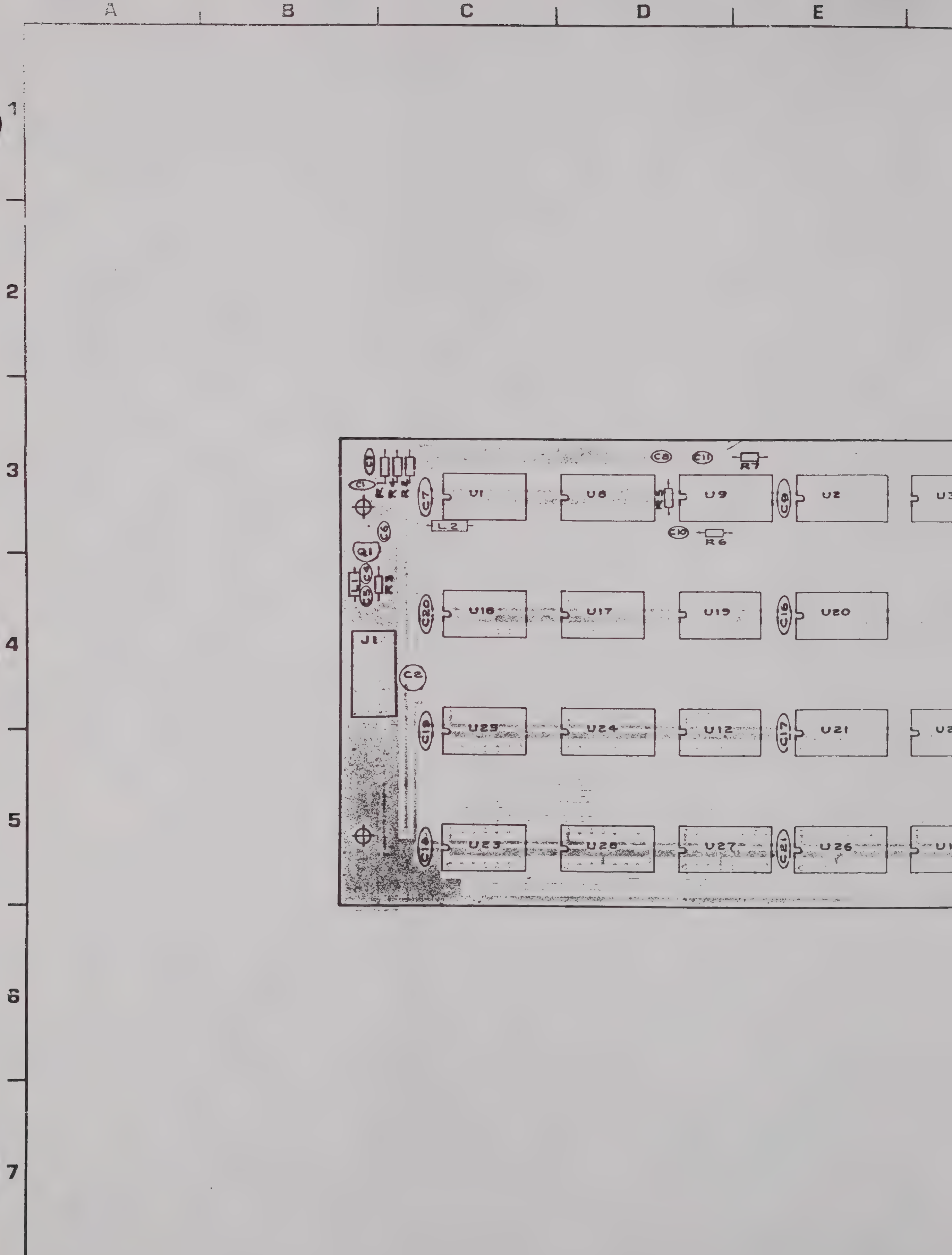
A
B
C
D
E
1
2
3
4
5
6
7
C8
C11
R7
U1
U8
U9
U2
C7
C9
L2
C10
R6
Q1
U18
U17
U19
U20
C20
C16
J1
C2
U25
U24
U12
U21
C17
U23
U28
U27
U26
C21

F G H J K L

	B	Revised per markup
7-5-90	B-3 INC ECN 11655	AO
9-25-90	B-4 INC RC 13	

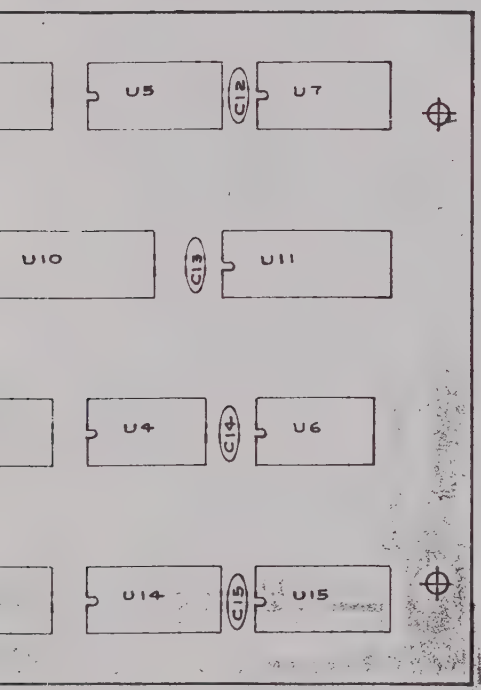

DASH NO	REF DES SERIES	NEXT ASSY	MODEL
-300	35000	7005-4940-600	RD-301

APPLICATION

UNLESS OTHERWISE SPECIFIED ALL DIMENSIONS APPLY AFTER FINISH

TOLERANCES
DECIMALS ±.XX ±.XXX
FRACTIONS ±
ANGLES ±
SURFACE FINISH √
DO NOT SCALE THIS DRAWING

MATERIAL

FINISH

-IFR INC-
10200 West York Street
Wichita, Kansas 67215

DRAWN A. OSBURN	DATE 7-19-84	TITLE PC BOARD ASSY DISCRIMINATOR BOARD NO. 2 (49-313)
CHECKED W.	DATE	
APPROVED Bill Young	DATE 12-8-84	SIZE D · DWG NO 7010-4931-300 · REV B4
		SCALE 2:1 · CODE IDENT 51190 · WEIGHT · SHEET 1 OF 1

(17)

ASSY NO.	REVISION	DESCRIPTION	LAST ECN	DATE INC
7010-4931-300	B4	PCB ASSY,DISCRIMINATOR #2	13725	09/27/90

STAT	REF.DES.	QTY	COMP. PART NO.	DESCRIPTION	EFFECTIVE
ACT		1.00	1700-4921-300	PC BOARD,DISCRIMINATOR #2	00/00/00
ACT		.00	DWG-0000-4911-300	DWG SCHEM,DISCRIMINATOR BD #2	00/00/00
ACT	C35001	1.00	1506-0102-017	CAP, pF 1000, 100V, NPO 5 *	00/00/00
ACT	C35002	1.00	1580-4702-105	CAP, UF 47, 10V, ELE RDL *	00/00/00
ACT	C35003	1.00	1506-0103-017	CAP, uF .010, 100V, NPO *	00/00/00
ACT	C35004	2.00	1506-0470-017	CAP, 47pF 100V NPO *	00/00/00
ACT	C35005	1.00	1506-0121-017	CAP, pF 120, 100V, NPO 5 *	00/00/00
ACT	C35006	-.--	1506-0470-017	CAP, 47pF 100V NPO *	00/00/00
ACT	C35007	12.00	1521-0000-008	CAP,UF .10 50V,DIP Z5U *	00/00/00
ACT	C35008	3.00	1506-0332-017	CAP,PF 3300, 100V,NPO, 5	00/00/00
ACT	C35009	-.--	1521-0000-008	CAP,UF .10 50V,DIP Z5U *	00/00/00
ACT	C35010	-.--	1506-0332-017	CAP,PF 3300, 100V,NPO, 5	00/00/00
ACT	C35011	-.--	1506-0332-017	CAP,PF 3300, 100V,NPO, 5	00/00/00
ACT	C35012	-.--	1521-0000-008	CAP,UF .10 50V,DIP Z5U *	00/00/00
ACT	C35013	-.--	1521-0000-008	CAP,UF .10 50V,DIP Z5U *	00/00/00
ACT	C35014	-.--	1521-0000-008	CAP,UF .10 50V,DIP Z5U *	00/00/00
ACT	C35015	-.--	1521-0000-008	CAP,UF .10 50V,DIP Z5U *	00/00/00
ACT	C35016	-.--	1521-0000-008	CAP,UF .10 50V,DIP Z5U *	00/00/00
ACT	C35017	-.--	1521-0000-008	CAP,UF .10 50V,DIP Z5U *	00/00/00
ACT	C35018	-.--	1521-0000-008	CAP,UF .10 50V,DIP Z5U *	00/00/00
ACT	C35019	-.--	1521-0000-008	CAP,UF .10 50V,DIP Z5U *	00/00/00
ACT	C35020	-.--	1521-0000-008	CAP,UF .10 50V,DIP Z5U *	00/00/00
ACT	C35021	-.--	1521-0000-008	CAP,UF .10 50V,DIP Z5U *	00/00/00
ACT	J35001	1.00	2129-1001-010	CONN,HEADER,10-P STR 609-1027*	00/00/00
ACT	L35001	1.00	1801-0128-003	IND, .12UH,.090HM,1025-96	00/00/00
ACT	L35002	1.00	1801-0109-001	IND, 1.0 UH, 1 OHM,1025-20	00/00/00

ASSY NO.	REVISION	DESCRIPTION	LAST ECN	DATE INC
7010-4931-300	B4	PCB ASSY,DISCRIMINATOR #2	13725	09/27/90

STAT	REF.DES.	QTY	COMP. PART NO.	DESCRIPTION	EFFECTIVE
ACT	Q35001	1.00	4807-0000-002	TRANS, 2N3905 ,PNP HS SW	00/00/00
ACT	R35001	1.00	4701-0102-003	RES, S, 1/8W, 1.0K OHM	00/00/00
ACT	R35002	1.00	4701-0680-003	RES, S, 1/8W, 68 OHM	00/00/00
ACT	R35003	1.00	4701-0332-003	RES, S, 1/8W, 3.3K OHM *	00/00/00
ACT	R35004	1.00	4701-0221-003	RES, S, 1/8W, 220 OHM	00/00/00
ACT	R35005	3.00	4701-0331-003	RES, S, 1/8W, 330 OHM	00/00/00
ACT	R35006	-.--	4701-0331-003	RES, S, 1/8W, 330 OHM	00/00/00
ACT	R35007	-.--	4701-0331-003	RES, S, 1/8W, 330 OHM	00/00/00
ACT	U35001	3.00	3132-0000-001	IC,74S00,QUAD 2-INPUT NAND	00/00/00
ACT	U35002	4.00	3132-0000-002	IC,74S112,DUAL JK FLIP-FLOP	00/00/00
ACT	U35003	8.00	3131-0000-030	IC,74LS191,BIN SYN U/D COUNTER	00/00/00
ACT	U35004	3.00	3131-0000-033	IC,74LS04,HEX INVERTER	00/00/00
ACT	U35005	-.--	3131-0000-030	IC,74LS191,BIN SYN U/D COUNTER	00/00/00
ACT	U35006	-.--	3131-0000-033	IC,74LS04,HEX INVERTER	00/00/00
ACT	U35007	-.--	3131-0000-030	IC,74LS191,BIN SYN U/D COUNTER	00/00/00
ACT	U35008	-.--	3132-0000-002	IC,74S112,DUAL JK FLIP-FLOP	00/00/00
ACT	U35009	1.00	3132-0100-005	IC 74LS74N 7550 8000 ONLY	00/00/00
ACT	U35010	2.00	3211-3374-000	IC,74LS374,OCTAL D FLIP-FLOP	00/00/00
ACT	U35011	-.--	3211-3374-000	IC,74LS374,OCTAL D FLIP-FLOP	00/00/00
ACT	U35012	2.00	3131-0000-044	IC,74LS00,QUAD 2-INPUT NAND	00/00/00
ACT	U35013	3.00	3131-0000-042	IC,74LS283,4-BIT BINARY ADDER	00/00/00
ACT	U35014	-.--	3131-0000-042	IC,74LS283,4-BIT BINARY ADDER	00/00/00
ACT	U35015	-.--	3131-0000-042	IC,74LS283,4-BIT BINARY ADDER	00/00/00
ACT	U35016	1.00	0002-0000-000	*** REF DESIG NOT USED ***	00/00/00
ACT	U35017	-.--	3132-0000-001	IC,74S00,QUAD 2-INPUT NAND	00/00/00
ACT	U35018	-.--	3131-0000-033	IC,74LS04,HEX INVERTER	00/00/00

ASSY NO.	REVISION	DESCRIPTION	LAST ECN	DATE INC
7010-4931-300	B4	PCB ASSY,DISCRIMINATOR #2	13725	09/27/90

STAT	REF.DES.	QTY	COMP. PART NO.	DESCRIPTION	EFFECTIVE
ACT	U35019	-.--	3131-0000-044	IC,74LS00,QUAD 2-INPUT NAND	00/00/00
ACT	U35020	-.--	3132-0000-002	IC,74S112,DUAL JK FLIP-FLOP	00/00/00
ACT	U35021	-.--	3131-0000-030	IC,74LS191,BIN SYN U/D COUNTER	00/00/00
ACT	U35022	-.--	3131-0000-030	IC,74LS191,BIN SYN U/D COUNTER	00/00/00
ACT	U35023	1.00	3131-0000-037	IC,74LS20,DUAL 4-INPUT NAND	00/00/00
ACT	U35024	-.--	3132-0000-002	IC,74S112,DUAL JK FLIP-FLOP	00/00/00
ACT	U35025	-.--	3132-0000-001	IC,74S00,QUAD 2-INPUT NAND	00/00/00
ACT	U35026	-.--	3131-0000-030	IC,74LS191,BIN SYN U/D COUNTER	00/00/00
ACT	U35027	-.--	3131-0000-030	IC,74LS191,BIN SYN U/D COUNTER	00/00/00
ACT	U35028	-.--	3131-0000-030	IC,74LS191,BIN SYN U/D COUNTER	00/00/00

LI,283,2.MDATAB01 IFR SYSTEMS, INC.
MON, JAN 4, 1993, 12:46 PM

REQUEST

BILL OF MATERIAL LISTED BY REFERENCE DESIGNATOR
AS OF ALL DATES

ASSEMBLY PART NO.: 7010-4932-800
DESCRIPTION: PC BD ASSY-DISCR BD NO.1
ITEM MASTER REV: G ECO NO: 14073
REV OF THIS BOM: DATE OF LAST ECO: 03/05/92

STATUS	REFERENCE DESIGNATOR	QUANTITY PER ASSY	PART NUMBER	DESCRIPTION	EFFEC
ACTIVE	*01	1.00	1700-4922-800	PC BD,DISCR BD NO.1	00/00
ACTIVE	*02	1.00	1415-4952-600	ENCL,DISC,BOTTOM,8.15LG	00/00
ACTIVE	*03	1.00	1415-4952-700	ENCL,DISC TOP,8.05 LG	00/00
ACTIVE	*04	.00	1050-0000-075	WIRE,BUS,TINNED COPPER,26GA	00/00
ACTIVE	*07	13.00	2803-1000-003	SCREW,4-40 X 1 PFHM	00/00
ACTIVE	*10	2.00	2750-0150-500	CORE,BEAD,STACKPOLE 57-0180	00/00
ACTIVE	*11	4.00	2803-0250-006	SCREW,4-40 X 1/4 PPHM	00/00
ACTIVE	*12	.70	6000-6990-340	WIRE,MAG,BIFILAR,RED/GRN,34GA	00/00
ACTIVE	*13	.10	6011-0018-001	TUBING,TF,26 AWG,NATURAL,TW	00/00
ACTIVE	*14	1.60	6000-6050-260	WIRE,MAG,SINGLE BELDSOL,26 GA	00/00
ACTIVE	*15	.20	6011-0022-001	TUBING,TF,24 AWG,NATURAL,TW	00/00
ACTIVE	*16	.00	1050-0000-074	WIRE,BUS,TINNED COPPER,24GA	00/00
ACTIVE	*L50007	.00	1050-0000-071	WIRE,BUS,TINNED COPPER,18GA	00/00
ACTIVE	*L50060	-.--	6000-6050-260	WIRE,MAG,SINGLE BELDSOL,26 GA	00/00
ACTIVE	*L50062	-.--	6000-6050-260	WIRE,MAG,SINGLE BELDSOL,26 GA	00/00
ACTIVE	*TB50001	1.00	2155-1010-020	TERM STRIP,.100C,STR,20-P	00/00
ACTIVE	*TB50002	-.--	2155-1010-020	TERM STRIP,.100C,STR,20-P	00/00
ACTIVE	*TB50003	-.--	2155-1010-020	TERM STRIP,.100C,STR,20-P	00/00
ACTIVE	C50001	3.00	1517-3295-303	CAP,VAR,6 - 20 PF	00/00
ACTIVE	C50002SAT	9.00	1506-0270-017	CAP,PF 27, 100V,NPO, 5	00/00
ACTIVE	C50003	13.00	0003-0000-000	***** FOR REFERENCE ONLY *****	00/00
ACTIVE	C50004	-.--	1517-3295-303	CAP,VAR,6 - 20 PF	00/00

LI,283,2.MDATAB01 IFR SYSTEMS, INC.
MON, JAN 4, 1993, 12:46 PM

BILL OF MATERIAL LISTED BY REFERENCE DESIGNATOR
AS OF ALL DATES

ASSEMBLY PART NO.: 7010-4932-800
DESCRIPTION: PC BD ASSY-DISCR BD NO.1
ITEM MASTER REV: G ECO NO: 14073
REV OF THIS BOM: DATE OF LAST ECO: 03/05/92

STATUS	REFERENCE DESIGNATOR	QUANTITY PER ASSY	PART NUMBER	DESCRIPTION	EFFEC
ACTIVE	C50005	2.00	1506-0182-017	CAP,PF 1800, 100V,NPO, 5	00/00
ACTIVE	C50006	-.--	1517-3295-303	CAP,VAR,6 - 20 PF	00/00
ACTIVE	C50007	-.--	0003-0000-000	***** FOR REFERENCE ONLY *****	00/00
ACTIVE	C50008	5.00	1506-0680-017	CAP,PF 68, 100V,NPO, 5	00/00
ACTIVE	C50009	9.00	1507-0685-018	CAP,UF 6.8, 35V,TANT, 20	00/0(
ACTIVE	C50010	4.00	1506-0103-016	CAP,UF, .010 50V,NPO 5% *	00/00
ACTIVE	C50011	16.00	1521-0000-008	CAP,UF .10 50V,DIP Z5U *	00/0(
ACTIVE	C50012	3.00	1506-0471-017	CAP,pF 470, 100V,NPO 5 *	00/00
ACTIVE	C50013	-.--	1521-0000-008	CAP,UF .10 50V,DIP Z5U *	00/0(
ACTIVE	C50014	2.00	1506-0681-017	CAP,pF, 680, 100V,NPO, 5 *	00/0(
ACTIVE	C50015	-.--	1506-0182-017	CAP,PF 1800, 100V,NPO, 5	00/00
ACTIVE	C50016	-.--	1506-0680-017	CAP,PF 68, 100V,NPO, 5	00/0(
ACTIVE	C50017	-.--	1507-0685-018	CAP,UF 6.8, 35V,TANT, 20	00/0(
ACTIVE	C50018	-.--	1521-0000-008	CAP,UF .10 50V,DIP Z5U *	00/0(
ACTIVE	C50019	-.--	1506-0471-017	CAP,pF 470, 100V,NPO 5 *	00/0(
ACTIVE	C50020	1.00	1507-0566-024	CAP,UF 56, 6V,TANT, 20	00/0(
ACTIVE	C50021	-.--	1521-0000-008	CAP,UF .10 50V,DIP Z5U *	00/0(
ACTIVE	C50022	-.--	1521-0000-008	CAP,UF .10 50V,DIP Z5U *	00/0(
ACTIVE	C50023	5.00	1506-0103-017	CAP, uF .010, 100V, NPO *	00/0(
ACTIVE	C50024	2.00	1506-0220-017	CAP,PF 22, 100V,NPO, 5	00/0(
ACTIVE	C50025	1.00	1502-0104-002	CAP,UF, .10, 50V,PCARB, 2 *	00/0(
ACTIVE	C50026	-.--	1506-0680-017	CAP,PF 68, 100V,NPO, 5	00/0(

BILL OF MATERIAL LISTED BY REFERENCE DESIGNATOR
AS OF ALL DATES

ASSEMBLY PART NO.: 7010-4932-800
DESCRIPTION: PC BD ASSY-DISCR BD NO.1
ITEM MASTER REV: G ECO NO: 14073
REV OF THIS BOM: DATE OF LAST ECO: 03/05/92

STATUS	REFERENCE DESIGNATOR	QUANTITY PER ASSY	PART NUMBER	DESCRIPTION	EFFEC
ACTIVE	C50027	-.--	1506-0471-017	CAP,pF 470, 100V,NPO 5 *	00/00
ACTIVE	C50028	-.--	1521-0000-008	CAP,UF .10 50V,DIP Z5U *	00/00
ACTIVE	C50029	-.--	1507-0685-018	CAP,UF 6.8, 35V,TANT, 20	00/00
ACTIVE	C50030	3.00	1502-0105-007	CAP,UF 1.0, 50V,MPC, 5	00/00
ACTIVE	C50031	-.--	1502-0105-007	CAP,UF 1.0, 50V,MPC, 5	00/00
ACTIVE	C50032	-.--	1502-0105-007	CAP,UF 1.0, 50V,MPC, 5	00/00
ACTIVE	C50033	-.--	1506-0680-017	CAP,PF 68, 100V,NPO, 5	00/00
ACTIVE	C50034	-.--	1506-0103-016	CAP,UF, .010 50V,NPO 5% *	00/00
ACTIVE	C50035	-.--	1521-0000-008	CAP,UF .10 50V,DIP Z5U *	00/00
ACTIVE	C50036	-.--	1506-0680-017	CAP,PF 68, 100V,NPO, 5	00/00
ACTIVE	C50037	12.00	1506-0102-017	CAP, pF 1000, 100V, NPO 5 *	00/00
ACTIVE	C50038	1.00	1507-0476-018	CAP,UF 47, 35V,TANT, 20	00/00
ACTIVE	C50039	-.--	1506-0681-017	CAP,pF, 680, 100V,NPO, 5 *	00/00
ACTIVE	C50040	-.--	1521-0000-008	CAP,UF .10 50V,DIP Z5U *	00/00
ACTIVE	C50041	-.--	1506-0103-016	CAP,UF, .010 50V,NPO 5% *	00/00
ACTIVE	C50042	1.00	1507-0105-018	CAP,uF 1.0, 35V,TANT, 20 *	00/00
ACTIVE	C50043	-.--	1521-0000-008	CAP,UF .10 50V,DIP Z5U *	00/00
ACTIVE	C50044	2.00	1508-0157-020	CAP, UF 150, 15V, TANT RDL *	00/00
ACTIVE	C50045	-.--	1508-0157-020	CAP, UF 150, 15V, TANT RDL *	00/00
ACTIVE	C50046	1.00	1580-4702-105	CAP, UF 47, 10V, ELE RDL *	00/00
ACTIVE	C50047	4.00	1523-0000-002	CAP,PF 1800, 50V,CHIP,X7R	00/00
ACTIVE	C50048	5.00	1506-0020-017	CAP,PF 2.2,100V,NPO,25	00/00

LI,283,2.MDATAB01 IFR SYSTEMS, INC.
MON, JAN 4, 1993, 12:46 PM

BILL OF MATERIAL LISTED BY REFERENCE DESIGNATOR
AS OF ALL DATES

ASSEMBLY PART NO.: 7010-4932-800
DESCRIPTION: PC BD ASSY-DISCR BD NO.1
ITEM MASTER REV: G ECO NO: 14073
REV OF THIS BOM: DATE OF LAST ECO: 03/05/92

STATUS	REFERENCE DESIGNATOR	QUANTITY PER ASSY	PART NUMBER	DESCRIPTION		EFFEC
ACTIVE	C50049	-.--	1506-0103-017	CAP, uF .010, 100V, NPO	*	00/00
ACTIVE	C50050	5.00	1506-0101-017	CAP,pF 100, 100V NPO 5	*	00/00
ACTIVE	C50051	4.00	1620-5090-511	CAP,PF 5.0 50V,CHIP		00/00
ACTIVE	C50052	-.--	1506-0020-017	CAP,PF 2.2,100V,NPO,25		00/00
ACTIVE	C50053	8.00	1506-0030-017	CAP,PF 3.3, 100V,MICA, 17		00/00
ACTIVE	C50054	2.00	1521-0000-004	CAP,VAR, 0.6- 4.5PF,500V,7273		00/00
ACTIVE	C50055	-.--	1506-0030-017	CAP,PF 3.3, 100V,MICA, 17		00/00
ACTIVE	C50056	14.00	1506-0050-017	CAP,pF 5.6 100V NPO 5	*	00/00
ACTIVE	C50057	-.--	1506-0050-017	CAP,pF 5.6 100V NPO 5	*	00/00
ACTIVE	C50058	-.--	1506-0050-017	CAP,pF 5.6 100V NPO 5	*	00/00
ACTIVE	C50059	2.00	1620-2210-600	CAP, PF 220, 100V, CHIP NPO	*	00/00
ACTIVE	C50060	-.--	1506-0030-017	CAP,PF 3.3, 100V,MICA, 17		00/00
ACTIVE	C50061	-.--	1506-0020-017	CAP,PF 2.2,100V,NPO,25		00/00
ACTIVE	C50062	-.--	1506-0030-017	CAP,PF 3.3, 100V,MICA, 17		00/00
ACTIVE	C50063	-.--	1506-0030-017	CAP,PF 3.3, 100V,MICA, 17		00/00
ACTIVE	C50064	-.--	1506-0101-017	CAP,pF 100, 100V NPO 5	*	00/00
ACTIVE	C50065	-.--	1506-0270-017	CAP,PF 27, 100V,NPO, 5		00/00
ACTIVE	C50066	-.--	1506-0050-017	CAP,pF 5.6 100V NPO 5	*	00/00
ACTIVE	C50067	-.--	1506-0270-017	CAP,PF 27, 100V,NPO, 5		00/00
ACTIVE	C50068	-.--	1506-0270-017	CAP,PF 27, 100V,NPO, 5		00/00
ACTIVE	C50069	-.--	1506-0102-017	CAP, pF 1000, 100V, NPO 5	*	00/00
ACTIVE	C50070	-.--	1506-0101-017	CAP,pF 100, 100V NPO 5	*	00/00

LI,283,2.MDATAB01 IFR SYSTEMS, INC.
MON, JAN 4, 1993, 12:46 PM

BILL OF MATERIAL LISTED BY REFERENCE DESIGNATOR
AS OF ALL DATES

ASSEMBLY PART NO.: 7010-4932-800
DESCRIPTION: PC BD ASSY-DISCR BD NO.1
ITEM MASTER REV: G ECO NO: 14073
REV OF THIS BOM: DATE OF LAST ECO: 03/05/92

STATUS	REFERENCE DESIGNATOR	QUANTITY PER ASSY	PART NUMBER	DESCRIPTION	EFFEC
ACTIVE	C50071	-.--	1523-0000-002	CAP,PF 1800, 50V,CHIP,X7R	00/0(
ACTIVE	C50072	-.--	1506-0101-017	CAP,pF 100, 100V NPO 5 *	00/0(
ACTIVE	C50073	43.00	0002-0000-000	*** REF DESIG NOT USED ***	00/0(
ACTIVE	C50074	-.--	1506-0103-017	CAP, uF .010, 100V, NPO *	00/0(
ACTIVE	C50075	-.--	1506-0270-017	CAP,PF 27, 100V,NPO, 5	00/0(
ACTIVE	C50076	-.--	1506-0103-016	CAP,UF, .010 50V,NPO 5% *	00/0(
ACTIVE	C50077	-.--	1506-0030-017	CAP,PF 3.3, 100V,MICA, 17	00/0(
ACTIVE	C50078	3.00	1620-2200-500	CAP, PF 22, 100V, CHIP NPO *	00/0(
ACTIVE	C50079	-.--	0002-0000-000	*** REF DESIG NOT USED ***	00/0(
ACTIVE	C50080	3.00	1506-0100-017	CAP,PF 10, 100V,NPO, 5	00/0(
ACTIVE	C50081	-.--	0002-0000-000	*** REF DESIG NOT USED ***	00/0(
ACTIVE	C50082	-.--	1506-0270-017	CAP,PF 27, 100V,NPO, 5	00/0(
ACTIVE	C50083	-.--	1506-0270-017	CAP,PF 27, 100V,NPO, 5	00/0(
ACTIVE	C50084	-.--	1506-0270-017	CAP,PF 27, 100V,NPO, 5	00/0(
ACTIVE	C50085	-.--	0002-0000-000	*** REF DESIG NOT USED ***	00/0(
ACTIVE	C50086	-.--	1506-0270-017	CAP,PF 27, 100V,NPO, 5	00/0(
ACTIVE	C50087	-.--	1523-0000-002	CAP,PF 1800, 50V,CHIP,X7R	00/0(
ACTIVE	C50089	-.--	1620-2200-500	CAP, PF 22, 100V, CHIP NPO *	00/0(
ACTIVE	C50090	-.--	1506-0220-017	CAP,PF 22, 100V,NPO, 5	00/0(
ACTIVE	C50091	-.--	0002-0000-000	*** REF DESIG NOT USED ***	00/0(
ACTIVE	C50092	-.--	1521-0000-008	CAP,UF .10 50V,DIP Z5U *	00/0(
ACTIVE	C50093	-.--	1521-0000-008	CAP,UF .10 50V,DIP Z5U *	00/0(

LI,283,2.MDATAB01 IFR SYSTEMS, INC.
MON, JAN 4, 1993, 12:46 PM

BILL OF MATERIAL LISTED BY REFERENCE DESIGNATOR
AS OF ALL DATES

ASSEMBLY PART NO.: 7010-4932-800
DESCRIPTION: PC BD ASSY-DISCR BD NO.1
ITEM MASTER REV: G ECO NO: 14073
REV OF THIS BOM: DATE OF LAST ECO: 03/05/92

STATUS	REFERENCE DESIGNATOR	QUANTITY PER ASSY	PART NUMBER	DESCRIPTION	EFFEC
ACTIVE	C50094	-.--	0002-0000-000	*** REF DESIG NOT USED ***	00/0(
ACTIVE	C50095	-.--	1506-0100-017	CAP,PF 10, 100V,NPO, 5	00/0(
ACTIVE	C50096	-.--	1506-0102-017	CAP, pF 1000, 100V, NPO 5 *	00/0(
ACTIVE	C50097	-.--	1506-0102-017	CAP, pF 1000, 100V, NPO 5 *	00/0(
ACTIVE	C50098	-.--	1507-0685-018	CAP,UF 6.8, 35V,TANT, 20	00/0(
ACTIVE	C50099	-.--	1507-0685-018	CAP,UF 6.8, 35V,TANT, 20	00/0(
ACTIVE	C50100	-.--	1506-0103-017	CAP, uF .010, 100V, NPO *	00/0(
ACTIVE	C50101	-.--	0002-0000-000	*** REF DESIG NOT USED ***	00/0(
ACTIVE	C50102	-.--	1506-0050-017	CAP,pF 5.6 100V NPO 5 *	00/0(
ACTIVE	C50103	-.--	1506-0102-017	CAP, pF 1000, 100V, NPO 5 *	00/0(
ACTIVE	C50104	-.--	1506-0050-017	CAP,pF 5.6 100V NPO 5 *	00/0(
ACTIVE	C50105	-.--	1506-0102-017	CAP, pF 1000, 100V, NPO 5 *	00/0(
ACTIVE	C50106	-.--	1506-0050-017	CAP,pF 5.6 100V NPO 5 *	00/0(
ACTIVE	C50107	-.--	1506-0050-017	CAP,pF 5.6 100V NPO 5 *	00/0(
ACTIVE	C50108	-.--	1506-0050-017	CAP,pF 5.6 100V NPO 5 *	00/0(
ACTIVE	C50109	-.--	1523-0000-002	CAP,PF 1800, 50V,CHIP,X7R	00/0(
ACTIVE	C50110	3.00	1506-0150-017	CAP,PF 15, 100V,NPO 5 *	00/0(
ACTIVE	C50111	-.--	1620-5090-511	CAP,PF 5.0 50V,CHIP	00/0(
ACTIVE	C50112	-.--	1506-0150-017	CAP,PF 15, 100V,NPO 5 *	00/0(
ACTIVE	C50113	-.--	1506-0102-017	CAP, pF 1000, 100V, NPO 5 *	00/0(
ACTIVE	C50114	-.--	1506-0150-017	CAP,PF 15, 100V,NPO 5 *	00/0(
ACTIVE	C50115	-.--	1506-0102-017	CAP, pF 1000, 100V, NPO 5 *	00/0(

LI,283,2.MDATAB01 IFR SYSTEMS, INC.
MON, JAN 4, 1993, 12:46 PM

BILL OF MATERIAL LISTED BY REFERENCE DESIGNATOR
AS OF ALL DATES

ASSEMBLY PART NO.: 7010-4932-800
DESCRIPTION: PC BD ASSY-DISCR BD NO.1
ITEM MASTER REV: G ECO NO: 14073
REV OF THIS BOM: DATE OF LAST ECO: 03/05/92

STATUS	REFERENCE DESIGNATOR	QUANTITY PER ASSY	PART NUMBER	DESCRIPTION	EFFEC
ACTIVE	C50116	-.--	1506-0050-017	CAP,pF 5.6 100V NPO 5 *	00/00
ACTIVE	C50117	-.--	1620-5090-511	CAP,PF 5.0 50V,CHIP	00/00
ACTIVE	C50118	-.--	0002-0000-000	*** REF DESIG NOT USED ***	00/00
ACTIVE	C50119	-.--	1506-0102-017	CAP, pF 1000, 100V, NPO 5 *	00/00
ACTIVE	C50120	-.--	1506-0050-017	CAP,pF 5.6 100V NPO 5 *	00/00
ACTIVE	C50121	-.--	0002-0000-000	*** REF DESIG NOT USED ***	00/00
ACTIVE	C50122	-.--	1507-0685-018	CAP,UF 6.8, 35V,TANT, 20	00/00
ACTIVE	C50123	-.--	1506-0030-017	CAP,PF 3.3, 100V,MICA, 17	00/00
ACTIVE	C50124	-.--	0002-0000-000	*** REF DESIG NOT USED ***	00/0(
ACTIVE	C50125	-.--	0002-0000-000	*** REF DESIG NOT USED ***	00/0(
ACTIVE	C50126	-.--	1507-0685-018	CAP,UF 6.8, 35V,TANT, 20	00/00
ACTIVE	C50127	-.--	1506-0050-017	CAP,pF 5.6 100V NPO 5 *	00/00
ACTIVE	C50128	-.--	1507-0685-018	CAP,UF 6.8, 35V,TANT, 20	00/00
ACTIVE	C50129	2.00	1550-0300-500	CAP,VAR, 2.0- 8PF,350V,VPCM	00/00
ACTIVE	C50130	-.--	1506-0102-017	CAP, pF 1000, 100V, NPO 5 *	00/00
ACTIVE	C50131	-.--	1506-0050-017	CAP,pF 5.6 100V NPO 5 *	00/00
ACTIVE	C50132	-.--	1521-0000-004	CAP,VAR, 0.6- 4.5PF,500V,7273	00/00
ACTIVE	C50133	-.--	0002-0000-000	*** REF DESIG NOT USED ***	00/00
ACTIVE	C50134	-.--	1550-0300-500	CAP,VAR, 2.0- 8PF,350V,VPCM	00/00
ACTIVE	C50135	-.--	1506-0100-017	CAP,PF 10, 100V,NPO, 5	00/00
ACTIVE	C50136	-.--	0002-0000-000	*** REF DESIG NOT USED ***	00/00
ACTIVE	C50136	-.--	1506-0050-017	CAP,pF 5.6 100V NPO 5 *	00/00

BILL OF MATERIAL LISTED BY REFERENCE DESIGNATOR
AS OF ALL DATES

ASSEMBLY PART NO.: 7010-4932-800
DESCRIPTION: PC BD ASSY-DISCR BD NO.1
ITEM MASTER REV: G ECO NO: 14073
REV OF THIS BOM: DATE OF LAST ECO: 03/05/92

STATUS	REFERENCE DESIGNATOR	QUANTITY PER ASSY	PART NUMBER	DESCRIPTION	EFFEC
ACTIVE	C50137	-.--	1506-0102-017	CAP, pF 1000, 100V, NPO 5 *	00/0(
ACTIVE	C50138	-.--	1506-0102-017	CAP, pF 1000, 100V, NPO 5 *	00/0(
ACTIVE	C50139	-.--	1506-0103-017	CAP, uF .010, 100V, NPO *	00/0(
ACTIVE	C50140	-.--	1521-0000-008	CAP,UF .10 50V,DIP Z5U *	00/0(
ACTIVE	C50141	-.--	0002-0000-000	*** REF DESIG NOT USED ***	00/0(
ACTIVE	C50142	-.--	1521-0000-008	CAP,UF .10 50V,DIP Z5U *	00/0(
ACTIVE	C50143	-.--	1521-0000-008	CAP,UF .10 50V,DIP Z5U *	00/0(
ACTIVE	C50144	-.--	0002-0000-000	*** REF DESIG NOT USED ***	00/0(
ACTIVE	C50145	-.--	1506-0101-017	CAP,pF 100, 100V NPO 5 *	00/0(
ACTIVE	C50146	-.--	1507-0685-018	CAP,UF 6.8, 35V,TANT, 20	00/0(
ACTIVE	C50147	-.--	1521-0000-008	CAP,UF .10 50V,DIP Z5U *	00/0(
ACTIVE	C50148	-.--	1521-0000-008	CAP,UF .10 50V,DIP Z5U *	00/0(
ACTIVE	C50149	-.--	1506-0030-017	CAP,PF 3.3, 100V,MICA, 17	00/0(
ACTIVE	C50150	1.00	1523-0000-017	CAP PF, 2.0 100V CHIP	00/0(
ACTIVE	C50151	1.00	1620-1090-511	CAP,PF 1.0, 50V,CHIP	00/0(
ACTIVE	C50152	-.--	1506-0020-017	CAP,PF 2.2,100V,NPO,25	00/0(
ACTIVE	C50153	-.--	1620-2200-500	CAP, PF 22, 100V, CHIP NPO *	00/0(
ACTIVE	C50154	-.--	1620-2210-600	CAP, PF 220, 100V, CHIP NPO *	00/0(
ACTIVE	C50155	-.--	1506-0020-017	CAP,PF 2.2,100V,NPO,25	00/0(
ACTIVE	C50156	-.--	1620-5090-511	CAP,PF 5.0 50V,CHIP	00/0(
ACTIVE	C50157	1.00	1523-0000-007	CAP, uF .1, 25V, CHIP Z5U *	00/0(
ACTIVE	CR50001	8.00	4815-0000-003	DIODE, 1N4148 ,SIGNAL, 75PRV	00/0(

LI,283,2.MDATAB01 IFR SYSTEMS, INC.
MON, JAN 4, 1993, 12:46 PM

BILL OF MATERIAL LISTED BY REFERENCE DESIGNATOR
AS OF ALL DATES

ASSEMBLY PART NO.: 7010-4932-800
DESCRIPTION: PC BD ASSY-DISCR BD NO.1
ITEM MASTER REV: G ECO NO: 14073
REV OF THIS BOM: DATE OF LAST ECO: 03/05/92

STATUS	REFERENCE DESIGNATOR	QUANTITY PER ASSY	PART NUMBER	DESCRIPTION	EFFEC
ACTIVE	CR50002	-.--	4815-0000-003	DIODE, 1N4148 ,SIGNAL, 75PRV	00/00
ACTIVE	CR50003	-.--	4815-0000-003	DIODE, 1N4148 ,SIGNAL, 75PRV	00/00
ACTIVE	CR50004	-.--	4815-0000-003	DIODE, 1N4148 ,SIGNAL, 75PRV	00/00
ACTIVE	CR50005	4.00	4816-0000-003	DIODE,5082-2835,S-BAR 8 VBR	04/08
ACTIVE	CR50006	-.--	4816-0000-003	DIODE,5082-2835,S-BAR 8 VBR	04/08
ACTIVE	CR50007	-.--	4816-0000-003	DIODE,5082-2835,S-BAR 8 VBR	04/08
ACTIVE	CR50008	-.--	4816-0000-003	DIODE,5082-2835,S-BAR 8 VBR	04/08
ACTIVE	CR50009	3.00	4831-0000-001	DIODE,FDH333 ,SIGNAL,HCLL	00/00
ACTIVE	CR50010	-.--	4831-0000-001	DIODE,FDH333 ,SIGNAL,HCLL	00/00
ACTIVE	CR50011	-.--	4831-0000-001	DIODE,FDH333 ,SIGNAL,HCLL	00/00
ACTIVE	CR50012	4.00	4818-0000-015	DIODE,LM329C,6.9V ZENER REF *	00/00
ACTIVE	CR50013	1.00	4818-0000-003	DIODE, ZENER, 5, 1V, 5W *	00/00
ACTIVE	CR50014	-.--	4815-0000-003	DIODE, 1N4148 ,SIGNAL, 75PRV	00/00
ACTIVE	CR50015	-.--	4815-0000-003	DIODE, 1N4148 ,SIGNAL, 75PRV	00/00
ACTIVE	CR50016	-.--	4818-0000-015	DIODE,LM329C,6.9V ZENER REF *	00/00
ACTIVE	CR50017	1.00	4930-0100-200	DIODE,VARC,29PF/-3V	00/00
ACTIVE	CR50018	3.00	4825-0000-002	DIODE,PS083B ,PIN,.10PF, 3NS	00/00
ACTIVE	CR50019	-.--	4825-0000-002	DIODE,PS083B ,PIN,.10PF, 3NS	00/00
ACTIVE	CR50020	-.--	4825-0000-002	DIODE,PS083B ,PIN,.10PF, 3NS	00/00
ACTIVE	CR50021	-.--	4815-0000-003	DIODE, 1N4148 ,SIGNAL, 75PRV	00/00
ACTIVE	CR50028	1.00	4816-0000-001	DIODE,5082-2800,S BAR, 70VBR *	00/00
ACTIVE	CR50029	-.--	4815-0000-003	DIODE, 1N4148 ,SIGNAL, 75PRV	00/00

LI,283,2.MDATAB01 IFR SYSTEMS, INC.
MON, JAN 4, 1993, 12:46 PM

BILL OF MATERIAL LISTED BY REFERENCE DESIGNATOR
AS OF ALL DATES

ASSEMBLY PART NO.: 7010-4932-800
DESCRIPTION: PC BD ASSY-DISCR BD NO.1
ITEM MASTER REV: G ECO NO: 14073
REV OF THIS BOM: DATE OF LAST ECO: 03/05/92

STATUS	REFERENCE DESIGNATOR	QUANTITY PER ASSY	PART NUMBER	DESCRIPTION	EFFEC
ACTIVE	CR50030	-.--	4818-0000-015	DIODE,LM329C,6.9V ZENER REF *	00/00
ACTIVE	CR50031	-.--	0002-0000-000	*** REF DESIG NOT USED ***	00/00
ACTIVE	CR50032	-.--	4818-0000-015	DIODE,LM329C,6.9V ZENER REF *	00/00
ACTIVE	J50001	23.00	2200-2010-400	CONN,M SMB,PC MTG,STR,.453LG	00/00
ACTIVE	J50002	1.00	2115-1002-015	CONN,MOLEX 22-05-2151	00/00
ACTIVE	J50003	-.--	0002-0000-000	*** REF DESIG NOT USED ***	00/00
ACTIVE	J50004	1.00	2129-1001-010	CONN,HEADER,10-P STR 609-1027*	00/00
ACTIVE	J50005	-.--	2200-2010-400	CONN,M SMB,PC MTG,STR,.453LG	00/00
ACTIVE	J50006	-.--	2200-2010-400	CONN,M SMB,PC MTG,STR,.453LG	00/00
ACTIVE	J50007	-.--	2200-2010-400	CONN,M SMB,PC MTG,STR,.453LG	00/00
ACTIVE	J50008	-.--	2200-2010-400	CONN,M SMB,PC MTG,STR,.453LG	00/00
ACTIVE	J50009	-.--	2200-2010-400	CONN,M SMB,PC MTG,STR,.453LG	00/00
ACTIVE	J50010	-.--	2200-2010-400	CONN,M SMB,PC MTG,STR,.453LG	00/00
ACTIVE	J50011	-.--	2200-2010-400	CONN,M SMB,PC MTG,STR,.453LG	00/00
ACTIVE	J50012	-.--	2200-2010-400	CONN,M SMB,PC MTG,STR,.453LG	00/00
ACTIVE	J50013	-.--	2200-2010-400	CONN,M SMB,PC MTG,STR,.453LG	00/00
ACTIVE	J50014	-.--	2200-2010-400	CONN,M SMB,PC MTG,STR,.453LG	00/00
ACTIVE	J50015	-.--	2200-2010-400	CONN,M SMB,PC MTG,STR,.453LG	00/00
ACTIVE	J50016	-.--	2200-2010-400	CONN,M SMB,PC MTG,STR,.453LG	00/00
ACTIVE	K50001	2.00	4501-0000-003	RELAY,DIP REED,SPDT, 12VDC,.2A	00/00
ACTIVE	K50002	-.--	4501-0000-003	RELAY,DIP REED,SPDT, 12VDC,.2A	00/00
ACTIVE	L50001	6.00	1801-0229-001	IND, 2.2 UH,.4 OHM,1025-28	00/00

LI,283,2.MDATAB01 IFR SYSTEMS, INC.
MON, JAN 4, 1993, 12:46 PM

BILL OF MATERIAL LISTED BY REFERENCE DESIGNATOR
AS OF ALL DATES

ASSEMBLY PART NO.: 7010-4932-800
DESCRIPTION: PC BD ASSY-DISCR BD NO.1
ITEM MASTER REV: G ECO NO: 14073
REV OF THIS BOM: DATE OF LAST ECO: 03/05/92

STATUS	REFERENCE DESIGNATOR	QUANTITY PER ASSY	PART NUMBER	DESCRIPTION	EFFEC
ACTIVE	L50002	13.00	1801-0109-001	IND, 1.0 UH, 1 OHM,1025-20	00/0(
ACTIVE	L50003	-.--	1801-0229-001	IND, 2.2 UH,.4 OHM,1025-28	00/0(
ACTIVE	L50004	10.00	1801-0337-002	IND, .033UH,.035OHM102604	00/0(
ACTIVE	L50005	-.--	1801-0109-001	IND, 1.0 UH, 1 OHM,1025-20	00/0(
ACTIVE	L50006	-.--	1801-0337-002	IND, .033UH,.035OHM102604	00/0(
ACTIVE	L50008	-.--	1801-0337-002	IND, .033UH,.035OHM102604	00/0(
ACTIVE	L50009	-.--	1801-0229-001	IND, 2.2 UH,.4 OHM,1025-28	00/0(
ACTIVE	L50010	-.--	1801-0337-002	IND, .033UH,.035OHM102604	00/0(
ACTIVE	L50011	-.--	1801-0337-002	IND, .033UH,.035OHM102604	00/0(
ACTIVE	L50012	3.00	1801-0108-001	IND, .10UH,.08OHM,1025-94	00/0(
ACTIVE	L50013	-.--	1801-0229-001	IND, 2.2 UH,.4 OHM,1025-28	00/0(
ACTIVE	L50014	2.00	1801-0338-001	IND, .33UH,.2 OHM,1025-08	00/0(
ACTIVE	L50015	-.--	1801-0108-001	IND, .10UH,.08OHM,1025-94	00/0(
ACTIVE	L50017	-.--	1801-0108-001	IND, .10UH,.08OHM,1025-94	00/0(
ACTIVE	L50018	2.00	1801-0478-001	IND, .47UH,.35OHM,1025-12	00/0(
ACTIVE	L50020	3.00	1806-0108-002	IND, .1 UH,.13OHM,0819-00	00/0(
ACTIVE	L50021	-.--	0002-0000-000	*** REF DESIG NOT USED ***	00/0(
ACTIVE	L50022	-.--	1806-0108-002	IND, .1 UH,.13OHM,0819-00	00/0(
ACTIVE	L50023	-.--	1801-0109-001	IND, 1.0 UH, 1 OHM,1025-20	00/0(
ACTIVE	L50024	-.--	1801-0229-001	IND, 2.2 UH,.4 OHM,1025-28	00/0(
ACTIVE	L50025	-.--	1801-0478-001	IND, .47UH,.35OHM,1025-12	00/0(
ACTIVE	L50026	-.--	1801-0229-001	IND, 2.2 UH,.4 OHM,1025-28	00/0(

LI,283,2.MDATAB01 IFR SYSTEMS, INC.
MON, JAN 4, 1993, 12:46 PM

BILL OF MATERIAL LISTED BY REFERENCE DESIGNATOR
AS OF ALL DATES

ASSEMBLY PART NO.: 7010-4932-800
DESCRIPTION: PC BD ASSY-DISCR BD NO.1
ITEM MASTER REV: G ECO NO: 14073
REV OF THIS BOM: DATE OF LAST ECO: 03/05/92

STATUS	REFERENCE DESIGNATOR	QUANTITY PER ASSY	PART NUMBER	DESCRIPTION	EFFEC
ACTIVE	L50027	-.--	1801-0109-001	IND, 1.0 UH, 1 OHM,1025-20	00/00
ACTIVE	L50028	-.--	1801-0337-002	IND, .033UH,.035OHM102604	00/00
ACTIVE	L50029	-.--	1801-0109-001	IND, 1.0 UH, 1 OHM,1025-20	00/00
ACTIVE	L50030	-.--	0002-0000-000	*** REF DESIG NOT USED ***	00/00
ACTIVE	L50032	-.--	1801-0109-001	IND, 1.0 UH, 1 OHM,1025-20	00/00
ACTIVE	L50034	-.--	1801-0109-001	IND, 1.0 UH, 1 OHM,1025-20	00/00
ACTIVE	L50035	-.--	1801-0109-001	IND, 1.0 UH, 1 OHM,1025-20	00/00
ACTIVE	L50036	-.--	1801-0337-002	IND, .033UH,.035OHM102604	00/00
ACTIVE	L50038	-.--	1801-0109-001	IND, 1.0 UH, 1 OHM,1025-20	00/00
ACTIVE	L50039	-.--	1801-0337-002	IND, .033UH,.035OHM102604	00/00
ACTIVE	L50040	-.--	1801-0109-001	IND, 1.0 UH, 1 OHM,1025-20	00/00
ACTIVE	L50041	-.--	1801-0337-002	IND, .033UH,.035OHM102604	00/00
ACTIVE	L50042	1.00	1801-0000-007	IND, .068 UH, .060 OHM	00/00
ACTIVE	L50045	-.--	1801-0109-001	IND, 1.0 UH, 1 OHM,1025-20	00/00
ACTIVE	L50047	-.--	0002-0000-000	*** REF DESIG NOT USED ***	00/00
ACTIVE	L50048	-.--	0002-0000-000	*** REF DESIG NOT USED ***	00/00
ACTIVE	L50049	-.--	1806-0108-002	IND, .1 UH,.13OHM,0819-00	00/00
ACTIVE	L50050	-.--	1801-0337-002	IND, .033UH,.035OHM102604	00/00
ACTIVE	L50052	-.--	1801-0109-001	IND, 1.0 UH, 1 OHM,1025-20	00/00
ACTIVE	L50053	-.--	1801-0109-001	IND, 1.0 UH, 1 OHM,1025-20	00/00
ACTIVE	L50056	-.--	0002-0000-000	*** REF DESIG NOT USED ***	00/00
ACTIVE	L50058	-.--	0003-0000-000	***** FOR REFERENCE ONLY *****	00/00

BILL OF MATERIAL LISTED BY REFERENCE DESIGNATOR
AS OF ALL DATES

ASSEMBLY PART NO.: 7010-4932-800
DESCRIPTION: PC BD ASSY-DISCR BD NO.1
ITEM MASTER REV: G ECO NO: 14073
REV OF THIS BOM: DATE OF LAST ECO: 03/05/92

STATUS	REFERENCE DESIGNATOR	QUANTITY PER ASSY	PART NUMBER	DESCRIPTION	EFFEC
ACTIVE	L50059	-.--	0003-0000-000	***** FOR REFERENCE ONLY *****	00/00
ACTIVE	L50061	-.--	0003-0000-000	***** FOR REFERENCE ONLY *****	00/00
ACTIVE	L50063	-.--	1801-0338-001	IND, .33UH,.2 OHM,1025-08	00/00
ACTIVE	MXR50001	2.00	5250-0804-301	MIXER, 700-1500MHz TO-8 *	00/00
ACTIVE	MXR50002	-.--	5250-0804-301	MIXER, 700-1500MHz TO-8 *	00/00
ACTIVE	MXR50003	1.00	5250-0000-008	PHASE DET.,FLTPK,5-1000MHz *	00/00
ACTIVE	Q50001	1.00	4805-0000-003	TRANS, 2N3646 ,NPN HS SW	00/00
ACTIVE	Q50002	14.00	4807-0000-002	TRANS, 2N3905 ,PNP HS SW	00/00
ACTIVE	Q50003	-.--	4807-0000-002	TRANS, 2N3905 ,PNP HS SW	00/00
ACTIVE	Q50004	8.00	4807-0000-001	TRANS, 2N3903 ,NPN HS SW	00/00
ACTIVE	Q50005	-.--	4807-0000-002	TRANS, 2N3905 ,PNP HS SW	00/00
ACTIVE	Q50006	-.--	4807-0000-002	TRANS, 2N3905 ,PNP HS SW	00/00
ACTIVE	Q50007	-.--	4807-0000-001	TRANS, 2N3903 ,NPN HS SW	00/00
ACTIVE	Q50008	-.--	4807-0000-002	TRANS, 2N3905 ,PNP HS SW	00/00
ACTIVE	Q50009	-.--	4807-0000-002	TRANS, 2N3905 ,PNP HS SW	00/00
ACTIVE	Q50010	6.00	4809-0000-005	TRANS,66382 ,NPN HF AMP	00/00
ACTIVE	Q50011	-.--	4807-0000-002	TRANS, 2N3905 ,PNP HS SW	00/00
ACTIVE	Q50012	-.--	4807-0000-001	TRANS, 2N3903 ,NPN HS SW	00/00
ACTIVE	Q50013	-.--	4807-0000-002	TRANS, 2N3905 ,PNP HS SW	00/00
ACTIVE	Q50014	-.--	4807-0000-001	TRANS, 2N3903 ,NPN HS SW	00/00
ACTIVE	Q50015	-.--	4807-0000-002	TRANS, 2N3905 ,PNP HS SW	00/00
ACTIVE	Q50016	1.00	4801-0000-001	TRANSISTOR NPN HS SW *	00/00

BILL OF MATERIAL LISTED BY REFERENCE DESIGNATOR
AS OF ALL DATES

ASSEMBLY PART NO.: 7010-4932-800
DESCRIPTION: PC BD ASSY-DISCR BD NO.1
ITEM MASTER REV: G ECO NO: 14073
REV OF THIS BOM: DATE OF LAST ECO: 03/05/92

STATUS	REFERENCE DESIGNATOR	QUANTITY PER ASSY	PART NUMBER	DESCRIPTION	EFFEC
ACTIVE	Q50017	1.00	4805-0000-001	TRANS,2N2907A,PNP HS SW (3251)	00/00
ACTIVE	Q50018	-.--	4809-0000-005	TRANS,66382 ,NPN HF AMP	00/00
ACTIVE	Q50019	4.00	4803-0000-004	TRANS,NPN,LP/VHF AMP	00/00
ACTIVE	Q50020	7.00	5010-0203-100	TRANS,HXTR NPN HF AMP *	00/00
ACTIVE	Q50021	-.--	5010-0203-100	TRANS,HXTR NPN HF AMP *	00/00
ACTIVE	Q50022	-.--	4803-0000-004	TRANS,NPN,LP/VHF AMP	00/00
ACTIVE	Q50023	-.--	0002-0000-000	*** REF DESIG NOT USED ***	00/00
ACTIVE	Q50024	-.--	0002-0000-000	*** REF DESIG NOT USED ***	00/00
ACTIVE	Q50025	-.--	0002-0000-000	*** REF DESIG NOT USED ***	00/00
ACTIVE	Q50026	-.--	4807-0000-002	TRANS, 2N3905 ,PNP HS SW	00/00
ACTIVE	Q50027	-.--	4807-0000-001	TRANS, 2N3903 ,NPN HS SW	00/00
ACTIVE	Q50028	-.--	0002-0000-000	*** REF DESIG NOT USED ***	00/00
ACTIVE	Q50029	-.--	5010-0203-100	TRANS,HXTR NPN HF AMP *	00/00
ACTIVE	Q50030	1.00	5050-2401-000	TRANS,VN10KM N-CH VMOSFET *	00/00
ACTIVE	Q50031	-.--	4807-0000-001	TRANS, 2N3903 ,NPN HS SW	00/00
ACTIVE	Q50032	-.--	5010-0203-100	TRANS,HXTR NPN HF AMP *	00/00
ACTIVE	Q50033	-.--	5010-0203-100	TRANS,HXTR NPN HF AMP *	00/00
ACTIVE	Q50034	-.--	4809-0000-005	TRANS,66382 ,NPN HF AMP	00/00
ACTIVE	Q50035	-.--	4807-0000-002	TRANS, 2N3905 ,PNP HS SW	00/00
ACTIVE	Q50036	-.--	4803-0000-004	TRANS,NPN,LP/VHF AMP	00/00
ACTIVE	Q50037	-.--	5010-0203-100	TRANS,HXTR NPN HF AMP *	00/00
ACTIVE	Q50038	-.--	4809-0000-005	TRANS,66382 ,NPN HF AMP	00/00

BILL OF MATERIAL LISTED BY REFERENCE DESIGNATOR
AS OF ALL DATES

ASSEMBLY PART NO.: 7010-4932-800
DESCRIPTION: PC BD ASSY-DISCR BD NO.1
ITEM MASTER REV: G ECO NO: 14073
REV OF THIS BOM: DATE OF LAST ECO: 03/05/92

STATUS	REFERENCE DESIGNATOR	QUANTITY PER ASSY	PART NUMBER	DESCRIPTION		EFFEC
ACTIVE	Q50039	-.--	4803-0000-004	TRANS,NPN,LP/VHF AMP		00/00
ACTIVE	Q50040	-.--	4807-0000-002	TRANS, 2N3905 ,PNP HS SW		00/00
ACTIVE	Q50041	-.--	4807-0000-001	TRANS, 2N3903 ,NPN HS SW		00/00
ACTIVE	Q50042	-.--	4807-0000-002	TRANS, 2N3905 ,PNP HS SW		00/00
ACTIVE	Q50043	-.--	4807-0000-001	TRANS, 2N3903 ,NPN HS SW		00/00
ACTIVE	Q50044	-.--	5010-0203-100	TRANS,HXTR NPN HF AMP	*	00/00
ACTIVE	Q50045	-.--	4809-0000-005	TRANS,66382 ,NPN HF AMP		00/00
ACTIVE	Q50046	-.--	4809-0000-005	TRANS,66382 ,NPN HF AMP		00/00
ACTIVE	Q50047	-.--	4807-0000-002	TRANS, 2N3905 ,PNP HS SW		00/00
ACTIVE	Q50048	1.00	4801-0000-004	TRANS, 2N2905 ,PNP HS SW		00/00
ACTIVE	R50001	9.00	4701-0680-003	RES, 5, 1/8W, 68 OHM		00/00
ACTIVE	R50002	12.00	4701-0101-003	RES, 5, 1/8W, 100 OHM	*	00/00
ACTIVE	R50003	8.00	4701-0331-003	RES, 5, 1/8W, 330 OHM		00/00
ACTIVE	R50004	-.--	4701-0331-003	RES, 5, 1/8W, 330 OHM		00/00
ACTIVE	R50005	3.00	4701-0122-003	RES, 5, 1/8W, 1.2K OHM		00/00
ACTIVE	R50006	7.00	4701-0681-003	RES, 5, 1/8W, 680 OHM		00/00
ACTIVE	R50007	10.00	4701-0222-003	RES, 5, 1/8W, 2.2K OHM		00/00
ACTIVE	R50008	-.--	4701-0101-003	RES, 5, 1/8W, 100 OHM	*	00/00
ACTIVE	R50009	-.--	4701-0222-003	RES, 5, 1/8W, 2.2K OHM		00/00
ACTIVE	R50010	15.00	4701-0471-003	RES, 5, 1/8W, 470 OHM		00/00
ACTIVE	R50011	-.--	4701-0222-003	RES, 5, 1/8W, 2.2K OHM		00/00
ACTIVE	R50012	1.00	4752-0102-002	POT 1K OHM		00/00

LI,283,2 MDATAB01 IFR SYSTEMS, INC.
MON, JAN 4, 1993, 12:46 PM

BILL OF MATERIAL LISTED BY REFERENCE DESIGNATOR
AS OF ALL DATES

ASSEMBLY PART NO.: 7010-4932-800
DESCRIPTION: PC BD ASSY-DISCR BD NO.1
ITEM MASTER REV: G ECO NO: 14073
REV OF THIS BOM: DATE OF LAST ECO: 03/05/92

STATUS	REFERENCE DESIGNATOR	QUANTITY PER ASSY	PART NUMBER	DESCRIPTION			EFFEC
ACTIVE	R50013	1.00	4701-0121-003	RES, 5, 1/8W, 120 OHM			00/00
ACTIVE	R50014	12.00	4701-0103-003	RES, 5, 1/8W, 10K OHM		*	00/00
ACTIVE	R50015	3.00	4701-0272-003	RES, 5, 1/8W, 2.7K OHM			00/00
ACTIVE	R50016	3.00	4701-0183-003	RES,5,1/8W, 18K OHM		*	00/00
ACTIVE	R50017	11.00	4701-0102-003	RES, 5, 1/8W, 1.0K OHM			00/00
ACTIVE	R50018	-.--	4701-0331-003	RES, 5, 1/8W, 330 OHM			00/00
ACTIVE	R50019	4.00	4701-0330-003	RES, 5, 1/8W, 33 OHM			00/00
ACTIVE	R50020	-.--	4701-0331-003	RES, 5, 1/8W, 330 OHM			00/00
ACTIVE	R50021	-.--	4701-0681-003	RES, 5, 1/8W, 680 OHM			00/00
ACTIVE	R50022	-.--	4701-0102-003	RES, 5, 1/8W, 1.0K OHM			00/00
ACTIVE	R50023	4.00	4701-0223-003	RES, 5, 1/8W, 22K OHM			00/00
ACTIVE	R50024	-.--	4701-0331-003	RES, 5, 1/8W, 330 OHM			00/00
ACTIVE	R50025	-.--	4701-0103-003	RES, 5, 1/8W, 10K OHM		*	00/00
ACTIVE	R50026	2.00	4706-1002-001	RES, 1, 1/4W, 10.0K OHM		*	00/00
ACTIVE	R50027	-.--	4701-0681-003	RES, 5, 1/8W, 680 OHM			00/00
ACTIVE	R50028	-.--	4706-1002-001	RES, 1, 1/4W, 10.0K OHM		*	00/00
ACTIVE	R50029	9.00	4701-0181-003	RES, 5, 1/8W, 180 OHM			00/00
ACTIVE	R50030	-.--	4701-0103-003	RES, 5, 1/8W, 10K OHM		*	00/00
ACTIVE	R50031	-.--	4701-0103-003	RES, 5, 1/8W, 10K OHM		*	00/00
ACTIVE	R50032	-.--	4701-0103-003	RES, 5, 1/8W, 10K OHM		*	00/00
ACTIVE	R50033	-.--	4701-0181-003	RES, 5, 1/8W, 180 OHM			00/00
ACTIVE	R50034	9.00	4701-0470-003	RES, 5, 1/8W, 47 OHM			00/00

BILL OF MATERIAL LISTED BY REFERENCE DESIGNATOR
AS OF ALL DATES

ASSEMBLY PART NO.: 7010-4932-800
DESCRIPTION: PC BD ASSY-DISCR BD NO.1
ITEM MASTER REV: G ECO NO: 14073
REV OF THIS BOM: DATE OF LAST ECO: 03/05/92

STATUS	REFERENCE DESIGNATOR	QUANTITY PER ASSY	PART NUMBER	DESCRIPTION			EFFEC
ACTIVE	R50035	3.00	4701-0271-003	RES, 5, 1/8W, 270	OHM		00/00
ACTIVE	R50036	-.--	4701-0181-003	RES, 5, 1/8W, 180	OHM		00/00
ACTIVE	R50037	-.--	4701-0181-003	RES, 5, 1/8W, 180	OHM		00/00
ACTIVE	R50038	-.--	4701-0103-003	RES, 5, 1/8W, 10K OHM		*	00/00
ACTIVE	R50039	2.00	4701-0123-003	RES, 5, 1/8W, 12K	OHM		00/00
ACTIVE	R50040	-.--	4701-0101-003	RES, 5, 1/8W, 100 OHM		*	00/00
ACTIVE	R50041	6.00	4701-0472-003	RES, 5, 1/8W, 4.7K	OHM		00/00
ACTIVE	R50042	-.--	4701-0331-003	RES, 5, 1/8W, 330	OHM		00/00
ACTIVE	R50043	-.--	4701-0470-003	RES, 5, 1/8W, 47	OHM		00/00
ACTIVE	R50044	-.--	4701-0472-003	RES, 5, 1/8W, 4.7K	OHM		00/00
ACTIVE	R50045	-.--	4701-0103-003	RES, 5, 1/8W, 10K OHM		*	00/00
ACTIVE	R50046	-.--	4701-0330-003	RES, 5, 1/8W, 33	OHM		00/00
ACTIVE	R50047	-.--	4701-0183-003	RES,5,1/8W, 18K OHM		*	00/00
ACTIVE	R50048	-.--	4701-0101-003	RES, 5, 1/8W, 100 OHM		*	00/00
ACTIVE	R50049	-.--	4701-0122-003	RES, 5, 1/8W, 1.2K	OHM		00/00
ACTIVE	R50050	-.--	4701-0122-003	RES, 5, 1/8W, 1.2K	OHM		00/00
ACTIVE	R50051	-.--	0002-0000-000	*** REF DESIG NOT USED		***	00/00
ACTIVE	R50052	-.--	4701-0101-003	RES, 5, 1/8W, 100 OHM		*	00/00
ACTIVE	R50053	-.--	4701-0222-003	RES, 5, 1/8W, 2.2K	OHM		00/00
ACTIVE	R50054	-.--	4701-0330-003	RES, 5, 1/8W, 33	OHM		00/00
ACTIVE	R50055	-.--	4701-0101-003	RES, 5, 1/8W, 100 OHM		*	00/00
ACTIVE	R50056	7.00	4701-0473-003	RES, 5, 1/8W, 47K OHM		*	00/00

BILL OF MATERIAL LISTED BY REFERENCE DESIGNATOR
AS OF ALL DATES

ASSEMBLY PART NO.: 7010-4932-800
DESCRIPTION: PC BD ASSY-DISCR BD NO.1
ITEM MASTER REV: G ECO NO: 14073
REV OF THIS BOM: DATE OF LAST ECO: 03/05/92

STATUS	REFERENCE DESIGNATOR	QUANTITY PER ASSY	PART NUMBER	DESCRIPTION		EFFEC
ACTIVE	R50057	5.00	4701-0152-003	RES, 5, 1/8W, 1.5K OHM	*	00/00
ACTIVE	R50058	-.--	4701-0473-003	RES, 5, 1/8W, 47K OHM	*	00/00
ACTIVE	R50059	-.--	4701-0152-003	RES, 5, 1/8W, 1.5K OHM	*	00/00
ACTIVE	R50060	3.00	4752-0503-002	POT 50K OHM		00/00
ACTIVE	R50061	1.00	4701-0822-003	RES,5,1/8W 8.2K OHM	*	00/00
ACTIVE	R50062	-.--	4701-0102-003	RES, 5, 1/8W, 1.0K OHM		00/00
ACTIVE	R50063	-.--	4701-0101-003	RES, 5, 1/8W, 100 OHM	*	00/00
ACTIVE	R50064	-.--	4701-0473-003	RES, 5, 1/8W, 47K OHM	*	00/00
ACTIVE	R50065	-.--	4752-0503-002	POT 50K OHM		00/00
ACTIVE	R50066	-.--	4701-0330-003	RES, 5, 1/8W, 33 OHM		00/00
ACTIVE	R50067	-.--	4701-0183-003	RES,5,1/8W, 18K OHM	*	00/00
ACTIVE	R50068	-.--	4701-0222-003	RES, 5, 1/8W, 2.2K OHM		00/00
ACTIVE	R50069	1.00	4752-0203-002	POT 20K OHM		00/00
ACTIVE	R50070	-.--	4701-0472-003	RES, 5, 1/8W, 4.7K OHM		00/00
ACTIVE	R50071	2.00	4701-0823-003	RES, 5, 1/8W, 82K OHM		00/00
ACTIVE	R50072	4.00	4701-0273-003	RES, 5, 1/8W, 27K OHM		00/00
ACTIVE	R50073	-.--	4701-0272-003	RES, 5, 1/8W, 2.7K OHM		00/00
ACTIVE	R50074	-.--	4701-0472-003	RES, 5, 1/8W, 4.7K OHM		00/00
ACTIVE	R50075	1.00	4701-0563-003	RES, 5, 1/8W 56K OHM	*	00/00
ACTIVE	R50076	3.00	4701-0561-003	RES, 5, 1/8W, 560 OHM		00/00
ACTIVE	R50077	1.00	4752-0103-002	POT 10K OHM		00/00
ACTIVE	R50078	-.--	4701-0103-003	RES, 5, 1/8W, 10K OHM	*	00/00

BILL OF MATERIAL LISTED BY REFERENCE DESIGNATOR
AS OF ALL DATES

ASSEMBLY PART NO.: 7010-4932-800
DESCRIPTION: PC BD ASSY-DISCR BD NO.1
ITEM MASTER REV: G ECO NO: 14073
REV OF THIS BOM: DATE OF LAST ECO: 03/05/92

STATUS	REFERENCE DESIGNATOR	QUANTITY PER ASSY	PART NUMBER	DESCRIPTION			EFFEC
ACTIVE	R50079	-.--	4701-0331-003	RES, 5, 1/8W,	330	OHM	00/00
ACTIVE	R50080	4.00	4701-0104-003	RES, 5, 1/8W,	100K	OHM	00/00
ACTIVE	R50081	1.00	4701-0334-003	RES, 5, 1/8W,	330K	OHM	00/00
ACTIVE	R50082	-.--	4701-0223-003	RES, 5, 1/8W,	22K	OHM	00/00
ACTIVE	R50083	-.--	4701-0272-003	RES, 5, 1/8W,	2.7K	OHM	00/00
ACTIVE	R50084	11.00	4701-0221-003	RES, 5, 1/8W,	220	OHM	00/00
ACTIVE	R50085	-.--	4701-0152-003	RES, 5, 1/8W,	1.5K OHM	*	00/00
ACTIVE	R50086	-.--	4701-0103-003	RES, 5, 1/8W,	10K OHM	*	00/00
ACTIVE	R50087	-.--	4701-0104-003	RES, 5, 1/8W,	100K	OHM	00/00
ACTIVE	R50088	-.--	4701-0471-003	RES, 5, 1/8W,	470	OHM	00/00
ACTIVE	R50089	1.00	4701-0124-003	RES, 5, 1/8W,	120K	OHM	00/00
ACTIVE	R50090	1.00	4752-0104-002	POT 100K OHM			00/00
ACTIVE	R50091	-.--	4701-0104-003	RES, 5, 1/8W,	100K	OHM	00/00
ACTIVE	R50092	-.--	4701-0102-003	RES, 5, 1/8W,	1.0K	OHM	00/00
ACTIVE	R50093	-.--	4701-0223-003	RES, 5, 1/8W,	22K	OHM	00/00
ACTIVE	R50094	-.--	4701-0271-003	RES, 5, 1/8W,	270	OHM	00/00
ACTIVE	R50095	-.--	4701-0823-003	RES, 5, 1/8W,	82K	OHM	00/00
ACTIVE	R50096	-.--	4701-0221-003	RES, 5, 1/8W,	220	OHM	00/00
ACTIVE	R50097	-.--	4701-0221-003	RES, 5, 1/8W,	220	OHM	00/00
ACTIVE	R50098	-.--	4701-0472-003	RES, 5, 1/8W,	4.7K	OHM	00/00
ACTIVE	R50099	-.--	4701-0102-003	RES, 5, 1/8W,	1.0K	OHM	00/00
ACTIVE	R50100	-.--	4701-0123-003	RES, 5, 1/8W,	12K	OHM	00/00

BILL OF MATERIAL LISTED BY REFERENCE DESIGNATOR
AS OF ALL DATES

ASSEMBLY PART NO.: 7010-4932-800
DESCRIPTION: PC BD ASSY-DISCR BD NO.1
ITEM MASTER REV: G ECO NO: 14073
REV OF THIS BOM: DATE OF LAST ECO: 03/05/92

STATUS	REFERENCE DESIGNATOR	QUANTITY PER ASSY	PART NUMBER	DESCRIPTION				EFFEC
ACTIVE	R50101	-.--	4701-0273-003	RES, 5, 1/8W,	27K	OHM		00/00
ACTIVE	R50102	-.--	4701-0221-003	RES, 5, 1/8W,	220	OHM		00/00
ACTIVE	R50103	-.--	4701-0471-003	RES, 5, 1/8W,	470	OHM		00/00
ACTIVE	R50104	-.--	4701-0680-003	RES, 5, 1/8W,	68	OHM		00/00
ACTIVE	R50105	-.--	4701-0680-003	RES, 5, 1/8W,	68	OHM		00/00
ACTIVE	R50106	-.--	4701-0271-003	RES, 5, 1/8W,	270	OHM		00/00
ACTIVE	R50107	-.--	4701-0471-003	RES, 5, 1/8W,	470	OHM		00/00
ACTIVE	R50108	6.00	4701-0151-003	RES, 5, 1/8W,	150	OHM		00/00
ACTIVE	R50109	1.00	4753-0201-002	POT 200 OHM				00/00
ACTIVE	R50110	3.00	4701-0390-003	RES, 5, 1/8W,	39	OHM		00/00
ACTIVE	R50111	-.--	4701-0151-003	RES, 5, 1/8W,	150	OHM		00/00
ACTIVE	R50112	-.--	4701-0471-003	RES, 5, 1/8W,	470	OHM		00/00
ACTIVE	R50113	-.--	4701-0223-003	RES, 5, 1/8W,	22K	OHM		00/00
ACTIVE	R50114 SAT	-.--	4701-0151-003	RES, 5, 1/8W,	150	OHM		00/00
ACTIVE	R50115	-.--	4701-0680-003	RES, 5, 1/8W,	68	OHM		00/00
ACTIVE	R50116	-.--	4701-0471-003	RES, 5, 1/8W,	470	OHM		00/00
ACTIVE	R50117	-.--	4701-0181-003	RES, 5, 1/8W,	180	OHM		00/00
ACTIVE	R50118	2.00	4702-0181-003	RES, 5, 1/4W,	180	OHM		00/00
ACTIVE	R50119	-.--	4701-0101-003	RES, 5, 1/8W,	100 OHM		*	00/00
ACTIVE	R50120	-.--	4701-0181-003	RES, 5, 1/8W,	180	OHM		00/00
ACTIVE	R50122	1.00	4701-0560-003	RES, 5, 1/8W,	56	OHM		00/00
ACTIVE	R50123	1.00	4702-0331-003	RES, 5%, 1/4W	330 OHM		*	00/00

BILL OF MATERIAL LISTED BY REFERENCE DESIGNATOR
AS OF ALL DATES

ASSEMBLY PART NO.: 7010-4932-800
DESCRIPTION: PC BD ASSY-DISCR BD NO.1
ITEM MASTER REV: G ECO NO: 14073
REV OF THIS BOM: DATE OF LAST ECO: 03/05/92

STATUS	REFERENCE DESIGNATOR	QUANTITY PER ASSY	PART NUMBER	DESCRIPTION	EFFEC
ACTIVE	R50124	-.--	4701-0273-003	RES, 5, 1/8W, 27K OHM	00/00
ACTIVE	R50125	-.--	4701-0181-003	RES, 5, 1/8W, 180 OHM	00/00
ACTIVE	R50126	-.--	4702-0181-003	RES, 5, 1/4W, 180 OHM	00/00
ACTIVE	R50127	-.--	0002-0000-000	*** REF DESIG NOT USED ***	00/00
ACTIVE	R50128	-.--	0002-0000-000	*** REF DESIG NOT USED ***	00/00
ACTIVE	R50129	-.--	4701-0103-003	RES, 5, 1/8W, 10K OHM *	00/00
ACTIVE	R50130	-.--	0002-0000-000	*** REF DESIG NOT USED ***	00/00
ACTIVE	R50131	1.00	4702-0151-003	RES, 5, 1/4W, 150 OHM	00/00
ACTIVE	R50132	-.--	4701-0471-003	RES, 5, 1/8W, 470 OHM	00/00
ACTIVE	R50133	-.--	4701-0471-003	RES, 5, 1/8W, 470 OHM	00/00
ACTIVE	R50134	-.--	4701-0221-003	RES, 5, 1/8W, 220 OHM	00/00
ACTIVE	R50135	-.--	4701-0331-003	RES, 5, 1/8W, 330 OHM	00/00
ACTIVE	R50136	-.--	4701-0470-003	RES, 5, 1/8W, 47 OHM	00/00
ACTIVE	R50137	-.--	0002-0000-000	*** REF DESIG NOT USED ***	00/00
ACTIVE	R50138	1.00	4701-0392-003	RES, 5, 1/8W, 3.9K OHM *	00/00
ACTIVE	R50139	-.--	4701-0221-003	RES, 5, 1/8W, 220 OHM	00/00
ACTIVE	R50140	-.--	4701-0471-003	RES, 5, 1/8W, 470 OHM	00/00
ACTIVE	R50141	-.--	4701-0151-003	RES, 5, 1/8W, 150 OHM	00/00
ACTIVE	R50142	-.--	4701-0103-003	RES, 5, 1/8W, 10K OHM *	00/00
ACTIVE	R50143	-.--	0002-0000-000	*** REF DESIG NOT USED ***	00/00
ACTIVE	R50144	-.--	0002-0000-000	*** REF DESIG NOT USED ***	00/00
ACTIVE	R50145	-.--	0002-0000-000	*** REF DESIG NOT USED ***	00/00

BILL OF MATERIAL LISTED BY REFERENCE DESIGNATOR
AS OF ALL DATES

ASSEMBLY PART NO.: 7010-4932-800
DESCRIPTION: PC BD ASSY-DISCR BD NO.1
ITEM MASTER REV: G ECO NO: 14073
REV OF THIS BOM: DATE OF LAST ECO: 03/05/92

STATUS	REFERENCE DESIGNATOR	QUANTITY PER ASSY	PART NUMBER	DESCRIPTION			EFFEC
ACTIVE	R50146	-.--	4701-0470-003	RES, 5, 1/8W,	47	OHM	00/00
ACTIVE	R50147	-.--	4701-0473-003	RES, 5, 1/8W,	47K OHM	*	00/00
ACTIVE	R50148	-.--	4701-0680-003	RES, 5, 1/8W,	68	OHM	00/00
ACTIVE	R50149	-.--	0002-0000-000	***	REF DESIG NOT USED	***	00/00
ACTIVE	R50150	-.--	4701-0470-003	RES, 5, 1/8W,	47	OHM	00/00
ACTIVE	R50151	-.--	4701-0681-003	RES, 5, 1/8W,	680	OHM	00/00
ACTIVE	R50152	-.--	4701-0471-003	RES, 5, 1/8W,	470	OHM	00/00
ACTIVE	R50153	-.--	4701-0470-003	RES, 5, 1/8W,	47	OHM	00/00
ACTIVE	R50154	-.--	4701-0470-003	RES, 5, 1/8W,	47	OHM	00/00
ACTIVE	R50155	-.--	4701-0222-003	RES, 5, 1/8W,	2.2K	OHM	00/00
ACTIVE	R50156	-.--	4701-0152-003	RES, 5, 1/8W,	1.5K OHM	*	00/00
ACTIVE	R50157	-.--	4701-0221-003	RES, 5, 1/8W,	220	OHM	00/00
ACTIVE	R50158	-.--	4752-0503-002	POT 50K OHM			00/00
ACTIVE	R50159	-.--	4701-0473-003	RES, 5, 1/8W,	47K OHM	*	00/00
ACTIVE	R50160	2.00	4701-0150-003	RES, 5, 1/8W,	15	OHM	00/00
ACTIVE	R50161	-.--	4701-0681-003	RES, 5, 1/8W,	680	OHM	00/00
ACTIVE	R50162	-.--	4701-0103-003	RES, 5, 1/8W,	10K OHM	*	00/00
ACTIVE	R50163	-.--	4701-0681-003	RES, 5, 1/8W,	680	OHM	00/00
ACTIVE	R50164	-.--	4701-0222-003	RES, 5, 1/8W,	2.2K	OHM	00/00
ACTIVE	R50165	-.--	4701-0680-003	RES, 5, 1/8W,	68	OHM	00/00
ACTIVE	R50166	-.--	4701-0101-003	RES, 5, 1/8W,	100 OHM	*	00/00
ACTIVE	R50167	-.--	4701-0561-003	RES, 5, 1/8W,	560	OHM	00/00

BILL OF MATERIAL LISTED BY REFERENCE DESIGNATOR
AS OF ALL DATES

ASSEMBLY PART NO.: 7010-4932-800
DESCRIPTION: PC BD ASSY-DISCR BD NO.1
ITEM MASTER REV: G ECO NO: 14073
REV OF THIS BOM: DATE OF LAST ECO: 03/05/92

STATUS	REFERENCE DESIGNATOR	QUANTITY PER ASSY	PART NUMBER	DESCRIPTION			EFFEC
ACTIVE	R50168	5.00	4701-0220-003	RES,5, 1/8W 22 OHM		*	04/0E
ACTIVE	R50169	-.--	4701-0101-003	RES, 5, 1/8W, 100 OHM		*	00/0(
ACTIVE	R50170	-.--	4701-0221-003	RES, 5, 1/8W, 220	OHM		00/0(
ACTIVE	R50171	-.--	4701-0473-003	RES, 5, 1/8W, 47K OHM		*	00/0(
ACTIVE	R50172	-.--	4701-0473-003	RES, 5, 1/8W, 47K OHM		*	00/0(
ACTIVE	R50173	-.--	4701-0150-003	RES, 5, 1/8W, 15	OHM		00/0(
ACTIVE	R50174	-.--	4701-0102-003	RES, 5, 1/8W, 1.0K	OHM		00/0(
ACTIVE	R50175	-.--	4701-0102-003	RES, 5, 1/8W, 1.0K	OHM		00/0(
ACTIVE	R50176	-.--	4701-0681-003	RES, 5, 1/8W, 680	OHM		00/0(
ACTIVE	R50177	-.--	4701-0680-003	RES, 5, 1/8W, 68	OHM		00/0(
ACTIVE	R50178	-.--	4701-0221-003	RES, 5, 1/8W, 220	OHM		00/0(
ACTIVE	R50179	-.--	4701-0471-003	RES, 5, 1/8W, 470	OHM		00/0(
ACTIVE	R50180	-.--	4701-0273-003	RES, 5, 1/8W, 27K	OHM		00/0(
ACTIVE	R50181	-.--	4701-0102-003	RES, 5, 1/8W, 1.0K	OHM		00/0(
ACTIVE	R50182	1.00	4752-0501-002	POT, 500 OHM			00/0(
ACTIVE	R50183	-.--	4701-0470-003	RES, 5, 1/8W, 47	OHM		00/0(
ACTIVE	R50184	-.--	4701-0101-003	RES, 5, 1/8W, 100 OHM		*	00/0(
ACTIVE	R50185	-.--	4701-0471-003	RES, 5, 1/8W, 470	OHM		00/0(
ACTIVE	R50186	-.--	4701-0102-003	RES, 5, 1/8W, 1.0K	OHM		00/0(
ACTIVE	R50187	-.--	4701-0102-003	RES, 5, 1/8W, 1.0K	OHM		00/0(
ACTIVE	R50188	-.--	4701-0222-003	RES, 5, 1/8W, 2.2K	OHM		00/0(
ACTIVE	R50189	-.--	4701-0390-003	RES, 5, 1/8W, 39	OHM		00/0(

LI,283,2.MDATAB01 IFR SYSTEMS, INC.
MON, JAN 4, 1993, 12:46 PM

BILL OF MATERIAL LISTED BY REFERENCE DESIGNATOR
AS OF ALL DATES

ASSEMBLY PART NO.: 7010-4932-800
DESCRIPTION: PC BD ASSY-DISCR BD NO.1
ITEM MASTER REV: G ECO NO: 14073
REV OF THIS BOM: DATE OF LAST ECO: 03/05/92

STATUS	REFERENCE DESIGNATOR	QUANTITY PER ASSY	PART NUMBER	DESCRIPTION	EFFEC
ACTIVE	R50190	-.--	4701-0102-003	RES, 5, 1/8W, 1.0K OHM	00/00
ACTIVE	R50191	-.--	4701-0561-003	RES, 5, 1/8W, 560 OHM	00/00
ACTIVE	R50193	-.--	4701-0680-003	RES, 5, 1/8W, 68 OHM	00/00
ACTIVE	R50194	-.--	4701-0471-003	RES, 5, 1/8W, 470 OHM	00/00
ACTIVE	R50195	-.--	4701-0101-003	RES, 5, 1/8W, 100 OHM *	00/00
ACTIVE	R50196	-.--	4701-0471-003	RES, 5, 1/8W, 470 OHM	00/00
ACTIVE	R50197	-.--	4701-0104-003	RES, 5, 1/8W, 100K OHM	00/00
ACTIVE	R50198	-.--	4701-0680-003	RES, 5, 1/8W, 68 OHM	00/00
ACTIVE	R50199	-.--	4701-0152-003	RES, 5, 1/8W, 1.5K OHM *	00/00
ACTIVE	R50200	-.--	4701-0471-003	RES, 5, 1/8W, 470 OHM	00/00
ACTIVE	R50201	-.--	4701-0472-003	RES, 5, 1/8W, 4.7K OHM	00/00
ACTIVE	R50202	-.--	0002-0000-000	*** REF DESIG NOT USED ***	00/00
ACTIVE	R50203	-.--	4701-0470-003	RES, 5, 1/8W, 47 OHM	00/00
ACTIVE	R50204	-.--	4701-0181-003	RES, 5, 1/8W, 180 OHM	00/00
ACTIVE	R50205	-.--	4701-0181-003	RES, 5, 1/8W, 180 OHM	00/00
ACTIVE	R50206	-.--	4701-0221-003	RES, 5, 1/8W, 220 OHM	00/00
ACTIVE	R50207	-.--	4701-0221-003	RES, 5, 1/8W, 220 OHM	00/00
ACTIVE	R50208	-.--	0002-0000-000	*** REF DESIG NOT USED ***	00/00
ACTIVE	R50209	-.--	4701-0151-003	RES, 5, 1/8W, 150 OHM	00/00
ACTIVE	R50210	-.--	4701-0222-003	RES, 5, 1/8W, 2.2K OHM	00/00
ACTIVE	R50211	-.--	4701-0222-003	RES, 5, 1/8W, 2.2K OHM	00/00
ACTIVE	R50212	-.--	4701-0220-003	RES,5, 1/8W 22 OHM *	04/08

BILL OF MATERIAL LISTED BY REFERENCE DESIGNATOR
AS OF ALL DATES

ASSEMBLY PART NO.: 7010-4932-800
DESCRIPTION: PC BD ASSY-DISCR BD NO.1
ITEM MASTER REV: G ECO NO: 14073
REV OF THIS BOM: DATE OF LAST ECO: 03/05/92

STATUS	REFERENCE DESIGNATOR	QUANTITY PER ASSY	PART NUMBER	DESCRIPTION	EFFEC
ACTIVE	R50213	-.--	4701-0220-003	RES,5, 1/8W 22 OHM *	04/08
ACTIVE	R50214	-.--	4701-0220-003	RES,5, 1/8W 22 OHM *	04/08
ACTIVE	R50215	-.--	4701-0220-003	RES,5, 1/8W 22 OHM *	04/08
ACTIVE	R50216	-.--	4701-0151-003	RES, 5, 1/8W, 150 OHM	00/00
ACTIVE	R50217	-.--	0002-0000-000	*** REF DESIG NOT USED ***	00/00
ACTIVE	R50218	2.00	4722-1500-001	RES, 1% 1/8W 150 OHM *	00/00
ACTIVE	R50219	-.--	4722-1500-001	RES, 1% 1/8W 150 OHM *	00/00
ACTIVE	R50220	-.--	4701-0390-003	RES, 5, 1/8W, 39 OHM	00/00
ACTIVE	T50001	-.--	0003-0000-000	***** FOR REFERENCE ONLY *****	00/00
ACTIVE	T50002	-.--	0002-0000-000	*** REF DESIG NOT USED ***	00/00
ACTIVE	TP50001	-.--	2200-2010-400	CONN,M SMB,PC MTG,STR,.453LG	00/00
ACTIVE	TP50002	-.--	2200-2010-400	CONN,M SMB,PC MTG,STR,.453LG	00/00
ACTIVE	TP50003	-.--	2200-2010-400	CONN,M SMB,PC MTG,STR,.453LG	00/00
ACTIVE	TP50004	-.--	2200-2010-400	CONN,M SMB,PC MTG,STR,.453LG	00/00
ACTIVE	TP50005	-.--	2200-2010-400	CONN,M SMB,PC MTG,STR,.453LG	00/00
ACTIVE	TP50006	-.--	2200-2010-400	CONN,M SMB,PC MTG,STR,.453LG	00/00
ACTIVE	TP50007	-.--	2200-2010-400	CONN,M SMB,PC MTG,STR,.453LG	00/00
ACTIVE	TP50008	-.--	2200-2010-400	CONN,M SMB,PC MTG,STR,.453LG	00/00
ACTIVE	TP50009	-.--	0002-0000-000	*** REF DESIG NOT USED ***	00/00
ACTIVE	TP50010	7.00	2114-0000-007	POST,GANG,PCB,.025SQ,.443LG *	00/00
ACTIVE	TP50011	-.--	2114-0000-007	POST,GANG,PCB,.025SQ,.443LG *	00/00
ACTIVE	TP50012	-.--	2114-0000-007	POST,GANG,PCB,.025SQ,.443LG *	00/00

LI,283,2.MDATAB01 IFR SYSTEMS, INC.
MON, JAN 4, 1993, 12:46 PM

BILL OF MATERIAL LISTED BY REFERENCE DESIGNATOR
AS OF ALL DATES

ASSEMBLY PART NO.: 7010-4932-800
DESCRIPTION: PC BD ASSY-DISCR BD NO.1
ITEM MASTER REV: G ECO NO: 14073
REV OF THIS BOM: DATE OF LAST ECO: 03/05/92

STATUS	REFERENCE DESIGNATOR	QUANTITY PER ASSY	PART NUMBER	DESCRIPTION	EFFEC
ACTIVE	TP50013	-.--	2114-0000-007	POST,GANG,PCB,.025SQ,.443LG *	00/00
ACTIVE	TP50014	-.--	2114-0000-007	POST,GANG,PCB,.025SQ,.443LG *	00/00
ACTIVE	TP50015	-.--	2114-0000-007	POST,GANG,PCB,.025SQ,.443LG *	00/00
ACTIVE	TP50016	-.--	2114-0000-007	POST,GANG,PCB,.025SQ,.443LG *	00/00
ACTIVE	TP50017	-.--	0002-0000-000	*** REF DESIG NOT USED ***	00/00
ACTIVE	TP50018	-.--	2200-2010-400	CONN,M SMB,PC MTG,STR,.453LG	00/00
ACTIVE	TP50019	-.--	0002-0000-000	*** REF DESIG NOT USED ***	00/00
ACTIVE	TP50020	-.--	2200-2010-400	CONN,M SMB,PC MTG,STR,.453LG	00/00
ACTIVE	U50001	1.00	3132-0000-004	IC,74S04,HEX INVERTER	00/00
ACTIVE	U50002	1.00	3132-0000-001	IC,74S00,QUAD 2-INPUT NAND	00/00
ACTIVE	U50003	1.00	3131-0000-044	IC,74LS00,QUAD 2-INPUT NAND	00/00
ACTIVE	U50004	1.00	3131-0000-038	IC,74LS74A,DUAL D FLIP-FLOP	00/00
ACTIVE	U50005	1.00	3211-3161-000	IC,74LS161,SYNC 4-BIT BIN CTR	00/00
ACTIVE	U50006	-.--	0002-0000-000	*** REF DESIG NOT USED ***	00/00
ACTIVE	U50007	1.00	3221-0001-000	IC,353,DUAL JFET OP AMP	00/00
ACTIVE	U50008	2.00	3214-4098-100	IC,4098B,DUAL MULTIVIBRATOR	00/00
ACTIVE	U50009	1.00	3133-0000-004	IC,4027B,DUAL JK MS FLIP-FLOP	00/00
ACTIVE	U50010	5.00	3133-0000-024	IC,3130,BIMOS OP AMP,PLAST DIP	00/00
ACTIVE	U50011	1.00	3133-0000-001	IC,4001B,QUAD 2-INPUT NOR	00/00
ACTIVE	U50012	2.00	3133-0000-007	IC,4066B,QUAD BILATERAL SWITCH	00/00
ACTIVE	U50013	-.--	3133-0000-024	IC,3130,BIMOS OP AMP,PLAST DIP	00/00
ACTIVE	U50014	-.--	3214-4098-100	IC,4098B,DUAL MULTIVIBRATOR	00/00

LI,283,2.MDATAB01 IFR SYSTEMS, INC.
MON, JAN 4, 1993, 12:46 PM

BILL OF MATERIAL LISTED BY REFERENCE DESIGNATOR
AS OF ALL DATES

ASSEMBLY PART NO.: 7010-4932-800
DESCRIPTION: PC BD ASSY-DISCR BD NO.1
ITEM MASTER REV: G ECO NO: 14073
REV OF THIS BOM: DATE OF LAST ECO: 03/05/92

STATUS	REFERENCE DESIGNATOR	QUANTITY PER ASSY	PART NUMBER	DESCRIPTION	EFFEC
ACTIVE	U50015	-.--	3133-0000-007	IC,4066B,QUAD BILATERAL SWITCH	00/00
ACTIVE	U50016	-.--	3133-0000-024	IC,3130,BIMOS OP AMP,PLAST DIP	00/00
ACTIVE	U50017	-.--	3133-0000-024	IC,3130,BIMOS OP AMP,PLAST DIP	00/00
ACTIVE	U50018	1.00	3133-0000-011	IC,4011B,QUAD 2-INPUT NAND	00/00
ACTIVE	U50019	-.--	3133-0000-024	IC,3130,BIMOS OP AMP,PLAST DIP	00/00
ACTIVE	U50020	3.00	5050-2501-100	IC,MSA-0335-22,IC AMP	00/00
ACTIVE	U50021	-.--	5050-2501-100	IC,MSA-0335-22,IC AMP	00/00
ACTIVE	U50022	-.--	5050-2501-100	IC,MSA-0335-22,IC AMP	00/00
ACTIVE	W50001	1.00	6042-4986-500	COAX .086 SR 1.25 LG	00/00
ACTIVE	Z50001	-.--	0003-0000-000	***** FOR REFERENCE ONLY *****	00/00
ACTIVE	Z50002	-.--	0003-0000-000	***** FOR REFERENCE ONLY *****	00/00
ACTIVE	Z50005	-.--	0003-0000-000	***** FOR REFERENCE ONLY *****	00/00
ACTIVE	Z50006	-.--	0003-0000-000	***** FOR REFERENCE ONLY *****	00/00
ACTIVE	Z50007	-.--	0003-0000-000	***** FOR REFERENCE ONLY *****	00/00
ACTIVE	Z50008	-.--	0003-0000-000	***** FOR REFERENCE ONLY *****	00/00
ACTIVE	Z50010	-.--	0003-0000-000	***** FOR REFERENCE ONLY *****	00/00

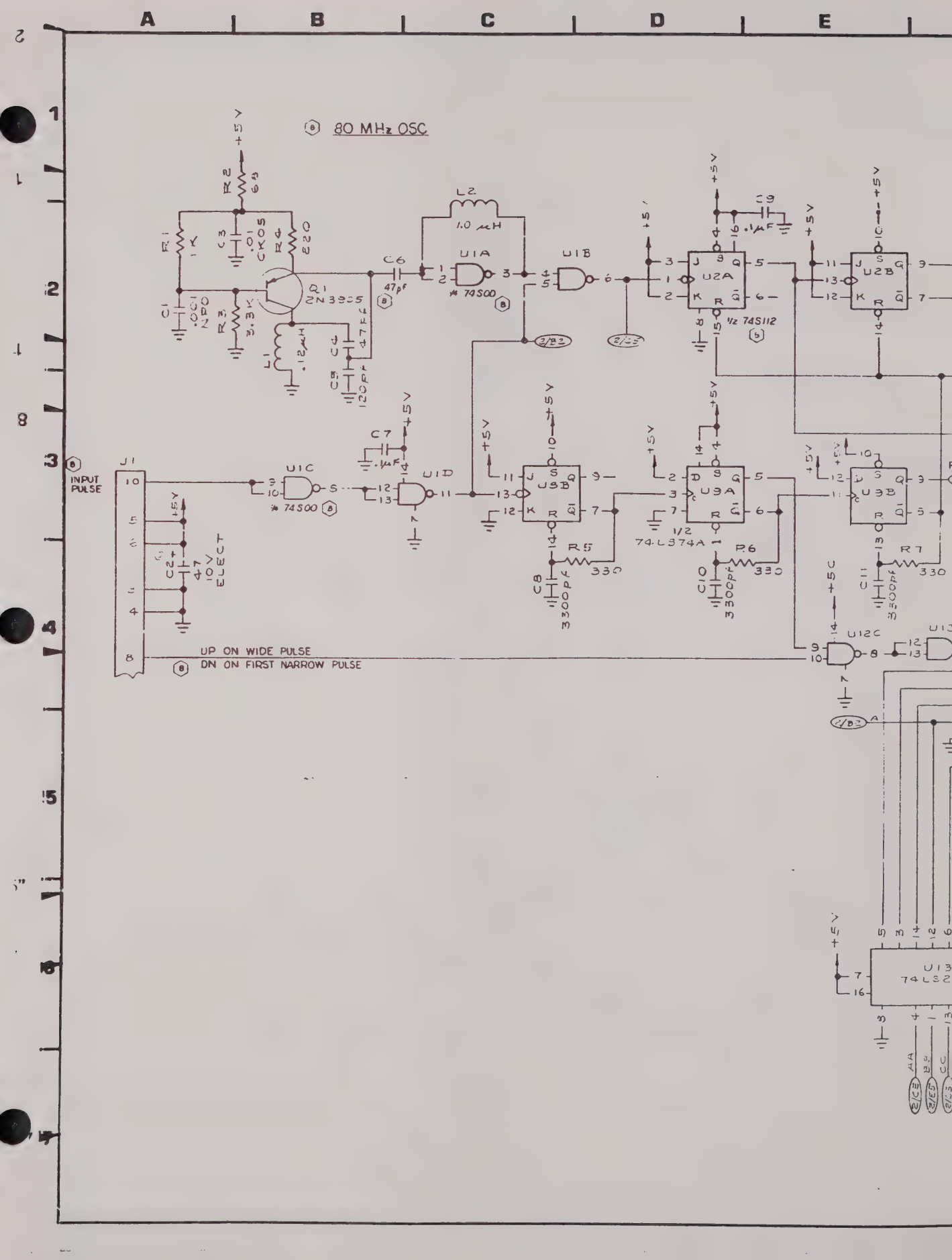
80 MHz OSC
+5V
R1 1K
R2 68
R3 3.3K
R4 220
C1 .001 NPO
C3 .01 CK05
Q1 2N3905
L1 .12μH
C4 47pF
C5 120pF
C6 47pF
L2 1.0 μH
U1A
U1B
* 74S00
C9 .1μF
U2A
U2B
1/2 74S112
C7 .1μF
U1C
U1D
J1
INPUT PULSE
C2 47 10V ELECT
U3B
U3A
1/2 74L374A
R5 330
R6 330
R7 330
C8 330pF
C10 330pF
C11 330pF
U12C
UP ON WIDE PULSE
DN ON FIRST NARROW PULSE
74L32

DATE	REV	CHANGE	APVD
	B	Revised per mark up	
	A	PRODUCTION RELEASE ECN 6790	VH

PULSE MEASUREMENT COUNTER (1)

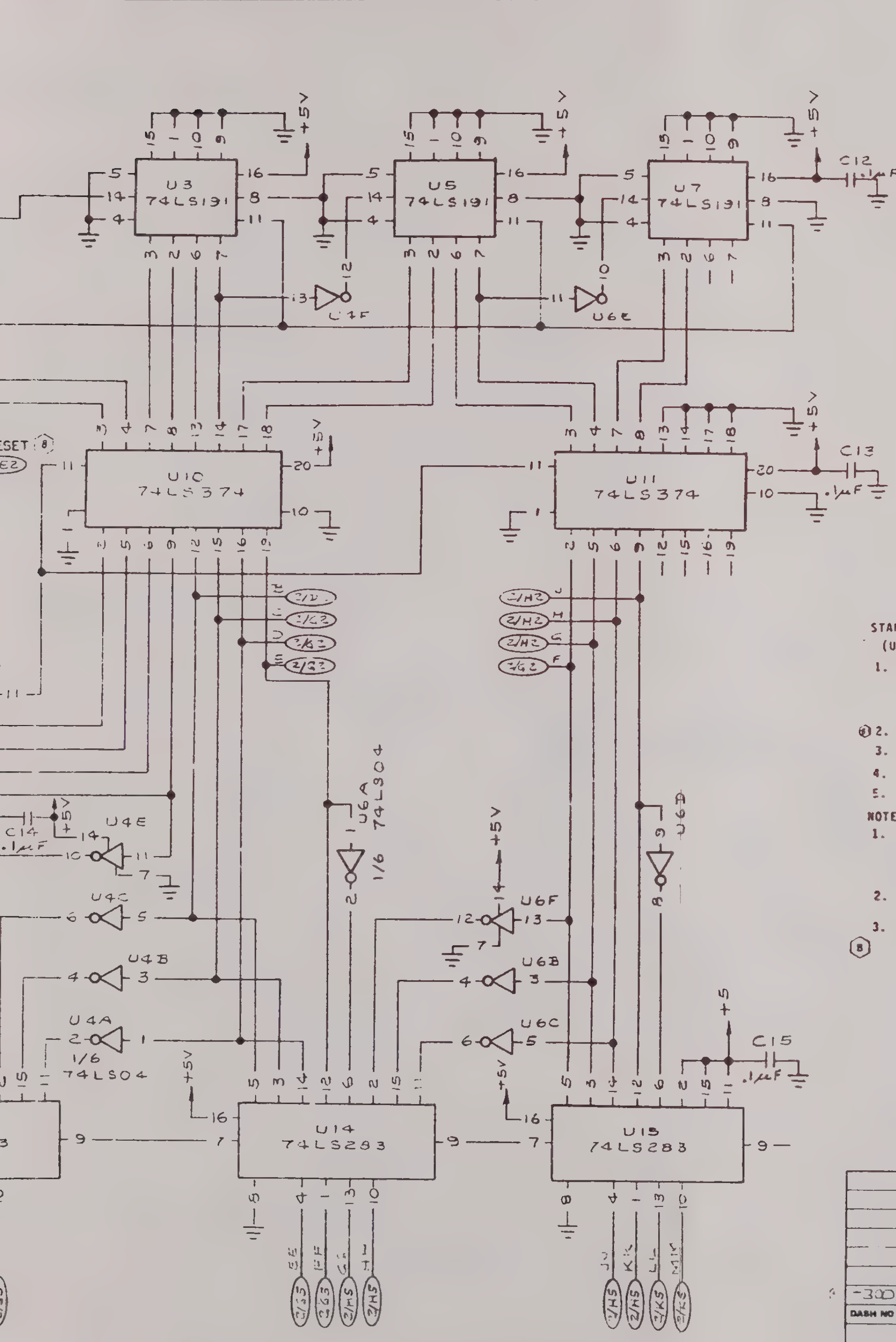

STANDARDS:
(UNLESS OTHERWISE NOTED)

1. ALL REFERENCE NUMBERS CARRY AN ASSIGNED DESIGNATOR SERIES. THIS SCHEMATIC CARRIES SERIES 35XXX (E.G. R1 IS R35001).
2. ALL RESISTORS ARE: 1/8w 5%
3. ALL RESISTANCES ARE EXPRESS IN OHMS.
4. ALL CAPACITANCES ARE EXPRESSED IN MICROFARADS.
5. ALL INDUCTANCES ARE EXPRESSED IN MICROHENRIES.

NOTES:

1. LAST REF DES USED:
   C21 Q1
   J1 R7
   L2 U28
2. REF DES NOT USED:
   U16
3. FUNCTIONS NOT USED:
   (8) U17D

DASH NO	REF DES SERIES	NEXT ASSY	MODEL
-300	35XXX	7010-4931-300	RD-301
APPLICATION			

UNLESS OTHERWISE SPECIFIED: ALL DIMENSIONS APPLY AFTER FINISH. TOLERANCES: DECIMALS, FRACTIONS, ANGLES. SURFACE FINISH. REMOVE ALL BURRS. DO NOT SCALE THIS DRAWING

MATERIAL

FINISH

-IFR INC- 10200 West York Street Wichita, Kansas 67215

TITLE: DISCRIMINATOR CIRCUIT SCHEMATIC BOARD NO. 2 (49-113)

DRAWN: Sward DATE 6-14-83
CHECKED
APPROVED: Bill Young DATE 12-3-84

SIZE D DWG. NO. 0000-4911-300 REV B

SCALE — CODE IDENT. 51190 WEIGHT — SHEET 1 OF 2

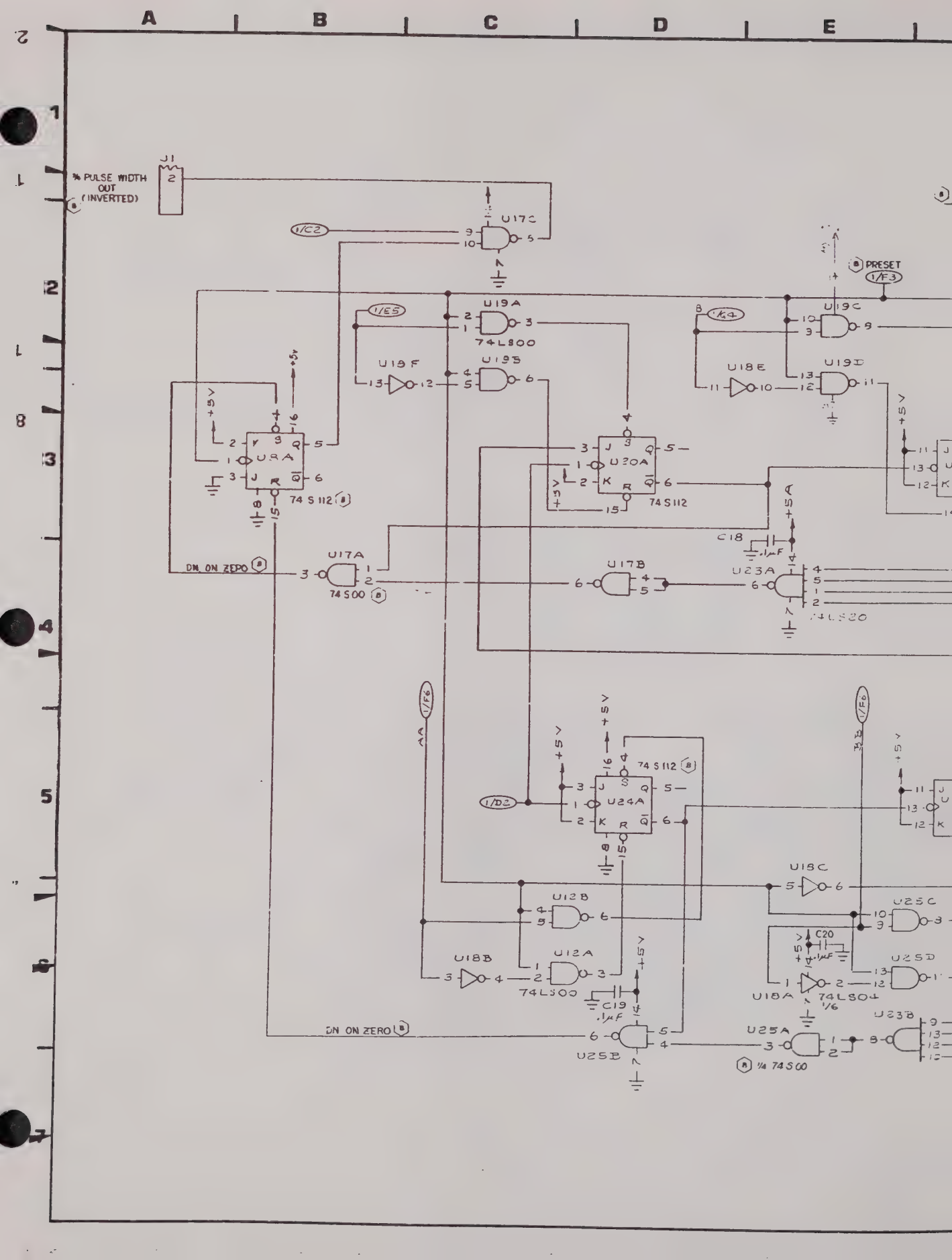

A
B
C
D
E
% PULSE WIDTH OUT (INVERTED)
J1
U17C
1/C2
PRESET
1/F3
U19A
74LS00
1/E5
U19C
1/K4
U19F
U19B
U18E
U19D
U8A
74 S 112
U20A
74 S 112
+5V
C18
.1µF
U17A
74 S 00
DN ON ZERO
U17B
U23A
74LS20
1/F6
AA
BB
74 S 112
U24A
1/D2
U18C
U12B
U25C
C20
.1µF
U18B
U12A
74LS00
U25D
U18A
74LS04
1/6
C19
.1µF
DN ON ZERO
U25B
U25A
U23B
1/4 74 S 00

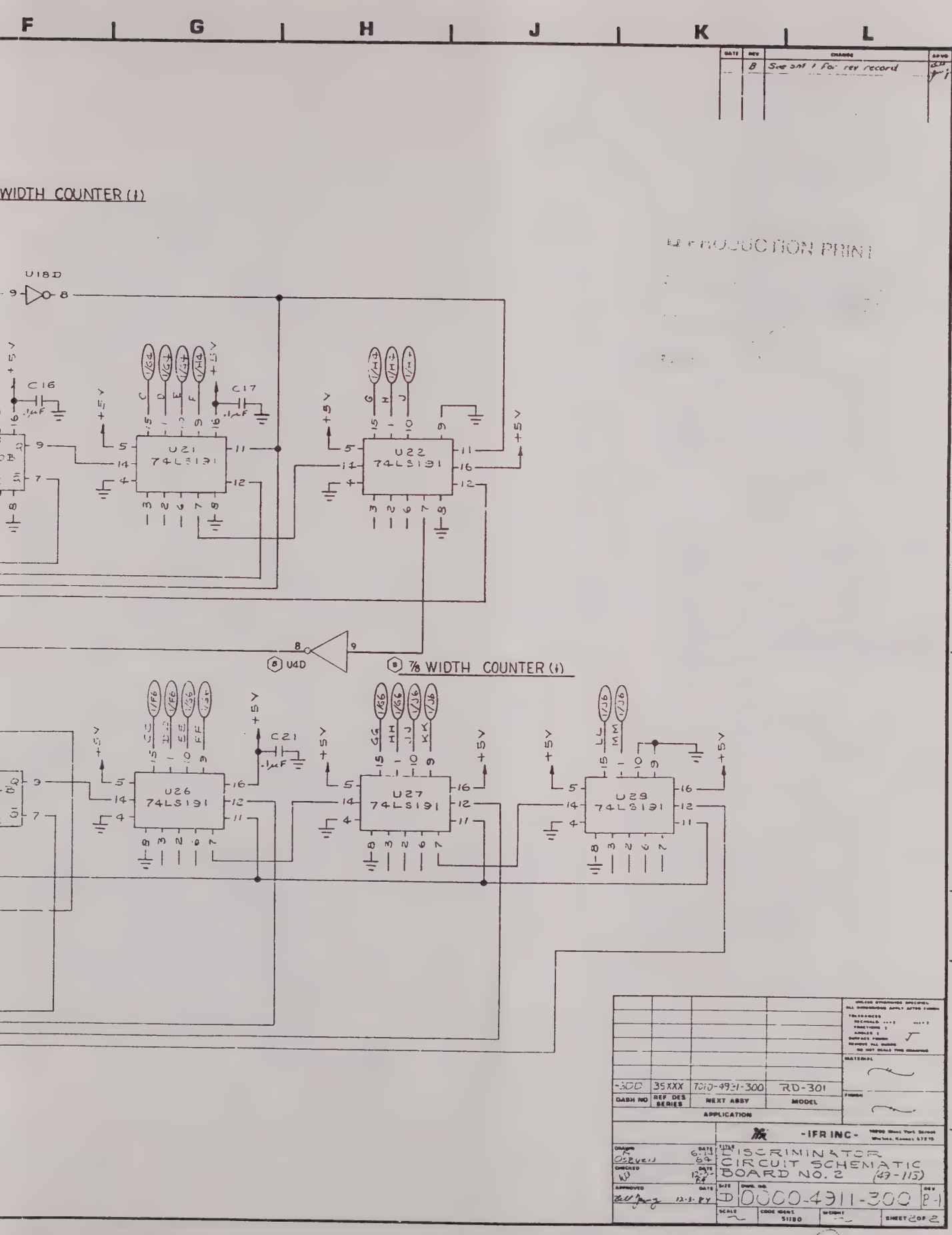
F
G
H
J
K
L
B
See sht 1 for rev record
WIDTH COUNTER (1)
PRODUCTION PRINT
U18D
C16
.1µF
C17
.1µF
U21
74LS191
U22
74LS191
U4D
7/8 WIDTH COUNTER (1)
C21
.1µF
U26
74LS191
U27
74LS191
U28
74LS191
+5V
-300
35XXX
7010-4931-300
RD-301
DASH NO
REF DES SERIES
NEXT ASSY
MODEL
APPLICATION
-IFR INC-
DISCRIMINATOR CIRCUIT SCHEMATIC BOARD NO. 2
(49-115)
D
0000-4911-300
B-1
SHEET 2 OF 2
11

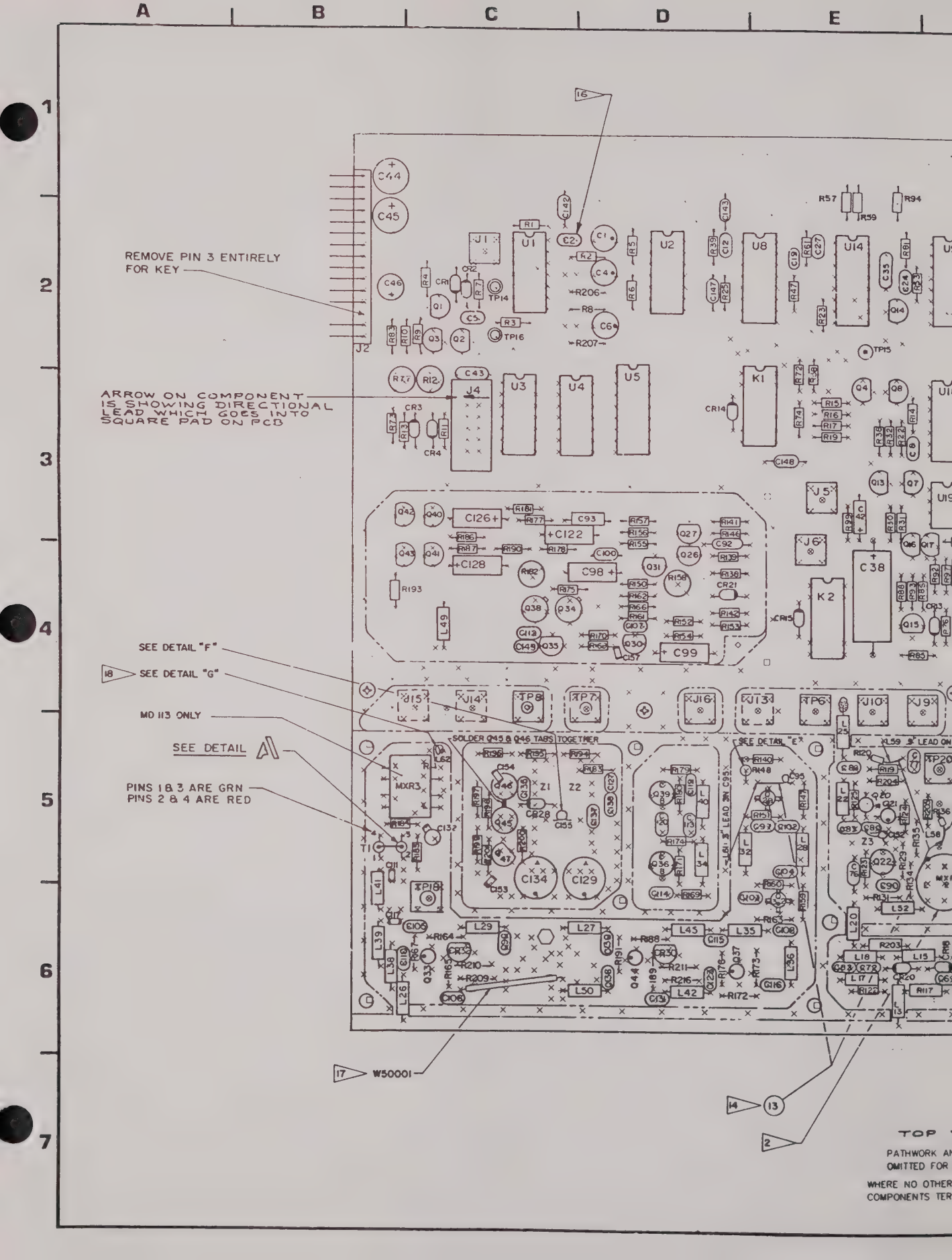
A
B
C
D
E
1
2
3
4
5
6
7
REMOVE PIN 3 ENTIRELY FOR KEY
ARROW ON COMPONENT IS SHOWING DIRECTIONAL LEAD WHICH GOES INTO SQUARE PAD ON PCB
SEE DETAIL "F"
18 SEE DETAIL "G"
MD 113 ONLY
SEE DETAIL A
PINS 1 & 3 ARE GRN
PINS 2 & 4 ARE RED
17 W50001
14
13
2
SOLDER Q45 & Q46 TABS TOGETHER
SEE DETAIL "E"
TOP
PATHWORK AN
OMITTED FOR
WHERE NO OTHER
COMPONENTS TER

DATE	REV	CHANGE		APVD
	A	PRODUCTION RELEASE ECN 8053		VLH
5-15 86	A-1	INC ECN 8521	JS	VLH
4-14 87	D	INC ECN 9238 & ADDENDUM	"CH/PS"	VLH
7-7 87	D-1	INC ECN 9972	JS	VLH
8-7 87	D-2	INC RC 10175	AO	VLH
7-3 88	E	INC RC 10161	"CH/PS"	VLH
7-11 88	E-1	INC ECN 11166	HV	BP
7-24 88	E-2	INC RC 11441	AO	BP
8-3 88	E-3	INC ECN 11474	AO	BP
8-9 88	E4	INC RC 11499	PL	BP
11-21 88	E5	IN RC 11871	PL	BP
4-7 90	E6	INC RC 11966	JR	BP
4-27 89	E7	INC RC 12365	AO	BP
4-10 90	E8	INC ECN 13230	AO	BP
4-16 90	E9	INC RC 13334	AO	BP
8-7 90	F	INC RC 13387	AO	BP
6-28 90	F-1	INC RC 13534	AO	BP
8-13 90	F-2	INC RC 13490	AO	BP
12-6 90	F-3	INC RC 13858	AO	BP
4-1 92	G	INC ECN 14073	AO	BP

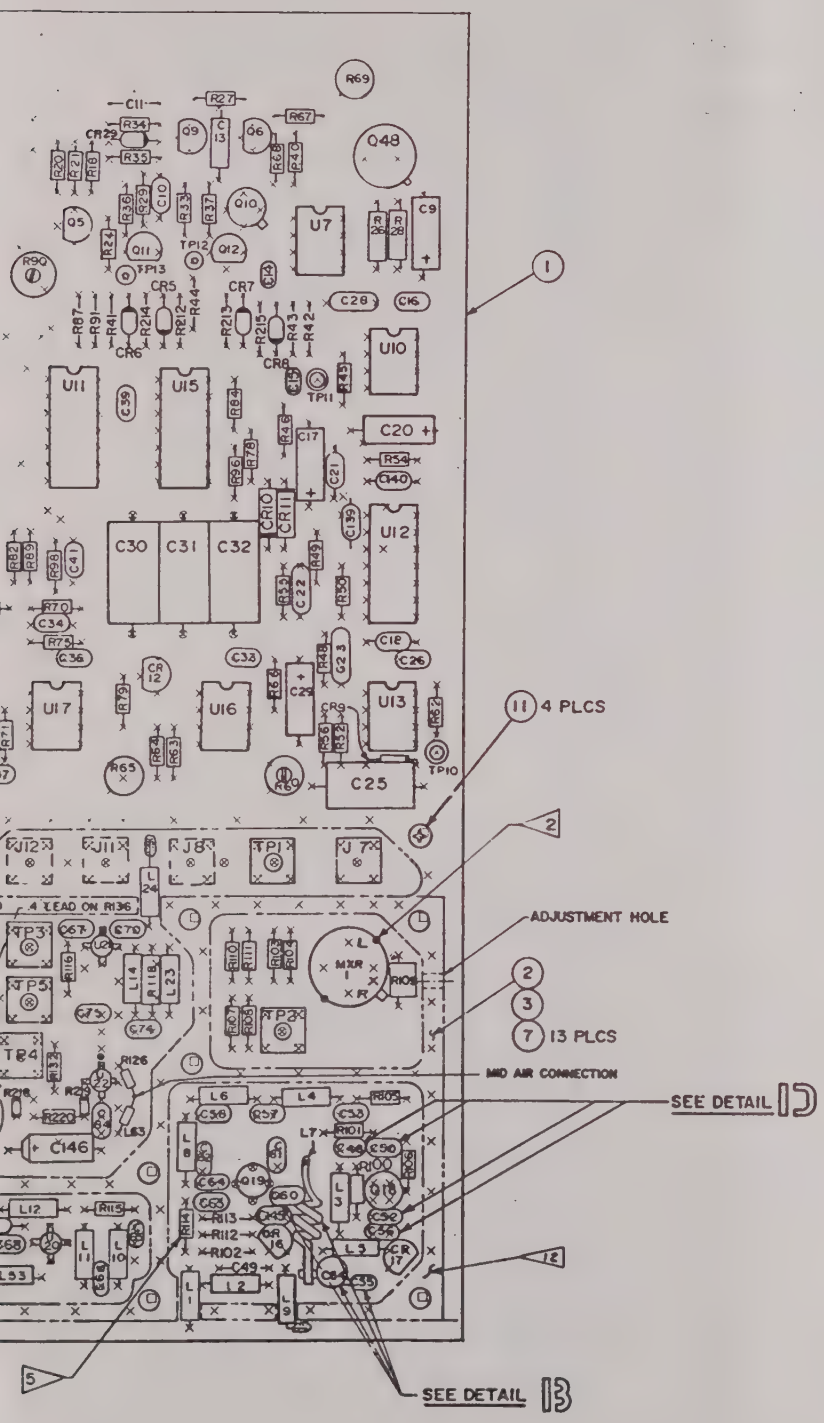

NOTES:

1. ALL REF Nº'S CARRY AN ASSIGNED DESIGNATOR SERIES. THIS DWG CARRIES SERIES 50XXX (e.g., R1 IS R50001).
2. MOUNT MIXER 1 AND 2 FLAT AGAINST P.C. BOARD. TAC SOLDER CAN TO GND PLANE. USED M2A ONLY.
3. REF SCHEMATIC DWG Nº IS 0000-4912-800
4. NOT USED.
5. R114 IS S.A.T. (SELECTED AT TEST) NOMINAL VALUE: 150 ohm, RANGE VALUE: 100-180 ohm.
6. LAST REF Nº'S USED: C157, CR32, J16, K2, L63, MXR3, Q48, R220, TP20, U22, T1
7. REF Nº'S NOT USED: C121, C85, C144, J3, L21, L47, Q23, Q24, Q25, R192, TP9, C141, TP17, C79, C81, C91, C124, C125, C133, L48, R51, R127, R128, R130, R137, R143, R202, T2, TP19, U6, C88, R121, Z3, Z4, Z11, C118, C94, C101, C136, L30, L56, R217, R145, CR31, Q28, R144, R149, R208, C73
8. LAST ITEM NUM USED: 15
9. ITEM NUM NOT USED: 5, 8, 9
10. L7 IS CONSTRUCTED FROM AN 18GA WIRE 1.8" LG. C60 IS ATTACHED .2" FROM GND PLANE. (SEE DETAIL PG2 FOR CONSTRUCTION INFO)
11. NOT USED
12. REMOVE OXIDE AND EXCESS SOLDER UNDER ENCLOSURE.
13. NOT USED
14.

	LEAD ON	SLEEVING
L61:	C95	.4" IF POSSIBLE, .3" MIN
L59:	R120	.5"
L58:	R136	.4"

16. C155 LEADS TO SOLDER TO TRACE IN LINE WITH ADJACENT PLATED THRU HOLES
17. .086 SEMI RIGID, 1.25" LG SOLDERED TO GND AT ENDS
18. L62 IS FORMED BY 26GA, 1.1" LG, 2 TURNS. KEEP IT CLEAR OF THE COVER BLOCK
19. NO CONNECTION TO PC BOARD
15. NOT USED
16. C2 IS SAT
    NOMINAL: 27pf
    RANGE: 15-33pf

SEE SHEET 3 FOR DETAILS

EW

GROUND PLANE ARE
ARITY.

RMINATION IS PROVIDED.
ATE ON GROUND PLANE.

-IFR INC-

J. SIGLER

P.C. BD ASS'Y
DISCRIMINATOR BD Nº 1
RD301 (49-328)

D | 7010-4932-800 | G

SCALE 2:1 | SHEET 1 OF 3

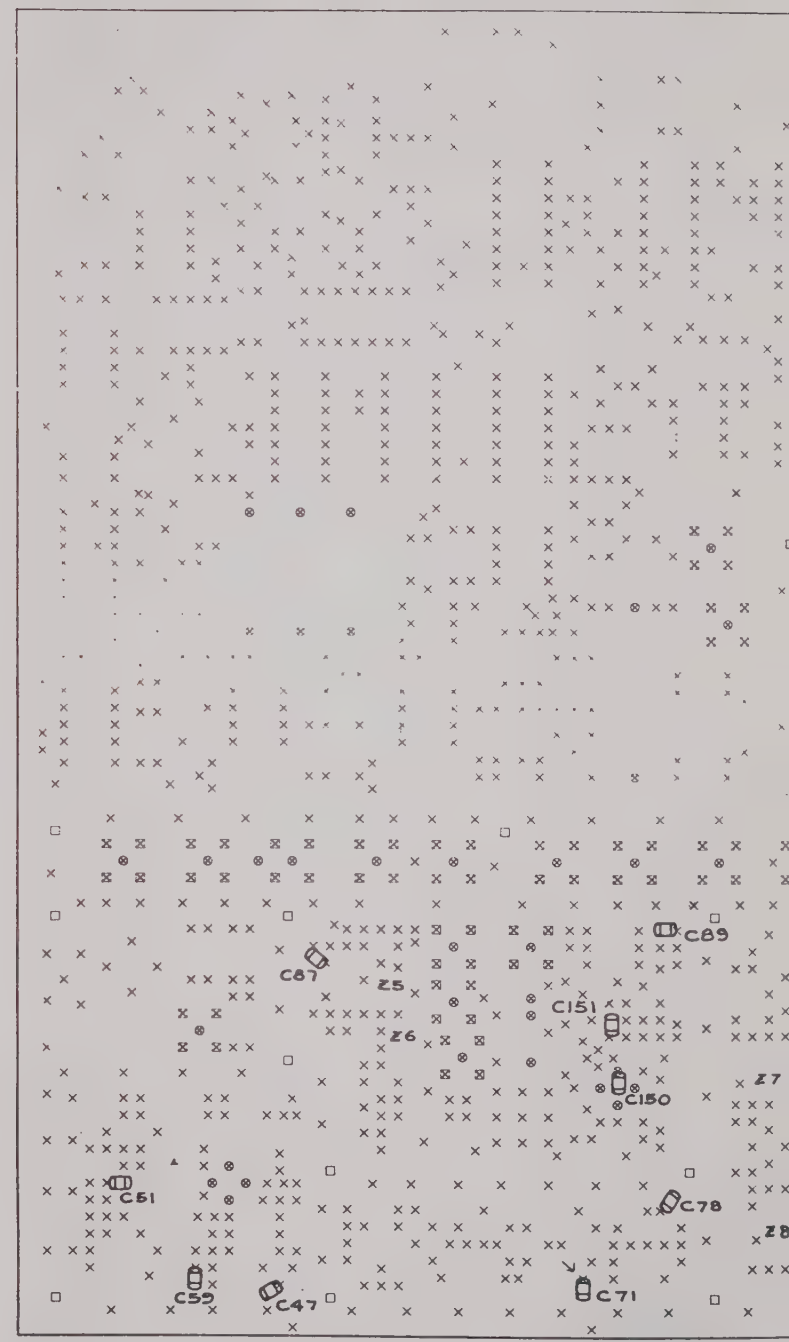

BOTTOM
SCALE

PATHWORK AND GROU
OMITTED FOR CLARITY
WHERE NO OTHER TERMIN
COMPONENTS TERMINATE

F G H I J K

DATE	REV	CHANGE	APVD
		SEE SHEET 1	

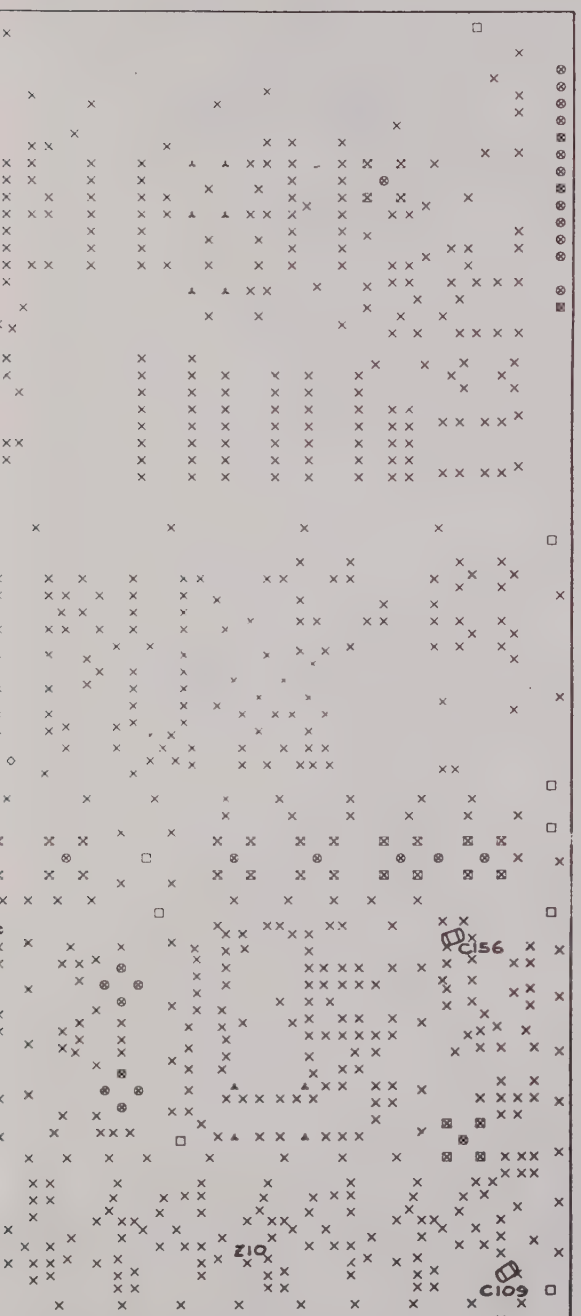

EW
:1

PLANE ARE

ON IS PROVIDED.
GROUND PLANE.

TOLERANCES, UNLESS OTHERWISE SPECIFIED

IFR SYSTEMS INC

DRAWN	AOSBURN	4-7-92
CHECKED		
APPROVED		

TITLE: PC BD ASSY DISCRIMINATOR BD NO. 1

SIZE: D | DWG NO: 7010-4932-800 | REV: G

SCALE: 2:1 | SHEET 2 OF 3

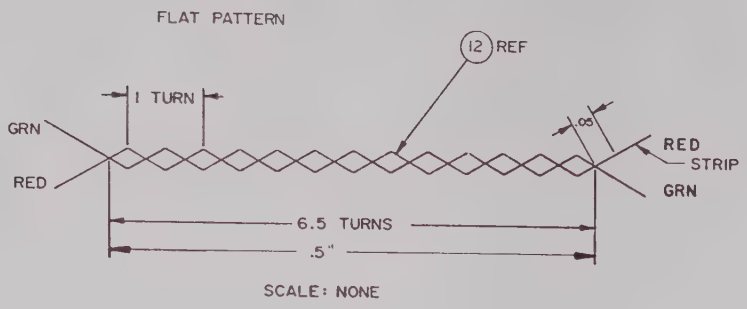

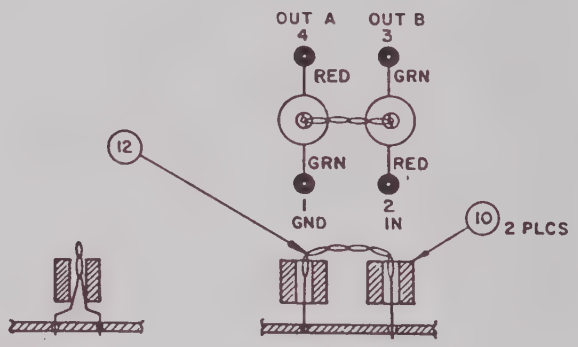

DETAIL A
STRIP EACH LEAD .05 FROM TWIST
(NO SCALE)

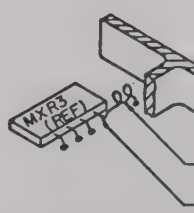

DETAIL G

DATE	REV	CHANGE	APVD
		SEE SHEET ONE	

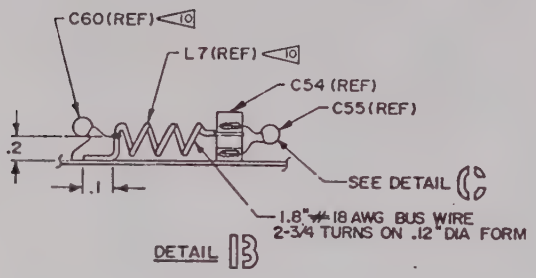

DETAIL 13

NO SCALE

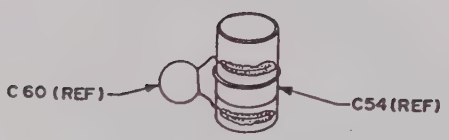

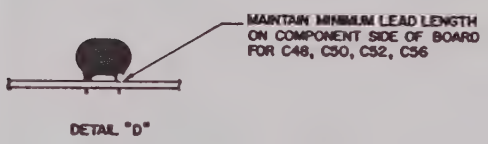

DETAIL "D"

DETAIL

NO SCALE

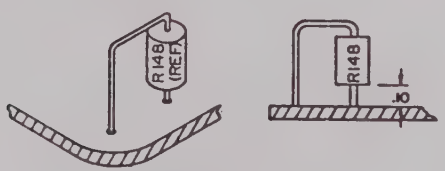

DETAIL E

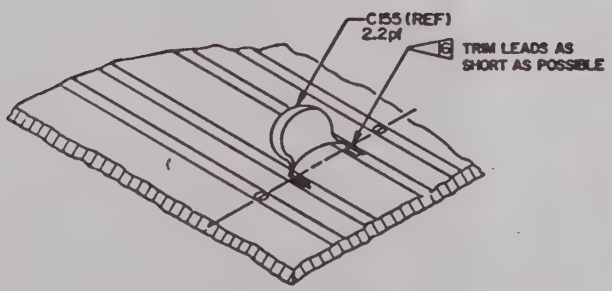

DETAIL F

-COVER BLOCK

I.D., 1.1" LONG, 2 TURNS

5 MID AIR CONNECTION

	RD-301	
	IFR SYSTEMS INC	
J. SIGLER	PC BD ASSY DISCRIMINATOR BD No 1	
	D 7010-4932-800	G1
	NOTED	SHEET 3 OF 3

A B C D E

1 2 3 4 5 6 7

5 R

7 PPI

8 C2

DATE	REV	CHANGE	APVD
	B	PROD. REL'D ADVANCED BOARD TO "B" REV. PER FIRST BUILD ECN 8053	VLH
5-15 86	B-1	INC ECN 8521 JS	VLH
4-14 87	D	INC ECN 4236 & ADDENDUM "CHIPS"	VLH
7-6 87	D-1	INC ECN 9972 JS	VLH
10-7 88	E	INC RC 10161 "CHIPS"	VLH
7-8 88	E-1	INC ECN 11166 JR	BP
4-2 90	E-2	INC ECN 13230 WOW	BP
7-28 91	E-3	INC ECN 13534 AO	BP
3-16 92	F	WAS NEVER RELEASED	
3-16 92	G	INC ECN 14073	BP

IS S.A.T. (SELECTED AT TEST)
NOMINAL VALUE: 150 ohm
RANGE VALUE: 100-180 ohm

D INDUCTOR SPECS:
..... .013 × .75 LG
..... .013 × .75 LG
..... .013 × .73 LG
..... .013 × .67 LG
..... .013 × 1.00 LG
..... .013 × .73 LG
..... .013 × .78 LG
..... .015 × .310 LG
..... .015 × .215 LG
&C7 ARE INSTALLED IN FINAL
ST, AS REQUIRED.
ANGE VALUE: C2 - NOM 27pf
RANGE 15-33pf
C3 RANGE 0-56pf
C7 RANGE 0-82pf

STANDARDS:
(UNLESS OTHERWISE NOTED)

1. ALL REF. Nº'S CARRY AN ASSIGNED DESIGNATOR SERIES. THIS SCHEMATIC CARRIES SERIES 50XXX, (e.g., R1 IS R50001).
2. ALL RESISTORS ARE 1/8 W, 5%
3. ALL RESISTANCE IS EXPRESSED IN OHMS.
4. ALL CAPACITANCE IS EXPRESSED IN MICROFARADS.
5. ALL INDUCTANCE IS EXPRESSED IN MICRO-HENRYS.

NOTES:

1. LAST REF. DES. USED:

C157	MXR3	E1
CR32	Q48	T1
J16	TP20	
K2	R220	
L63	U22	

2.

3. REF DES NOT USED:

J3	T2	C125	R130	R202	L57	C94	L56	Q28
TP9	L47	C144	C133	R51	Z3	C101		R144
TP17	L48	C85	C91	R143	Z4	C136	R137	R149
L21	R192	R135	Q23	TP19	Z11	C3	R217	R208
C79	U6	R127	Q24	C88	C121	C7	R145	C73
C81	C124	R128	Q25	R121	C118	L30	CR31	

4. FUNCTIONS NOT USED:

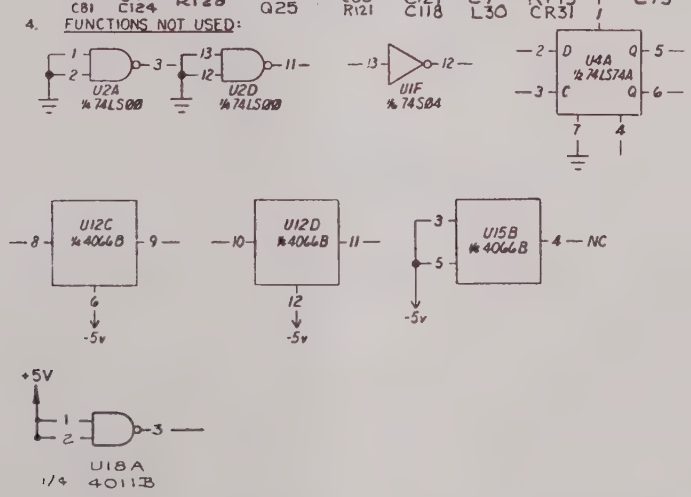

DRAWN L.A. Meis, Jr. DATE 12 NOV 85	-IFR INC-	
CHECKED [signature] DATE 12-7-86	TITLE SCHEMATIC DISCRIMINATOR Bd Nº 1 RD301 (49-128)	
APPROVED [signature] DATE 5/5/86	SIZE D DWG. NO. 0000-4912-800	REV G
	SCALE — CODE IDENT 51190 WEIGHT —	SHEET 1 OF 5

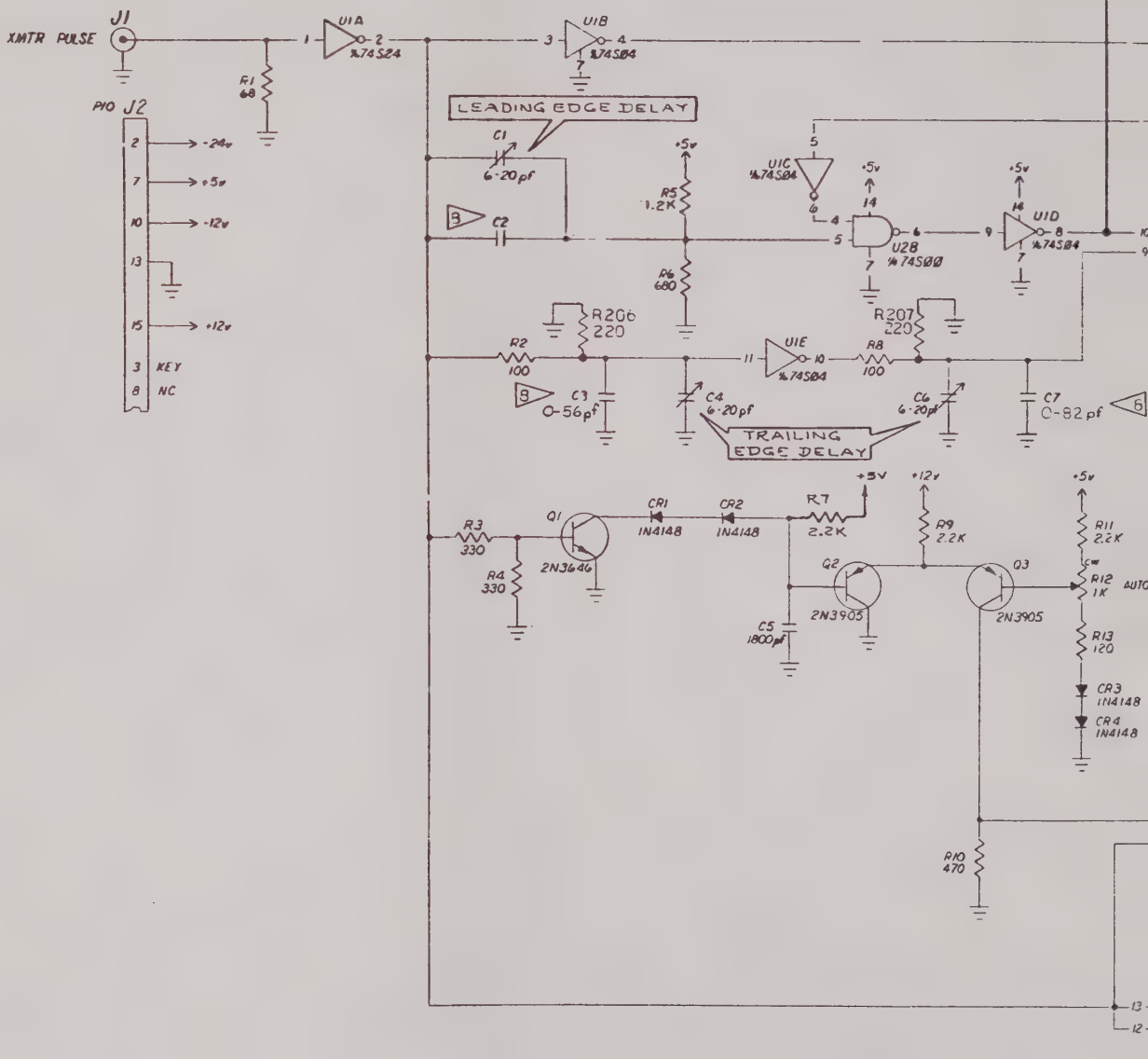
XMTR PULSE
J1
U1A
U1B
R1
68
P10 J2
-24v
+5v
-12v
+12v
KEY
NC
LEADING EDGE DELAY
C1
6-20pf
C2
R5
1.2K
R6
680
U1C
U28
U1D
R206
220
R207
220
R2
100
U1E
R8
100
C3
0-56pf
C4
6-20pf
C6
6-20pf
C7
0-82pf
TRAILING
EDGE DELAY
Q1
2N3646
CR1
IN4148
CR2
IN4148
R7
2.2K
R3
330
R4
330
R9
2.2K
Q2
2N3905
Q3
2N3905
R11
2.2K
R12
1K
AUTO
R13
120
CR3
IN4148
CR4
IN4148
C5
1800pf
R10
470

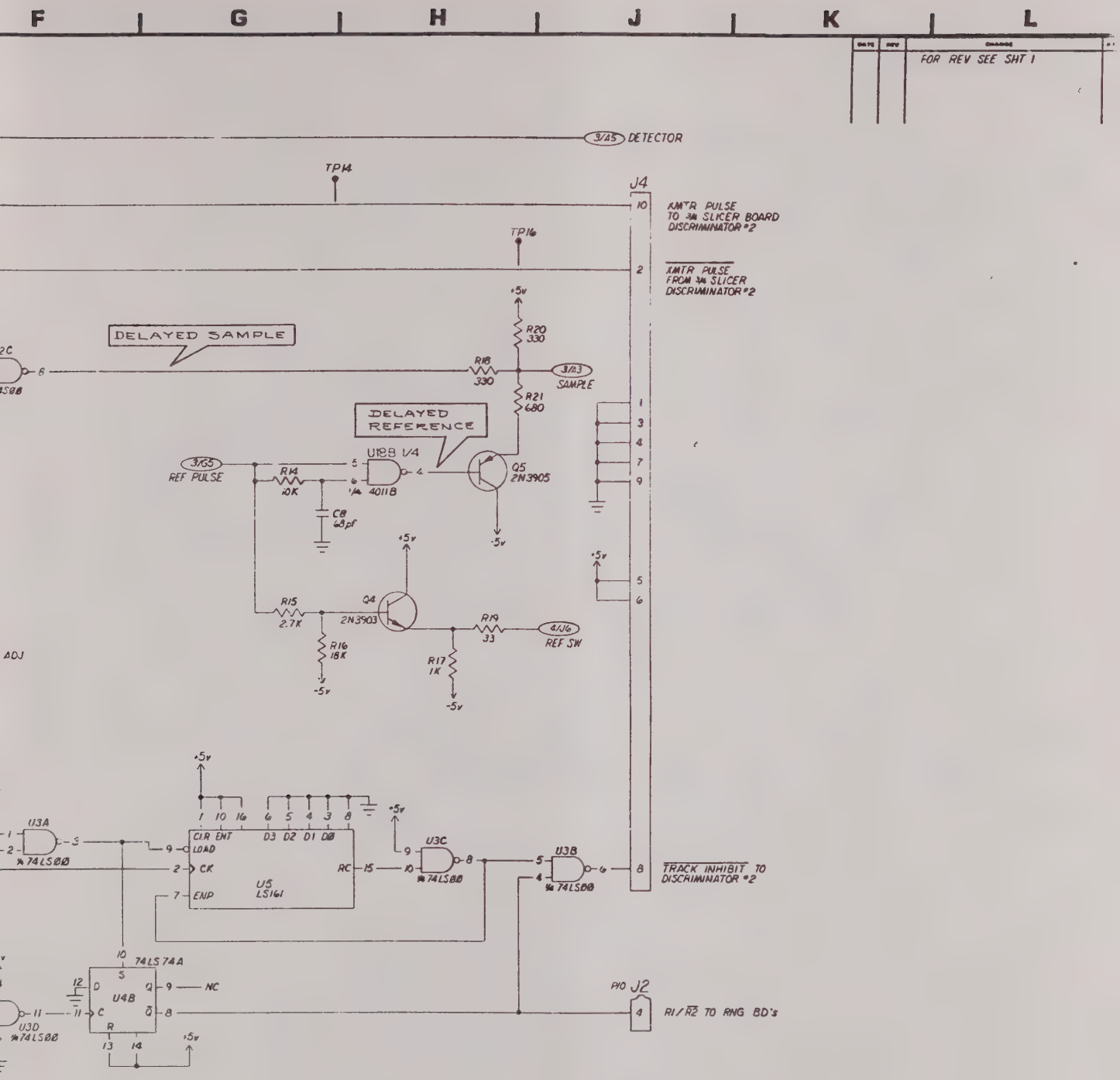

SEE SHEET 1 FOR NOTES & STANDARDS

-IFR INC-

DRAWN L. A. Meis, Jr. DATE 05 NOV 85	TITLE SCHEMATIC DISCRIMINATOR Bd Nº 1 RD-301 (49-128)
CHECKED DATE 12-2-85	
APPROVED DATE	SIZE D DWG. NO. 0000-4912-800
	SCALE — CODE IDENT 51190 WEIGHT — SHEET 2 OF

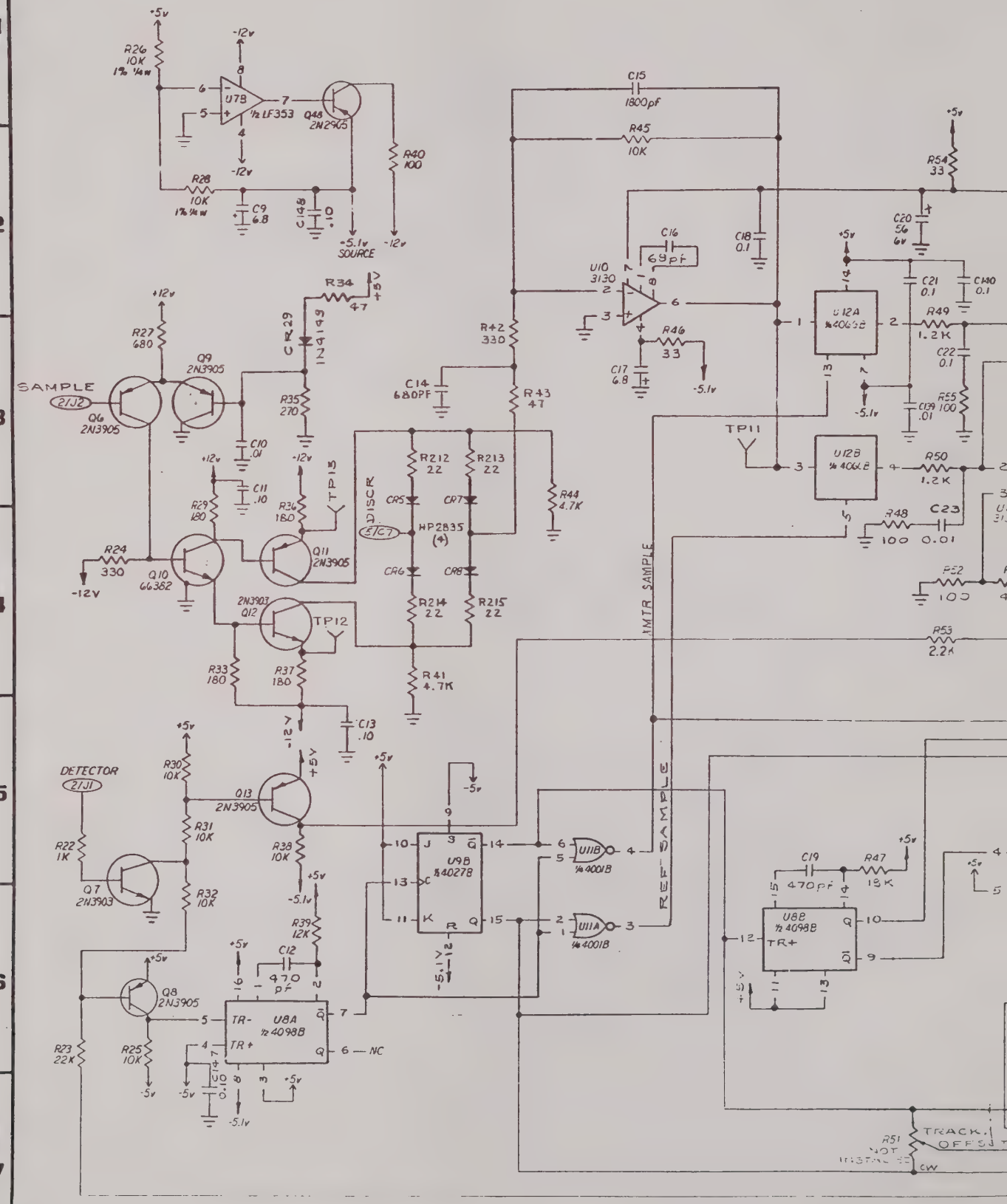
A
B
C
D
E
1
2
3
4
5
6
7
+5v
-12v
R26 10K 1% 1/4W
U7B
1/2 LF353
Q48 2N2905
R40 100
R28 10K 1% 1/4W
C9 6.8
C148 .10
-5.1v SOURCE
-12v
R34 47
+5v
CR29 1N4149
+12v
R27 680
Q9 2N3905
SAMPLE
21J2
Q6 2N3905
R35 270
C10 .01
+12v
C11 .10
-12v
TP13
R29 180
R36 180
R24 330
Q10 66382
Q11 2N3905
-12v
2N3903 Q12
TP12
R33 180
R37 180
-12v
C13 .10
DETECTOR
21J1
+5v
R30 10K
Q13 2N3905
R31 10K
R22 1K
Q7 2N3903
R32 10K
R38 10K
+5v
-5.1v
R39 12K
+5v
C12 470 pf
Q8 2N3905
R23 22K
R25 10K
-5v
TR-
TR+
U8A 1/2 4098B
Q
NC
C14 .10
-5.1v
C15 1800pf
R45 10K
C16 68pf
C18 0.1
U10 3130
R46 33
C17 6.8
-5.1v
R42 330
C14 680PF
R43 47
R212 22
R213 22
CR5
CR7
DISCR
5TC7
HP2835 (4)
CR6
CR8
R214 22
R215 22
R44 4.7K
R41 4.7K
-5v
U9B 1/2 4027B
J
K
C
R
Q
U11B 1/4 4001B
U11A 1/4 4001B
-5.1v
REF SAMPLE
AMTR SAMPLE
+5v
R54 33
C20 56 6v
C21 0.1
C140 0.1
U12A 1/4 4066B
R49 1.2K
C22 0.1
C139 .01
R55 100
-5.1v
TP11
U12B 1/4 4066B
R50 1.2K
R48 100
C23 0.01
R52 100
R53 2.2K
C19 470pf
R47 15K
U8B 1/2 4098B
TR+
Q
Q1
TRACK. OFFSET
R51 NOT INSTALLED
CW

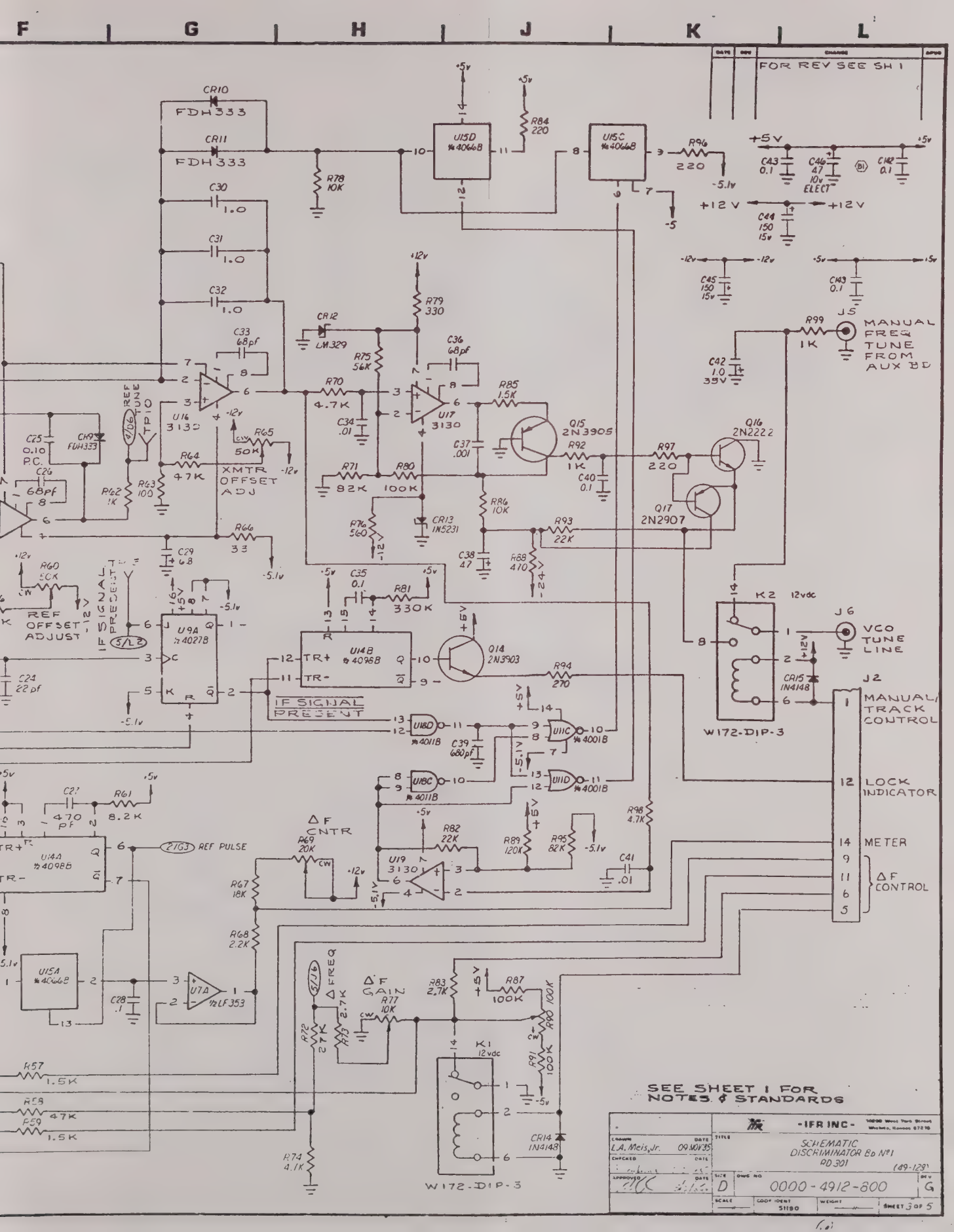
F
G
H
J
K
L
FOR REV SEE SH 1
CR10 FDH333
CR11 FDH333
U15D ½4066B
U15C ½4066B
R84 220
R78 10K
R96 220
-5.1v
-5
+5V
C43 0.1
C46 47 10v ELECT
C142 0.1
+12 V
C44 150 15v
-12v
C45 150 15v
C143 0.1
C30 1.0
C31 1.0
C32 1.0
C33 68pf
CR12 LM329
R79 330
C36 68pf
R75 56K
R70 4.7K
C34 .01
U16 3130
U17 3130
R85 1.5K
Q15 2N3905
R92 1K
C40 0.1
R97 220
Q16 2N2222
Q17 2N2907
R71 82K
R80 100K
C37 .001
R86 10K
R76 560
CR13 IN5231
C38 47
R68 410
R93 22K
R99 1K
J5 MANUAL FREQ TUNE FROM AUX BD
C42 1.0 35V
REF TUNE TP10
R65 50K CW
XMTR OFFSET ADJ
R64 47K
R62 1K
R63 100
C25 0.10 P.C.
CR9 FDH333
C26 68pf
R66 33
C29 68
R60 50K CW
REF OFFSET ADJUST
IF SIGNAL PRESENT TP3
U9A ½4027B
C24 22pf
C35 0.1
R81 330K
U14B ½4096B
Q14 2N3903
R94 270
IF SIGNAL PRESENT
U18D ½4011B
U11C ½4001B
C39 680pf
U18C ½4011B
U11D ½4001B
K2 12vdc
J6 VCO TUNE LINE
CR15 IN4148
W172-DIP-3
J2
MANUAL TRACK CONTROL
LOCK INDICATOR
METER
ΔF CONTROL
C27 470 pf
R61 8.2K
U14A ½4098B
21G3 REF PULSE
ΔF CNTR
R69 20K CW
R67 18K
R68 2.2K
R82 22K
U19 3130
R89 120K
R95 82K
C41 .01
R98 4.7K
U15A ½4066B
U7A ½LF353
C28 .1
21J6 Δ FREQ
ΔF GAIN
R77 10K CW
R72 2.7K
R73 2.7K
R83 2.7K
R87 100K
R90 100K
R91 100K
K1 12vdc
CR14 IN4148
R74 4.1K
R57 1.5K
R58 47K
R59 1.5K
SEE SHEET 1 FOR NOTES & STANDARDS
-IFR INC-
SCHEMATIC DISCRIMINATOR Bd Nº1 PD 301
(149-128)
L.A. Meis, Jr. 09 NOV 35
0000-4912-800
SHEET 3 OF 5

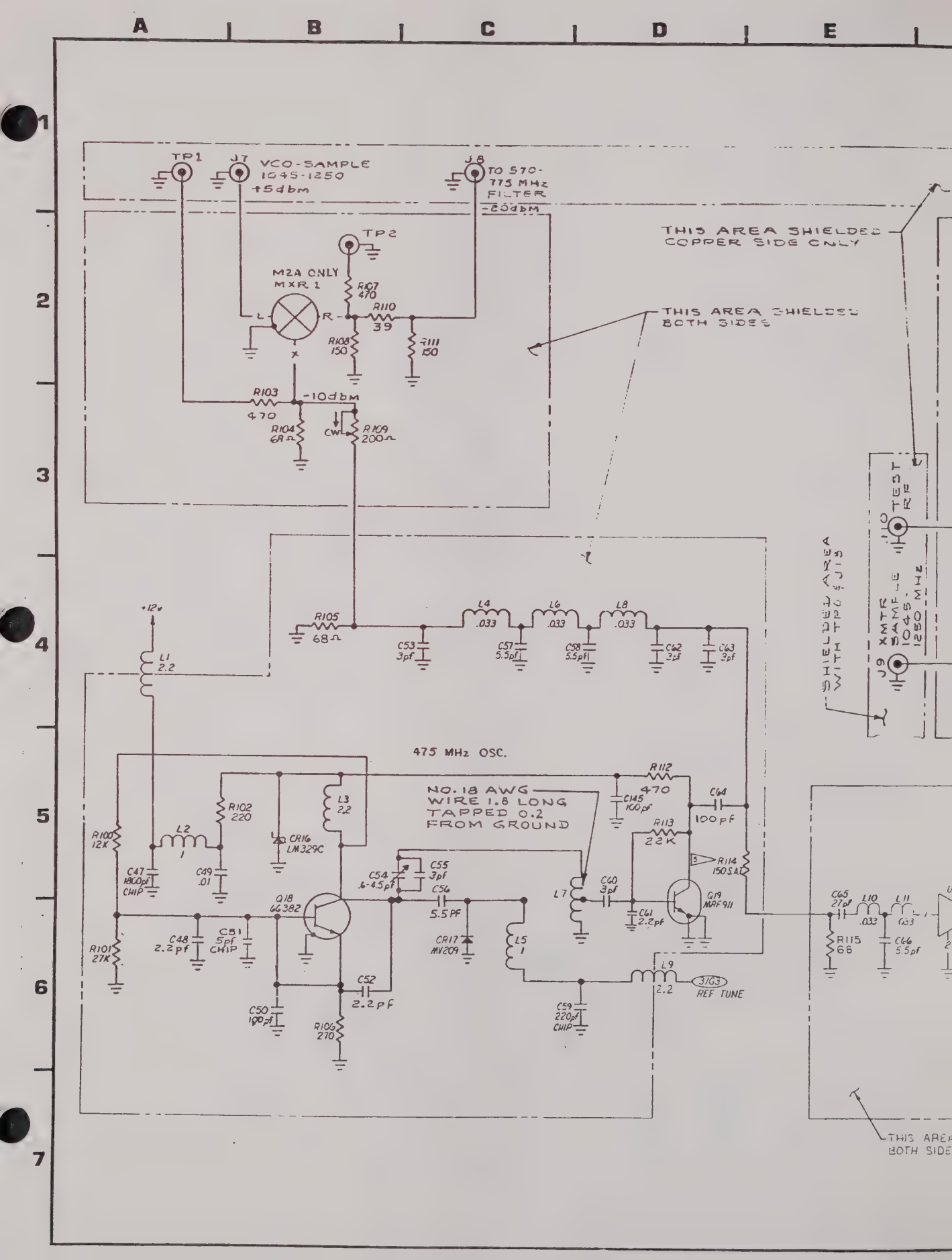
A
B
C
D
E
1
2
3
4
5
6
7
TP1
J7
VCO-SAMPLE
1045-1250
+5dbm
J8
TO 570-
775 MHz
FILTER
-20dbm
TP2
M2A ONLY
MXR 1
R107
470
R110
39
R108
150
R111
150
L
R
X
R103
470
-10dbm
R104
68Ω
CW
R109
200Ω
THIS AREA SHIELDED
COPPER SIDE ONLY
THIS AREA SHIELDED
BOTH SIDES
J9 XMTR
SAMPLE
1045-
1250 MHz
LO TEST
RF
SHIELDED AREA
WITH TUNING SLUG
+12v
L1
2.2
R105
68Ω
L4
.033
L6
.033
L8
.033
C53
3pf
C57
5.5pf
C58
5.5pf
C62
3pf
C63
9pf
475 MHz OSC.
NO. 18 AWG
WIRE 1.8 LONG
TAPPED 0.2
FROM GROUND
R112
470
C145
100pf
C64
100pf
R113
22K
R114
150 SAT
R100
12K
R102
220
L2
1
L3
2.2
CR16
LM329C
C47
1800pf
CHIP
C49
.01
C54
.6-4.5pf
C55
3pf
C56
5.5PF
L7
C60
3pf
C61
2.2pf
Q19
MRF911
Q18
GG382
R101
27K
C48
2.2pf
C51
5pf
CHIP
CR17
MV209
L5
1
L9
2.2
3/G3
REF TUNE
C52
2.2pf
C50
100pf
R106
270
C59
220pf
CHIP
C65
27pf
L10
.033
L11
G33
R115
68
C66
5.5pf
THIS AREA
BOTH SIDE

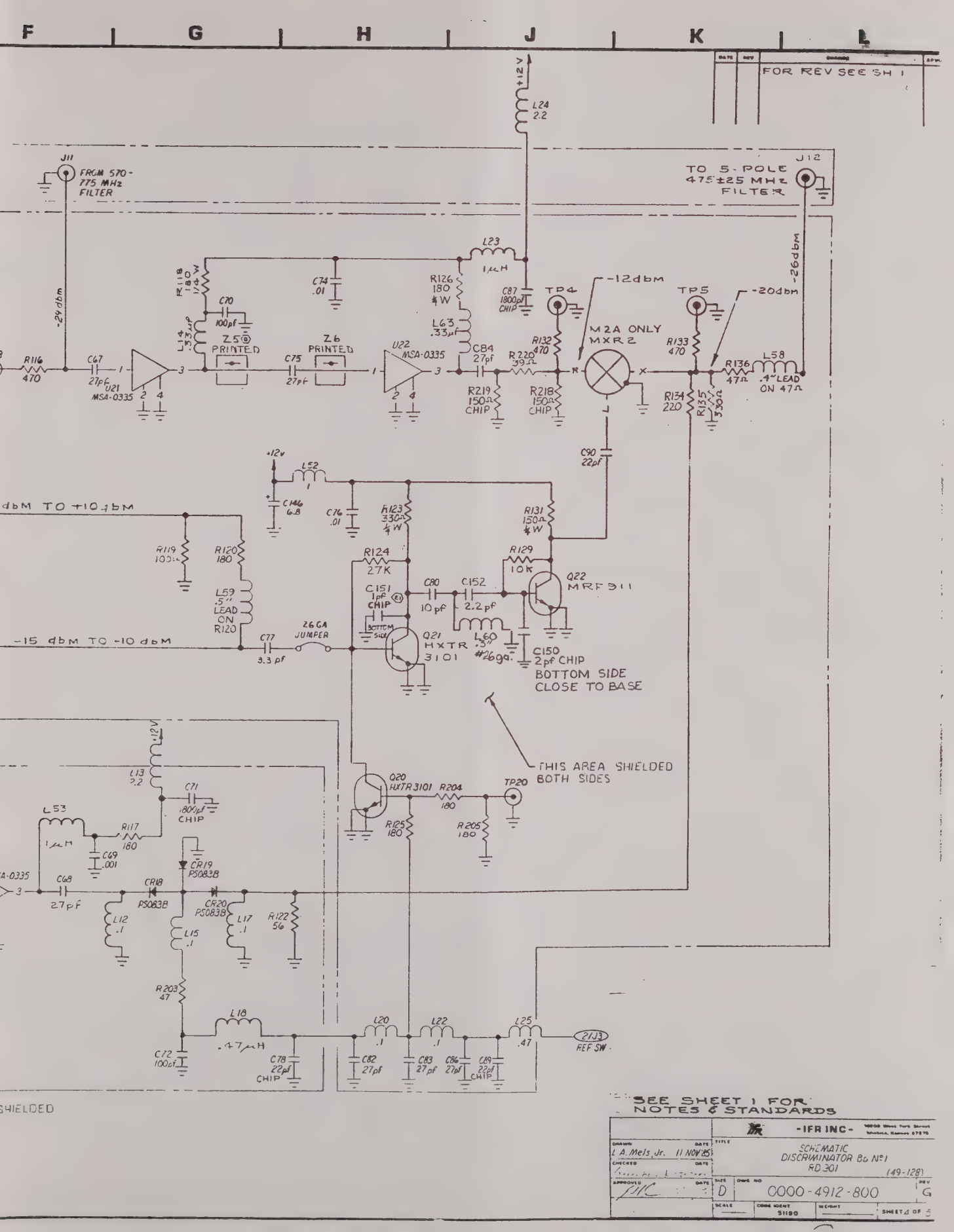
F
G
H
J
K
L
FOR REV SEE SH 1
+12V
L24
2.2
J11
FROM 570-775 MHz FILTER
J12
TO 5-POLE 475±25 MHz FILTER
-26dbm
-29dbm
L23
1μH
R118
180
1/4 W
C74
.01
R126
180
1/4 W
C87
1800pf
CHIP
TP4
-12dbm
TP5
-20dbm
C70
100pf
L14
.33μF
Z5
PRINTED
Z6
PRINTED
U22
MSA-0335
L63
.33μF
C84
27pf
R220
39Ω
R132
470
M2A ONLY
MXR2
R133
470
R136
47Ω
L58
.4" LEAD ON 47Ω
R116
470
C67
27pf
U21
MSA-0335
C75
27pf
R219
150Ω
CHIP
R218
150Ω
CHIP
R134
220
R135
330Ω
C90
22pf
+12v
L52
1
C146
6.8
C76
.01
R123
330Ω
1/4 W
R131
150Ω
1/4 W
dbM TO +10dbM
R119
100Ω
R120
180
R124
27K
R129
10K
Q22
MRF911
C151
1pf
CHIP
C80
10pf
C152
2.2pf
L59
.5" LEAD ON R120
BOTTOM SIDE
Q21
HXTR
3101
L60
.3"
#26ga.
C150
2pf CHIP
BOTTOM SIDE
CLOSE TO BASE
-15 dbM TO -10 dbM
C77
3.3 pf
26GA JUMPER
THIS AREA SHIELDED BOTH SIDES
+12V
L13
2.2
C71
1800pf
CHIP
Q20
HXTR3101
R204
180
TP20
L53
1μH
R117
180
R125
180
R205
180
C69
.001
CR19
PS083B
A-0335
C68
27pf
CR18
PS083B
CR20
PS083B
L12
.1
L15
.1
L17
.1
R122
56
R203
47
L18
.47μH
L20
.1
L22
.1
L25
.47
21J3
REF SW
C72
100pf
C78
22pf
CHIP
C82
27pf
C83
27pf
C86
27pf
C89
22pf
CHIP
SHIELDED
SEE SHEET 1 FOR NOTES & STANDARDS
-IFR INC-
DRAWN
L. A. Mels, Jr.
11 NOV '85
TITLE
SCHEMATIC
DISCRIMINATOR Bd No 1
RD 301
(49-128)
SIZE
D
DWG NO
0000-4912-800
REV
G
SCALE
CODE IDENT
51190
WEIGHT
SHEET 4 OF 5

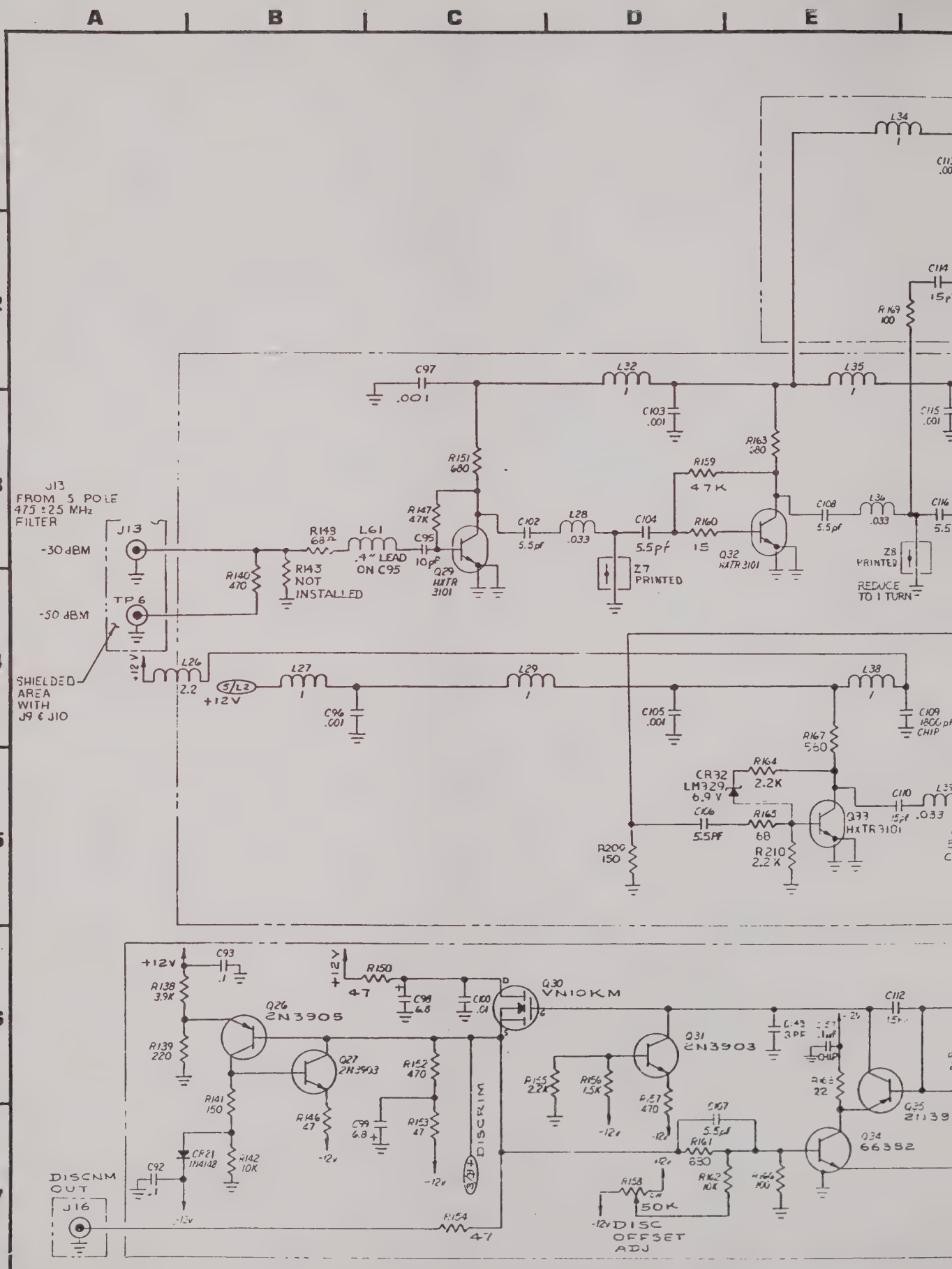

A
B
C
D
E
1
2
3
4
5
6
7
J13
FROM 5 POLE
475 ±25 MHz
FILTER
J13
-30 dBM
TP 6
-50 dBM
SHIELDED
AREA
WITH
J9 & J10
R140
470
R143
NOT
INSTALLED
R148
68Ω
L61
.4" LEAD
ON C95
C95
10pf
R147
47K
Q29
HXTR
3101
R151
680
C97
.001
L32
1
C103
.001
C102
5.5pf
L28
.033
C104
5.5pf
Z7
PRINTED
R159
47K
R160
15
Q32
HXTR 3101
R163
680
L35
1
C108
5.5pf
L36
.033
C116
5.5
Z8
PRINTED
REDUCE
TO 1 TURN
L34
1
C114
15p
R169
100
C115
.001
L26
2.2
+12V
L27
1
C96
.001
L29
1
C105
.001
L38
1
C109
1800pf
CHIP
R167
560
R164
2.2K
CR32
LM329
6.9 V
C106
5.5PF
R165
68
R210
2.2K
R209
150
Q33
HXTR 3101
C110
15pf
.033
+12V
C93
.1
R138
3.9K
R139
220
Q26
2N3905
Q27
2N3903
R141
150
R142
10K
CR21
1N4148
C92
.1
R146
47
R152
470
R153
47
C99
6.8
R150
47
C98
6.8
C100
.01
Q30
VN10KM
DISCRIM
R154
47
DISCNM
OUT
J16
Q31
2N3903
R155
2.2K
R156
1.5K
R157
470
C107
5.5pf
R161
630
R162
10K
R158
50K
DISC
OFFSET
ADJ
C112
Q34
66392
Q35
2N39

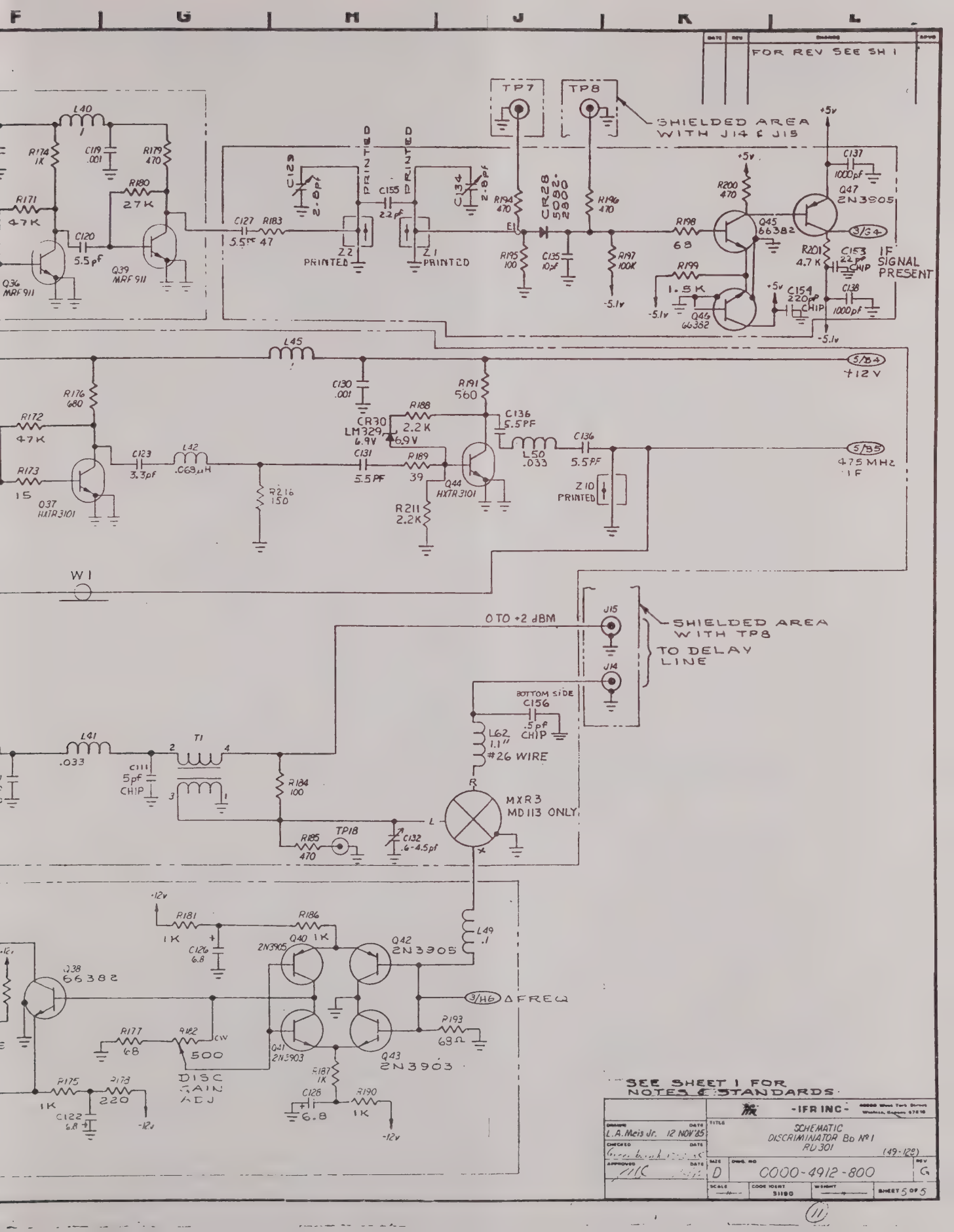
FOR REV SEE SH 1
TP7
TP8
SHIELDED AREA WITH J14 & J15
+5v
L40
R174 1K
C119 .001
R179 470
R180 27K
R171 47K
C120 5.5pf
Q36 MRF 911
Q39 MRF 911
C127 5.5PF
R183 47
C129 2-8pf
C155 22pf
C134 2-8pf
Z2 PRINTED
Z1 PRINTED
R194 470
CR28 5082-2800
R196 470
R195 100
C135 10pf
R197 100K
-5.1v
R200 470
Q47 2N3905
C137 1000pf
R198 68
Q45 66382
3/J4
R201 4.7K
C153 22pf CHIP
IF SIGNAL PRESENT
R199 1.5K
Q46 66382
C154 220pf CHIP
C138 1000pf
L45
5/B4
+12V
R176 680
R172 47K
R173 15
Q37 HXTR3101
C123 3.3pf
L42 .068μH
C130 .001
CR30 LM329 6.9V
R188 2.2K
R191 560
C131 5.5PF
R189 39
Q44 HXTR3101
R211 2.2K
R216 150
C136 5.5PF
L50 .033
C136 5.5PF
Z10 PRINTED
5/B5
47.5 MHz IF
W1
0 TO +2 dBM
J15
J14
SHIELDED AREA WITH TP8
TO DELAY LINE
BOTTOM SIDE
C156 .5pf CHIP
L62 1.1" #26 WIRE
L41 .033
T1
C111 5pf CHIP
R184 100
MXR3 MD113 ONLY
R185 470
TP18
C132 .6-4.5pf
-12v
R181 1K
C126 6.8
R186 1K
Q40 2N3905
Q42 2N3905
L49 .1
Q38 66382
3/H6
ΔFREQ
R177 68
R182 500 CW
DISC GAIN ADJ
Q41 2N3903
Q43 2N3903
R193 69Ω
R175 1K
R173 220
C122 6.8
R187 1K
C128 6.8
R190 1K
SEE SHEET 1 FOR NOTES & STANDARDS
-IFR INC-
L.A. Meis Jr. 12 NOV 85
SCHEMATIC DISCRIMINATOR Bd Nº1 RU 301
(49-128)
D
0000-4912-800
G
SHEET 5 OF 5

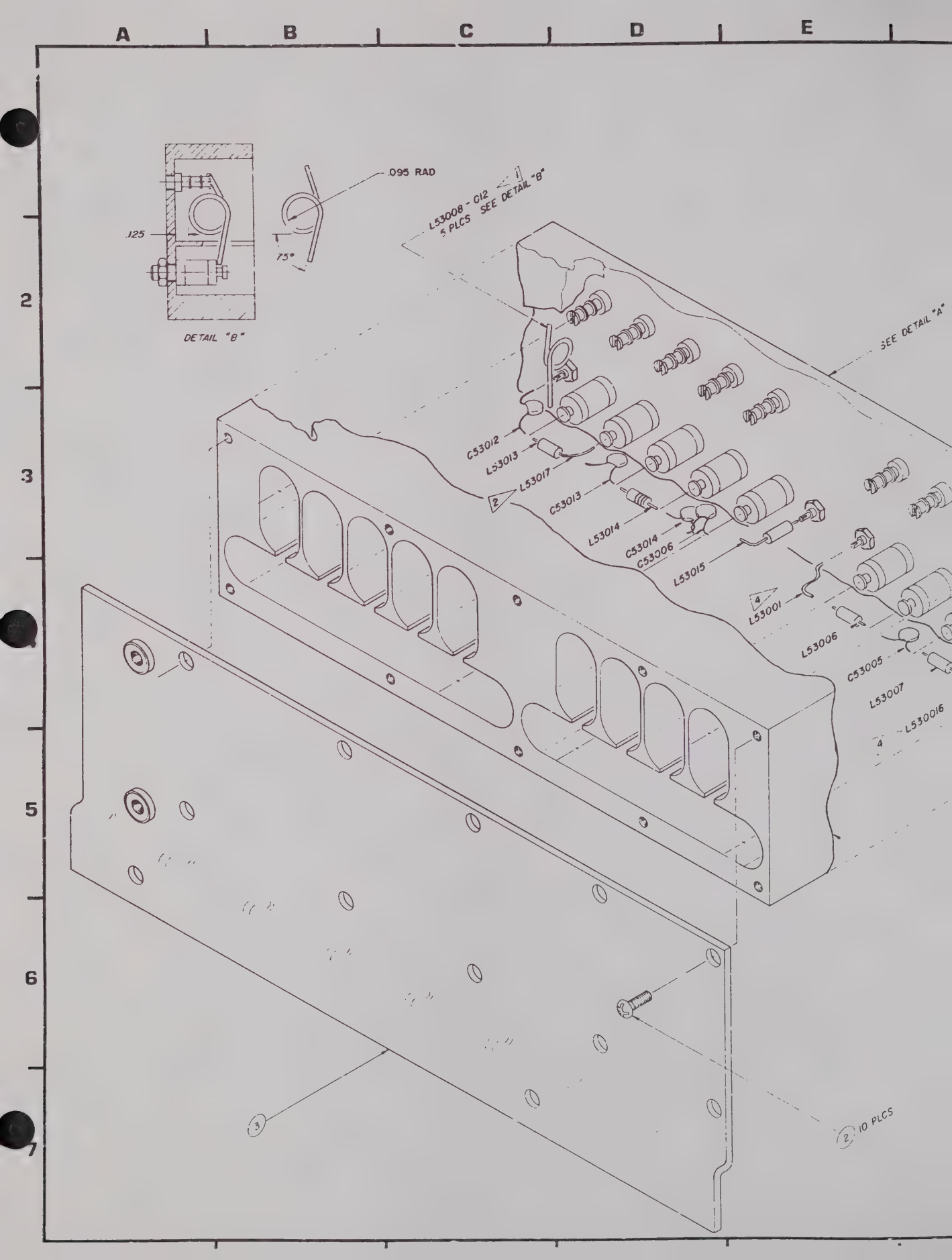
A
B
C
D
E
2
3
5
6
7
.095 RAD
.125
75°
DETAIL "B"
L53008 - 012
5 PLCS SEE DETAIL "B"
SEE DETAIL "A"
C53012
L53013
L53017
2
C53013
L53014
C53014
C53006
L53015
4
L53001
L53006
C53005
L53007
4
L530016
3
2 10 PLCS

DATE	REV	CHANGE	APVD
7-13-88	A	PRODUCTION RELEASE PER ECN 11166	BV
9-1-88	B	INC ECN 11166A	JC
6-2-89	C	INC ECN 12435	JC

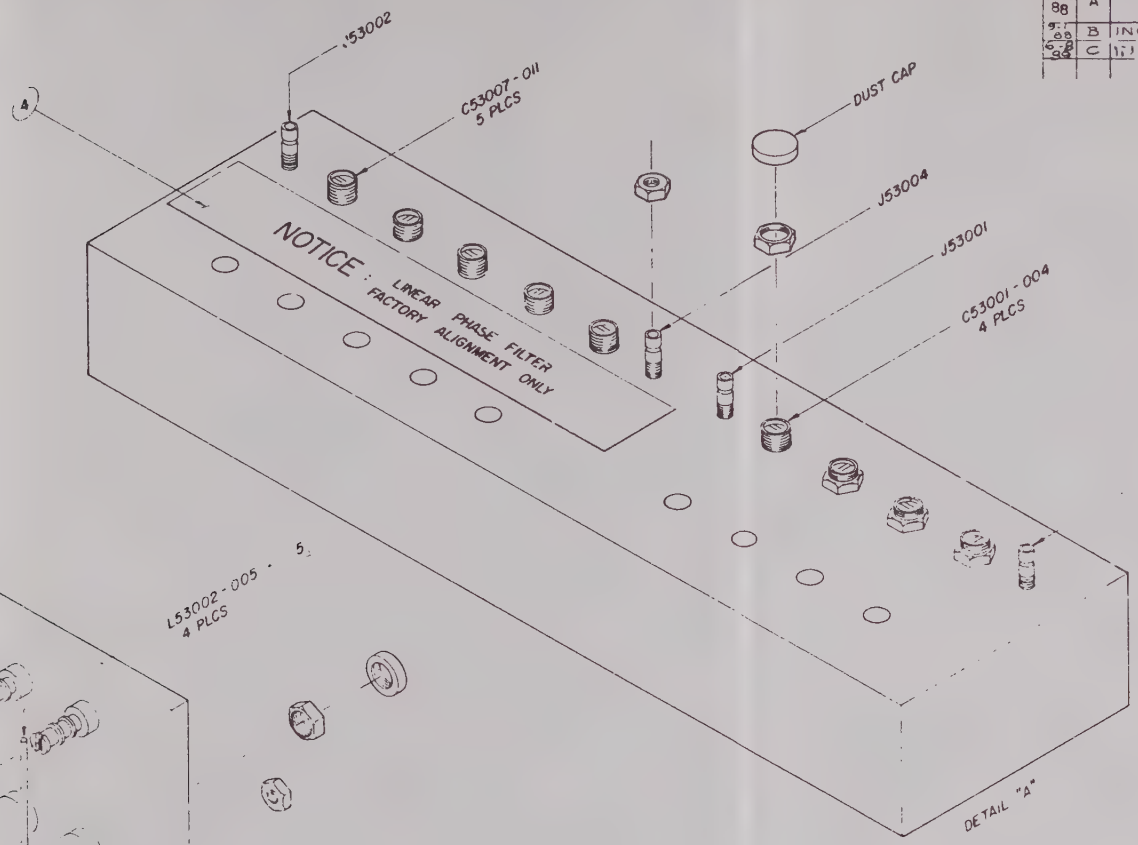

NOTES:

1. IND L8, L9, L10, L11, L12 ARE FORMED BY .15" 18GA
2. IND L17 IS A .4" LEAD ON L13
3. NOT USED
4. IND L1, L16 ARE FORMED BY .5" 22GA
5. IND L2, L3, L4, L5 ARE FORMED BY .7" 18GA
6. ALL REFERENCE DESIGNATORS CARRY AN ASSIGNED DESIGNATOR SERIES. THIS DRAWING CARRIES SERIES _53XXX_____ (e.i., C1 IS C53001)

PRODUCTION PRINT

TOLERANCES: (UNLESS OTHERWISE SPECIFIED)
ALL DIMENSIONS APPLY AFTER FINISH

MATERIAL: NONE
FINISH: NONE

IFR SYSTEMS INC
10200 West York St Wichita Kansas 67215

DRAWN: HOA VU 6/1/88
CHECKED:
APPROVED:

TITLE: MECH ASSY, 475/570-775 MHz FILTER RD-301

SIZE: D | DWG NO: 7005-4943-000 | REV: C

SCALE: 2:1 | DO NOT SCALE DRAWING | FSCM 37130 | SHEET 1 OF 1

ASSY NO.	REVISION	DESCRIPTION	LAST ECN	DATE INC
7005-4943-000	C	MECH ASSY,475/570-775MHZ FLTR	12438	06/05/89

STAT	REF.DES.	QTY	COMP. PART NO.	DESCRIPTION	EFFECTIVE
ACT	*01	1.00	2100-4955-000	BLOCK FILTER	00/00/00
ACT	*02	10.00	2803-0188-006	SCREW,4-40 X 3/16 PPHM	00/00/00
ACT	*03	1.00	1414-4955-200	COVER FILTER	00/00/00
ACT	*04	1.00	2400-4955-800	LABEL,FACTORY ALIGNMENT ONLY	00/00/00
ACT	*L53001	.00	1050-0000-073	WIRE,BUS,TINNED COPPER,22GA	00/00/00
ACT	*L53002	.00	1050-0000-071	WIRE,BUS,TINNED COPPER,18GA	00/00/00
ACT	*L53003	-.--	1050-0000-071	WIRE,BUS,TINNED COPPER,18GA	00/00/00
ACT	*L53004	-.--	1050-0000-071	WIRE,BUS,TINNED COPPER,18GA	00/00/00
ACT	*L53005	-.--	1050-0000-071	WIRE,BUS,TINNED COPPER,18GA	00/00/00
ACT	*L53008	-.--	1050-0000-071	WIRE,BUS,TINNED COPPER,18GA	00/00/00
ACT	*L53009	-.--	1050-0000-071	WIRE,BUS,TINNED COPPER,18GA	00/00/00
ACT	*L53010	-.--	1050-0000-071	WIRE,BUS,TINNED COPPER,18GA	00/00/00
ACT	*L53011	-.--	1050-0000-071	WIRE,BUS,TINNED COPPER,18GA	00/00/00
ACT	*L53012	-.--	1050-0000-071	WIRE,BUS,TINNED COPPER,18GA	00/00/00
ACT	*L53016	-.--	1050-0000-073	WIRE,BUS,TINNED COPPER,22GA	00/00/00
ACT	C53001	9.00	1558-0800-500	CAP,VAR, 1.0-14PF,250V, 5402	00/00/00
ACT	C53002	-.--	1558-0800-500	CAP,VAR, 1.0-14PF,250V, 5402	00/00/00
ACT	C53003	-.--	1558-0800-500	CAP,VAR, 1.0-14PF,250V, 5402	00/00/00
ACT	C53004	-.--	1558-0800-500	CAP,VAR, 1.0-14PF,250V, 5402	00/00/00
ACT	C53005	2.00	1506-0020-017	CAP,PF 2.2,100V,NPO,25	00/00/00
ACT	C53006	2.00	1506-0010-017	CAP,PF 1.0, 100V,MICA, 50	00/00/00
ACT	C53007	-.--	1558-0800-500	CAP,VAR, 1.0-14PF,250V, 5402	00/00/00
ACT	C53008	-.--	1558-0800-500	CAP,VAR, 1.0-14PF,250V, 5402	00/00/00
ACT	C53009	-.--	1558-0800-500	CAP,VAR, 1.0-14PF,250V, 5402	00/00/00
ACT	C53010	-.--	1558-0800-500	CAP,VAR, 1.0-14PF,250V, 5402	00/00/00
ACT	C53011	-.--	1558-0800-500	CAP,VAR, 1.0-14PF,250V, 5402	00/00/00

ASSY NO.	REVISION	DESCRIPTION	LAST ECN	DATE INC
7005-4943-000	C	MECH ASSY,475/570-775MHZ FLTR	12438	06/05/89

STAT	REF.DES.	QTY	COMP. PART NO.	DESCRIPTION	EFFECTIVE
ACT	C53012	1.00	1506-0689-017	CAP,PF 6.8, 100V,NPO 5	00/00/00
ACT	C53013	-.--	1506-0020-017	CAP,PF 2.2,100V,NPO,25	00/00/00
ACT	C53014	-.--	1506-0010-017	CAP,PF 1.0, 100V,MICA, 50	00/00/00
ACT	J53001	4.00	2123-0000-036	CONN,M SMB,W/TERM,STR BULKHEAD	00/00/00
ACT	J53002	-.--	2123-0000-036	CONN,M SMB,W/TERM,STR BULKHEAD	00/00/00
ACT	J53003	-.--	2123-0000-036	CONN,M SMB,W/TERM,STR BULKHEAD	00/00/00
ACT	J53004	-.--	2123-0000-036	CONN,M SMB,W/TERM,STR BULKHEAD	00/00/00
ACT	L53006	3.00	1801-0337-002	IND, .033UH,.035OHM102604	00/00/00
ACT	L53007	-.--	1801-0337-002	IND, .033UH,.035OHM102604	00/00/00
ACT	L53013	-.--	1801-0337-002	IND, .033UH,.035OHM102604	00/00/00
ACT	L53014	1.00	1801-0158-001	IND, .15UH,.1 OHM,1025-00	00/00/00
ACT	L53015	1.00	1801-0000-007	IND, .068 UH, .060 OHM	00/00/00
ACT	L53017	1.00	0003-0000-000	***** FOR REFERENCE ONLY *****	00/00/00

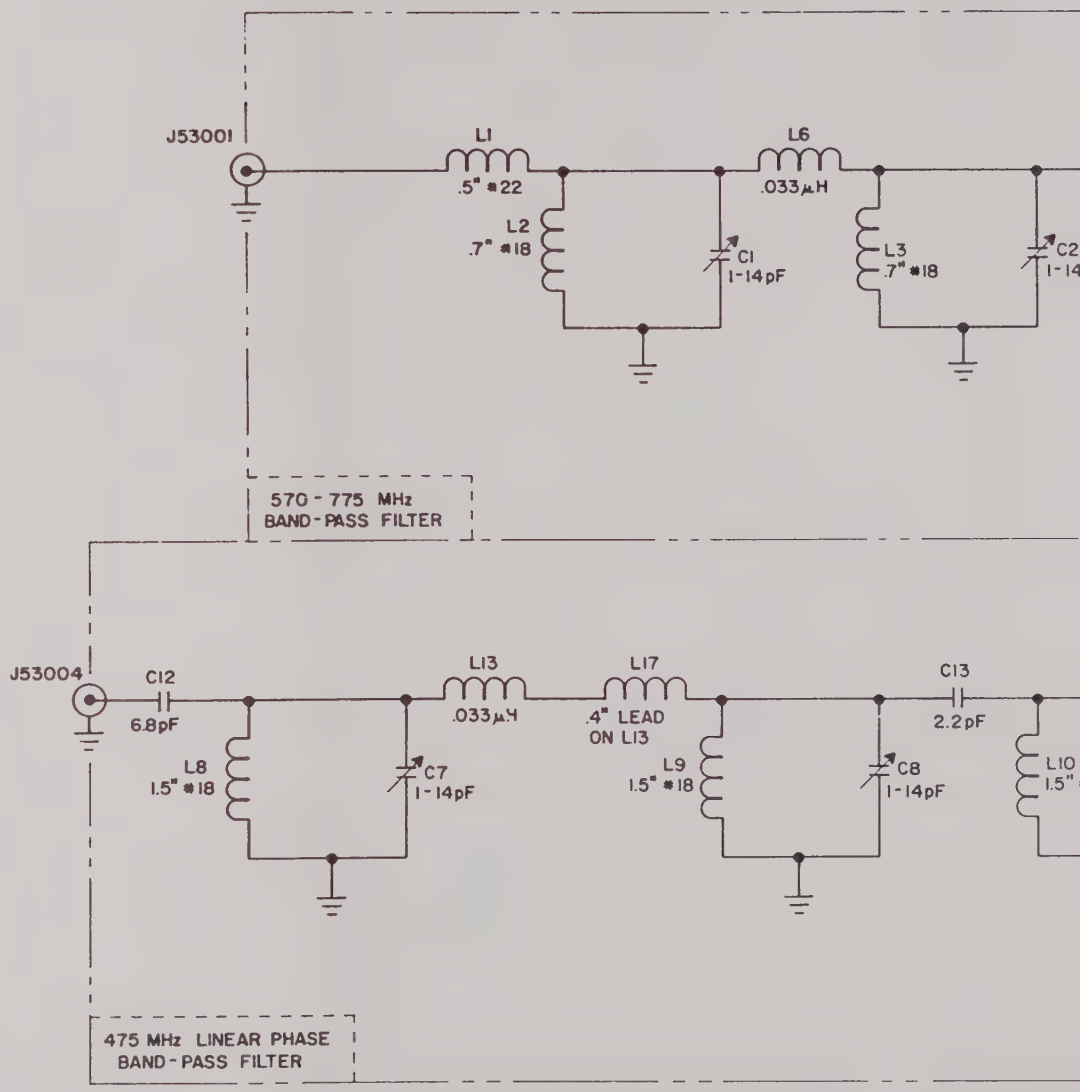

STANDARDS:

1. ALL REFERENCE DESIGNATORS CARRY AN ASSIGNED DESIGNATOR SERIES. THIS DRAWING CARRIES SERIES 53000 (ei., C1 IS C53001)
2. ALL CAPACITANCE IS EXPRESSED IN PICO FARADS, UNLESS OTHERWISE NOTED.
3. ALL INDUCTANCE IS EXPRESSED IN MICRO HENRYS, UNLESS OTHERWISE NOTED.

NOTES:

1) LAST REFERENCE DES
L17, C14, J4
2) REFERENCE DESIGNA
NONE

DATE	REV	CHANGE	APVD
7-13 88	A	PRODUCTION RELEASE PER ECN 11166	BP

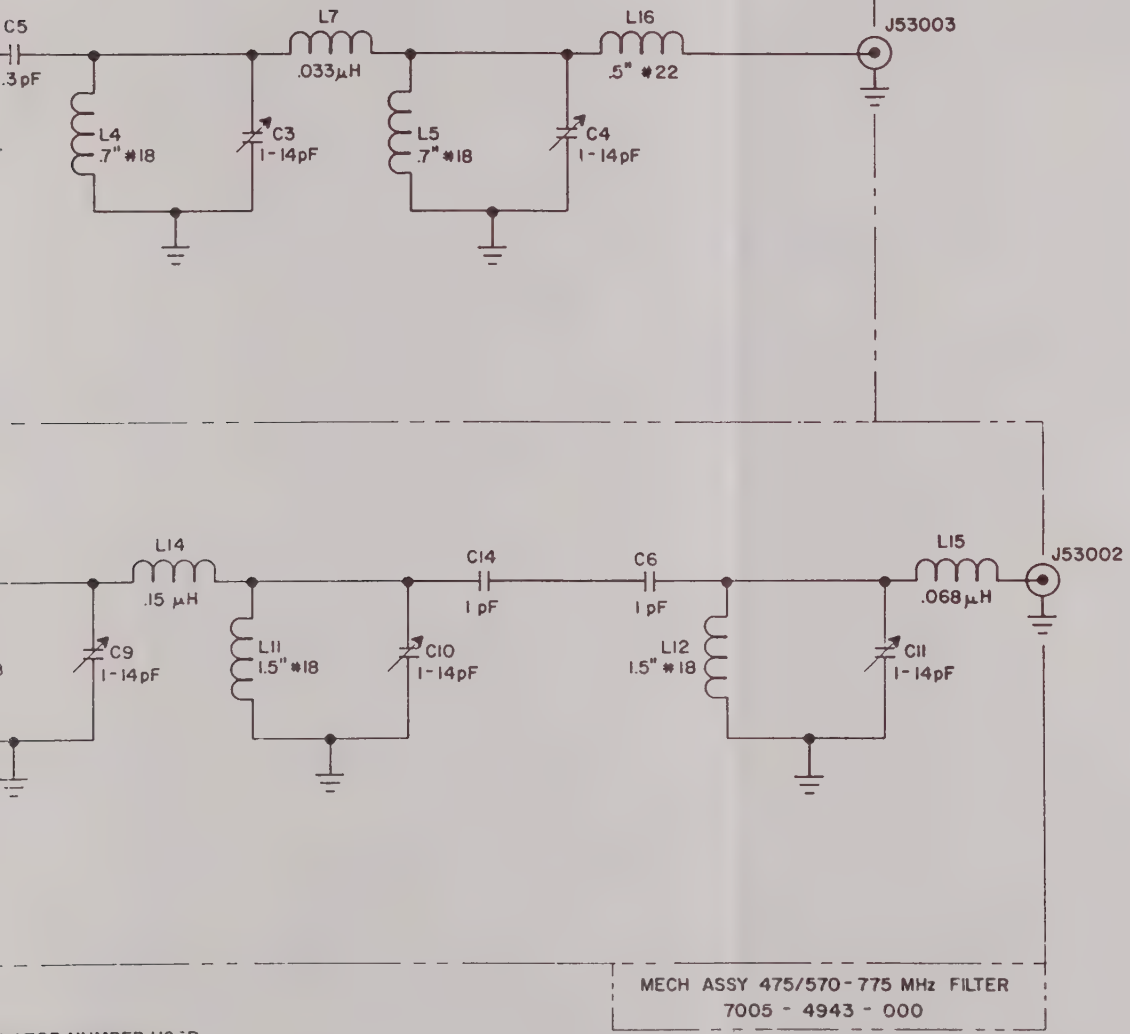

MECH ASSY 475/570-775 MHz FILTER
7005 - 4943 - 000

NATOR NUMBER USED:

RS NOT USED:

DRAWN HOA VU	DATE 6/27/88	IFR SYSTEMS INC 10200 West York St., Wichita, Kansas 67215	
CHECKED	DATE	TITLE SCHEMATIC, 475/570-775 MHz FILTER RD-301	
APPROVED	DATE 7/28	SIZE C	DWG NO 0000-4913-000 REV A
		SCALE OR AS NOTED NONE	DO NOT SCALE THIS DRAWING FSCM CODE 51180 SHEET 1 OF 1

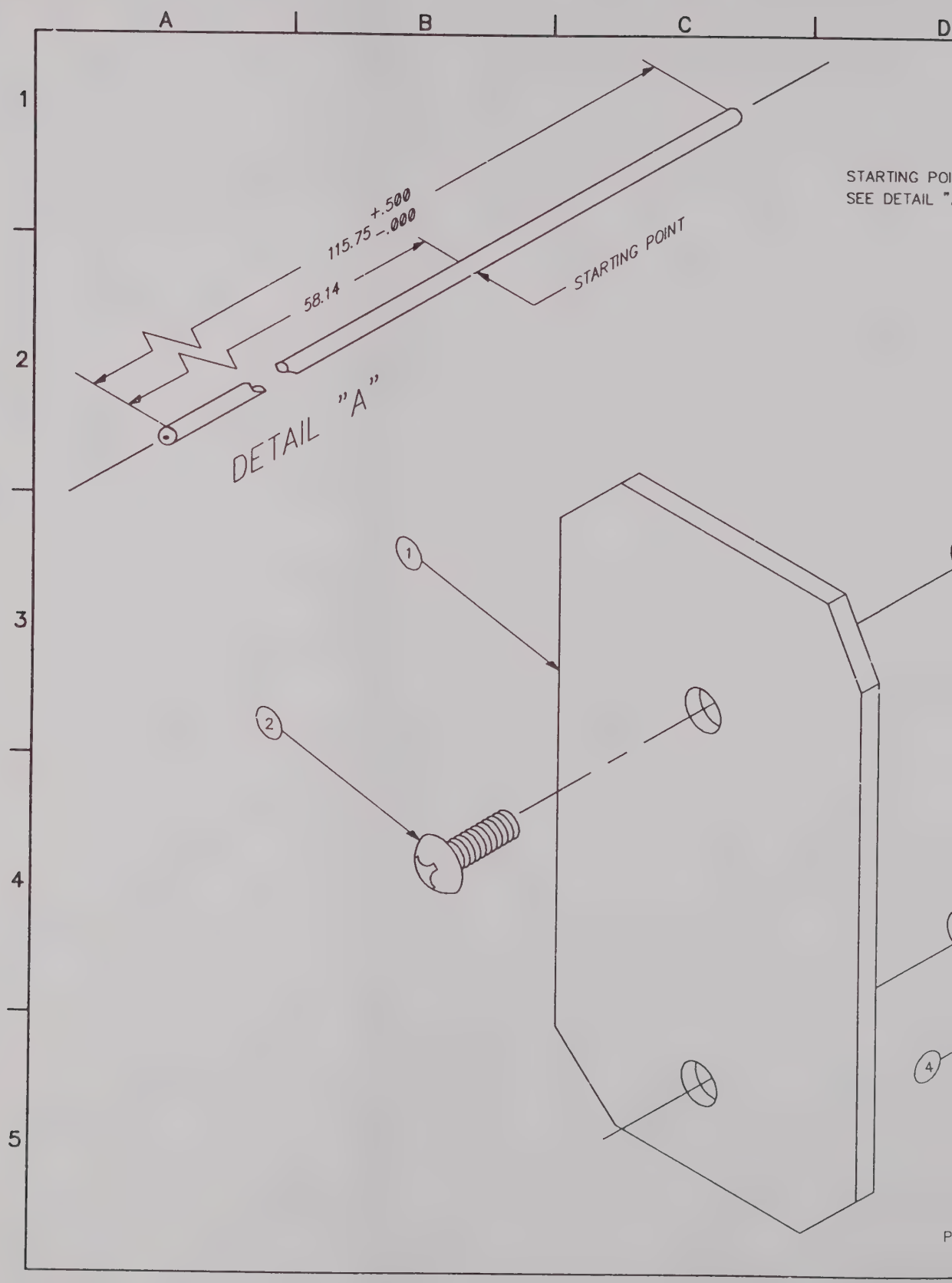
A
B
C
D
1
2
3
4
5
115.75 +.500 -.000
58.14
STARTING POINT
DETAIL "A"
STARTING POI
SEE DETAIL "
1
2
4

E F G

DATE	REV	CHANGE	APVD
11-5-91	A	DESIGN RELEASE	SL

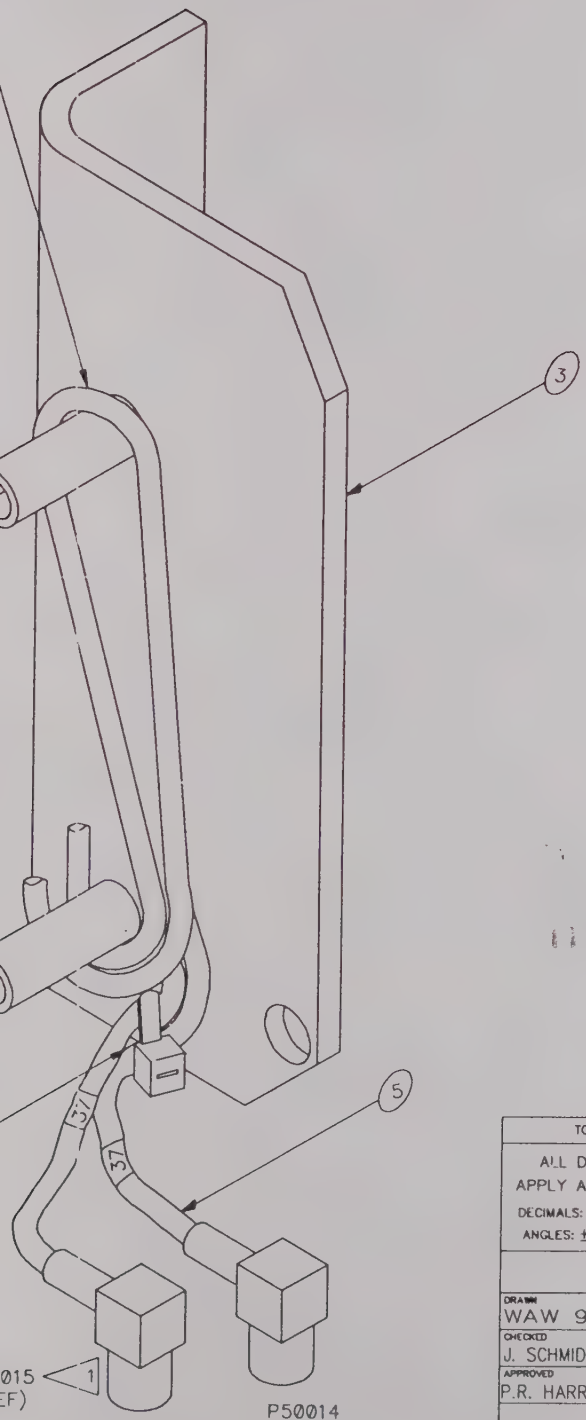

NOTES:

1. P50015 IS INSTALLED AT FINAL TEST.
2. ALL REF DES CARRY AN ASSIGNED DESIGNATOR SERIES. THIS DRAWING CARRIES SERIES 20000.
3. COAX TAG #37.
4. REF. INTERCONNECT 0000-9040-000.

TOLERANCES: (UNLESS OTHERWISE SPECIFIED)	MATERIAL
ALL DIMENSIONS APPLY AFTER FINISH SURFACE FINISH: REMOVE ALL BURRS DECIMALS: .XXX= ± .010 .XXXX= ± .0050 ANGLES: ±1/2DEG.	5052-H32 ALUM FINISH: IRIDITE

	IFR SYSTEMS INC 1420 West York St., Wichita, Kansas 67213	
DRAWN WAW 9-20-91	TITLE: MECH ASSY DELAY LINE, RD-301A	
CHECKED J. SCHMIDT 10-25-91		
APPROVED P.R. HARRIS 11-5-91	SIZE C; DWG. NO. 7005-9041-000	REV A
	SCALE: NONE; DO NOT SCALE; CAGE 51190; SHEET 1 OF 1	

ASSY NO.	REVISION	DESCRIPTION	LAST ECN	DATE INC
7005-9041-000	A	MECH ASSY, DELAY LINE		10/30/71

STAT	REF.DES.	QTY	COMP. PART NO.	DESCRIPTION	EFFECTIVE
ACT	*01	1.00	1414-4952-300	COVER PLATE,DELAY LINE	00/00/00
ACT	*02	2.00	2303-0438-006	SCREW,4-40 X 7/16 PPHM	00/00/00
ACT	*03	1.00	1400-9051-600	BRKT,DELAY LINE MTG	00/00/00
ACT	*04	1.00	6004-6005-400	TY-RAP,4.0 LG	00/00/00
ACT	*05	9.64	6042-0000-007	CABLE,COAX,FLEX,RG-316/U	00/00/00
ACT	P50014	2.00	2123-0000-037	CONN, F, SMB,RA,PLUG, CR,N, *	00/00/00
ACT	P50015	-.--	2123-0000-037	CONN, F, SMB,RA,PLUG, CR,N, *	00/00/00

A
B
C
D
E
1
2
3
4
5
6
7
E31003
E31004
E31005
E31006
J14001 (REF)
7 (4) PLCS
7 (4) PLCS
5
15
E01
E03
E02
A
1
14
3
6 (2) PLCS
10 (2) PLCS
9
DS14003
DS14002
DS14001
A
7
E26001
12
E21003
E21004
13
8
11
7 (REF)

F | G | H | J | K | L

DATE	REV	CHANGE	APVD
10/22/91	A	DESIGN RELEASE	SL
4/22/92	A1	INC REF #L127 RH	SL

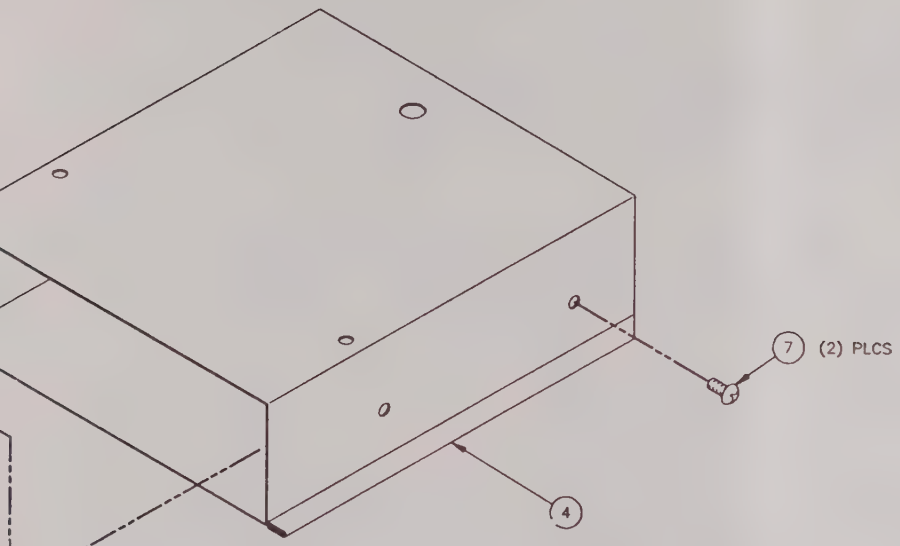

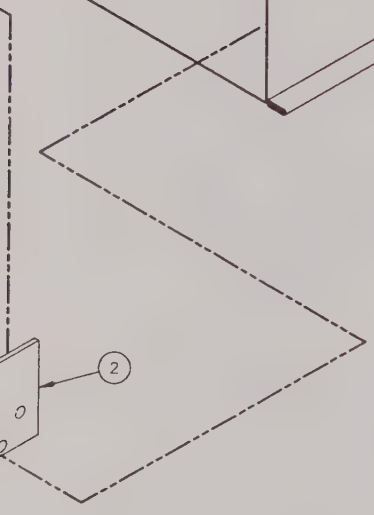

13 (4) PLCS

PLCS

NOTES:

1. ALL REFERENCE DESIGNATORS CARRY AN ASSIGNED DESIGNATOR SERIES, THIS DWG. CARRIES SERIES 14000 (i.e., R1 IS R14001).
2. REF. SCHEMATIC #0000-9040-800.
3. ITEM 6 SOLDERS TO BOTTOM SIDE OF ITEM 5 AND TOP SIDE OF ITEM 8.

WIRE RUNNING LIST

FROM	TO	COLOR	AWG	LENGTH
E02	E26001	ORN/WHT	22	4.0±.10
E03	E31005	BLACK	22	4.0±.10
E01	E31006	ORANGE	22	4.0±.10
E21003	E31003	FLEXSTRIP		
E21004	E31004	FLEXSTRIP		

DRAWN	S. PERKINS	8/7/91
CHECKED	J. SCHMIDT	10/21/91
APPROVED	P. HARRIS	10/21/91

IFR SYSTEMS INC
10200 West York St., Wichita, Kansas 67215

TITLE: MECH. ASS'Y, DISPLAY COUNTER

SIZE	DWG. NO.	REV
D	7005-9040-800	A1

SCALE: 1=1 | DO NOT SCALE | CAGE 51190 | SHEET 1 OF 1

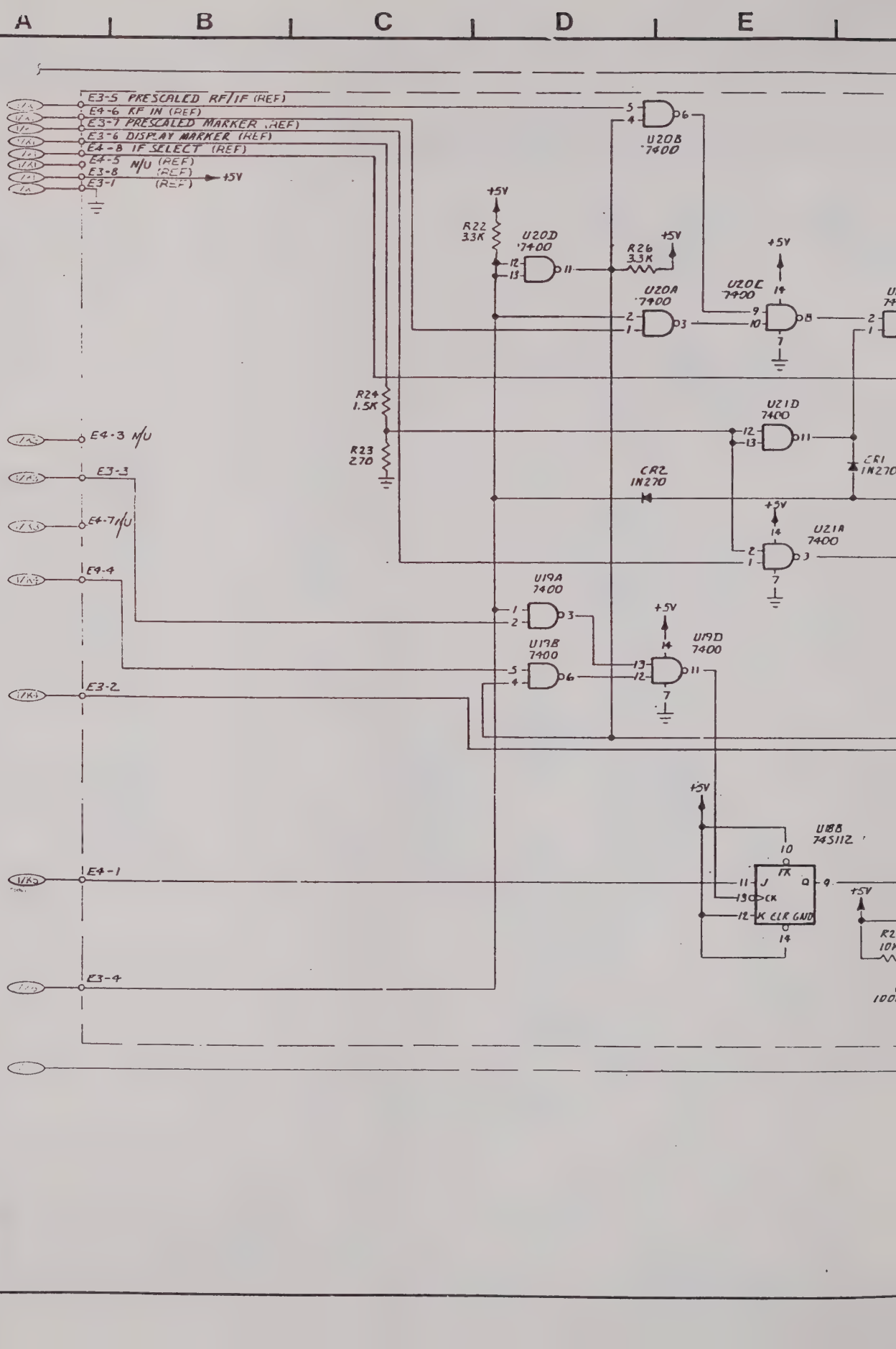
A
B
C
D
E
E3-5 PRESCALED RF/IF (REF)
E4-6 RF IN (REF)
E3-7 PRESCALED MARKER (REF)
E3-6 DISPLAY MARKER (REF)
E4-8 IF SELECT (REF)
E4-5 N/U (REF)
E3-8 N/U (REF)
E3-1 N/U (REF)
+5V
U20B 7400
R22 3.3K
U20D 7400
R26 3.3K
U20A 7400
U20C 7400
R24 1.5K
R23 270
U21D 7400
CR2 IN270
CR1 IN270
U21A 7400
E4-3 N/U
E3-3
E4-7 N/U
E4-4
U19A 7400
U19B 7400
U19D 7400
E3-2
U18B 74S112
E4-1
E3-4

F G H J K L

		SEE SHEET 1 FOR REVISIONS

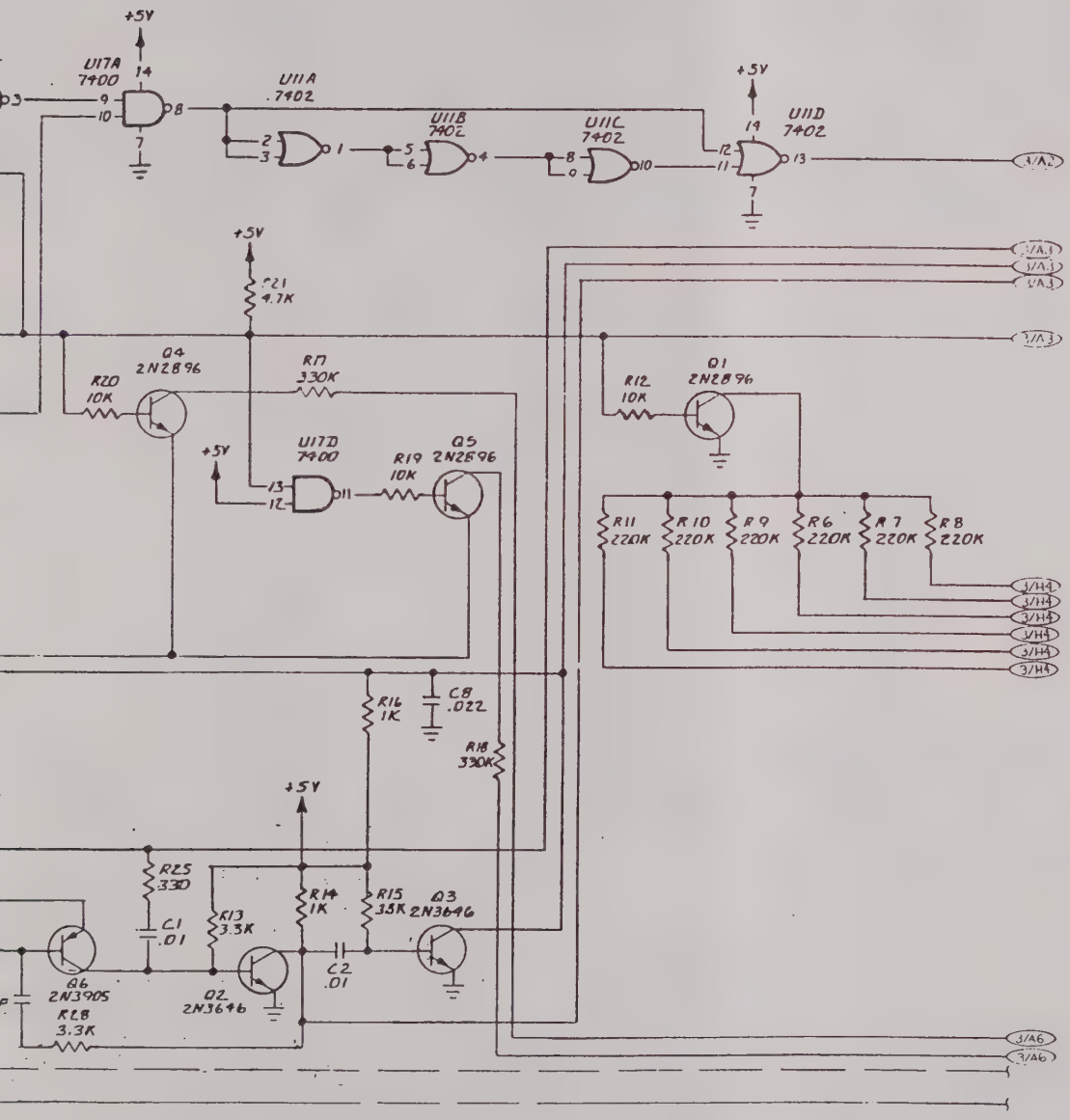

SEE SHEET 3 FOR NOTES

		- IFR INC -
S. PERKINS 11/22/91	TITLE	SCHEMATIC DISPLAY COUNTER
J. SCHMIDT 12-5-91	MECH	RD301A
P. HARRIS 12-6-91	D	0000-9040-800 A1
	SCALE .25	SHEET 2 OF 4

(11)

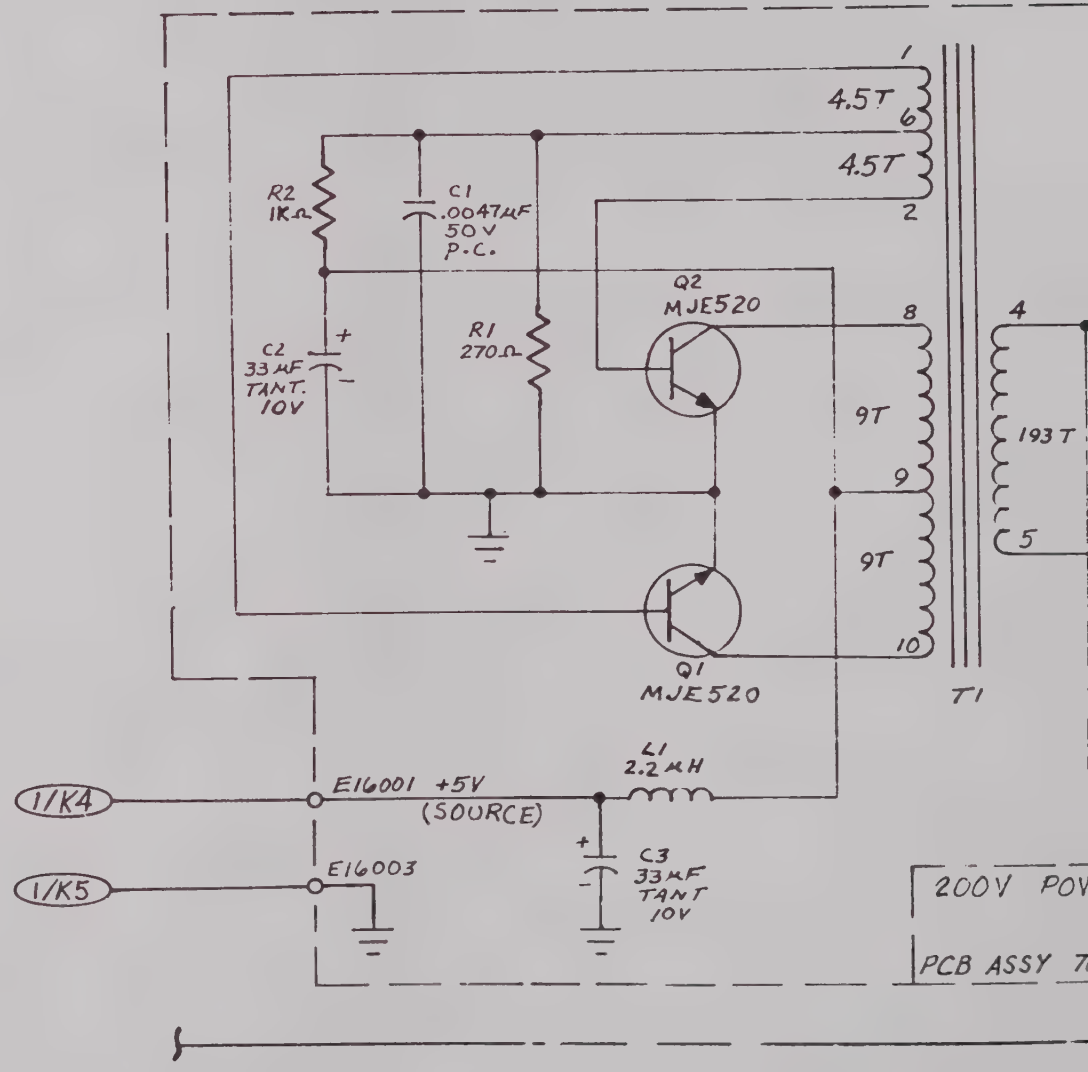

NOTES:

1. T1 IS AN ALADDIN TRANSFORMER P/N 326-0142 REV "A".
2. "*" DENOTES COMPONENT INSTALLED AT MANUFACTURERS' OPTION.

E F G H

DATE	REV	CHANGE	APVD
		SEE SHEET 1 FOR REVISIONS	

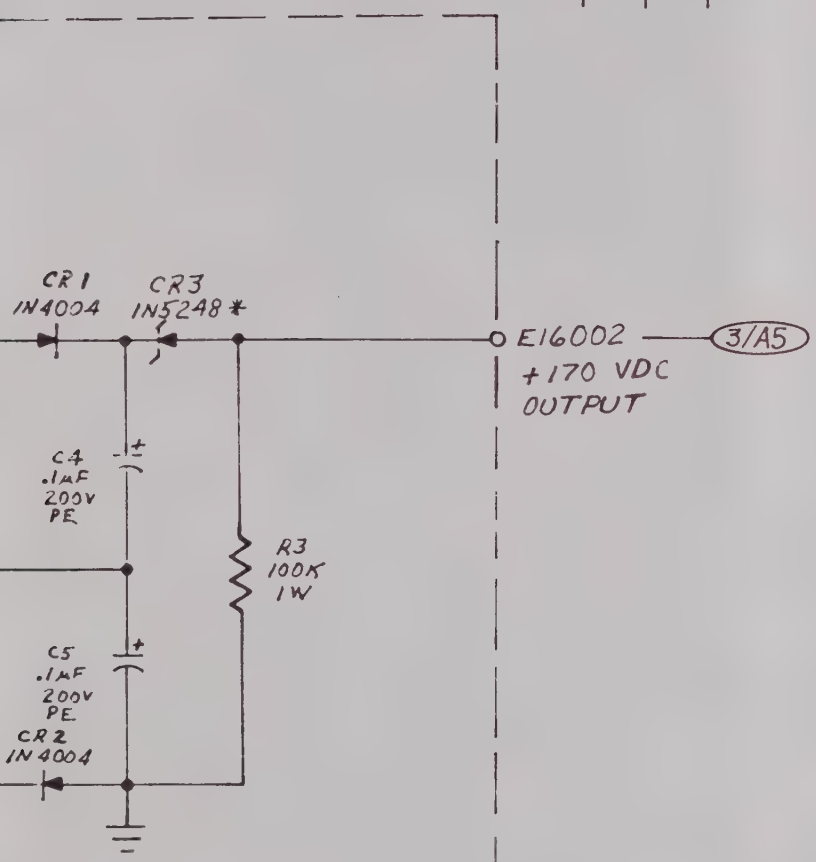

ER SUPPLY

0-0815-800 (REF DES 16000)

SEE SHEET 3 FOR NOTES

DRAWN S.PERKINS DATE 11/22/91	IFR SYSTEMS INC 10200 West York St., Wichita, Kansas 67215	
CHECKED J.SCHMIDT DATE 12-5-91	TITLE SCHEMATIC DISPLAY COUNTER MECH RD301A	
APPROVED P.HARRIS DATE 12-6-91	SIZE B DWG. NO. 0000-9040-800 REV A1	
	SCALE: OR AS NOTED DO NOT SCALE THIS DRAWING FSCM CODE 51190 SHEET 4 OF 4	

ASSY NO.	REVISION	DESCRIPTION	LAST ECN	DATE INC
7005-9040-800	A1	MECH ASSY,DISPLAY COUNTER	#L127	04/24/92

STAT	REF.DES.	QTY	COMP. PART NO.	DESCRIPTION		EFFECTIVE
ACT		.30	6002-0000-001	WIRE,HOOK,TFE,22GA, 7S,BLACK		00/00/00
ACT		.30	6002-0000-004	WIRE,HOOK,TFE,22GA, 7S,ORANGE		00/00/00
ACT		.30	6002-0000-014	WIRE,HOOK,TFE,22GA, 7S,WHT/ORG		00/00/00
ACT	*01	1.00	1400-9051-200	BRKT,DISPLAY MTG LEFT		00/00/00
ACT	*02	1.00	1400-9051-100	BRKT,DISPLAY MTG RIGHT		00/00/00
ACT	*04	1.00	6501-4982-400	ENCLOSURE,DISPLAY COUNTER		00/00/00
ACT	*05	1.00	7010-2518-000	COUNTER GATING PC BD ASSY RD		00/00/00
ACT	*06	2.00	6009-0000-005	FLEX STRIP,NM,.100C, 8COND,2LG		00/00/00
ACT	*07	15.00	2803-0250-006	SCREW,4-40 X 1/4 PPHM		00/00/00
ACT	*08	1.00	7010-4931-600	PCB ASSY,COUNTER LOGIC		00/00/00
ACT	*09	1.00	7010-2517-800	COUNTER DISPLAY PC BD ASSY RD		00/00/00
ACT	*10	2.00	1400-9051-300	BRKT,DISPLAY/PWR SUPPLY		00/00/00
ACT	*11	1.00	2840-7600-209	WASHER FLAT,PHENOLIC	2	00/00/00
ACT	*12	1.00	2100-4852-200	BLOCK, CONN. MTG.		00/00/00
ACT	*13	5.00	2803-0250-003	SCREW,4-40 X 1/4 PFHM		00/00/00
ACT	*14	1.00	3107-9051-400	INSULATOR,PWR SUPPLY/DISPLAY		00/00/00
ACT	*15	1.00	7010-0815-800	200V PWR SUPPLY BD ASSY 600		00/00/00
ACT	DS14001	3.00	4600-0000-001	OPTO DISPLAY,SP-352		00/00/00
ACT	DS14002	-.--	4600-0000-001	OPTO DISPLAY,SP-352		00/00/00
ACT	DS14003	-.--	4600-0000-001	OPTO DISPLAY,SP-352		00/00/00

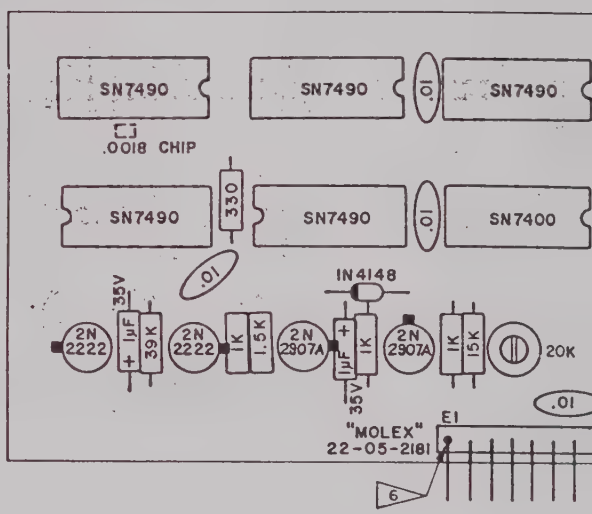

SCHEMATIC NO. 3-25-0102

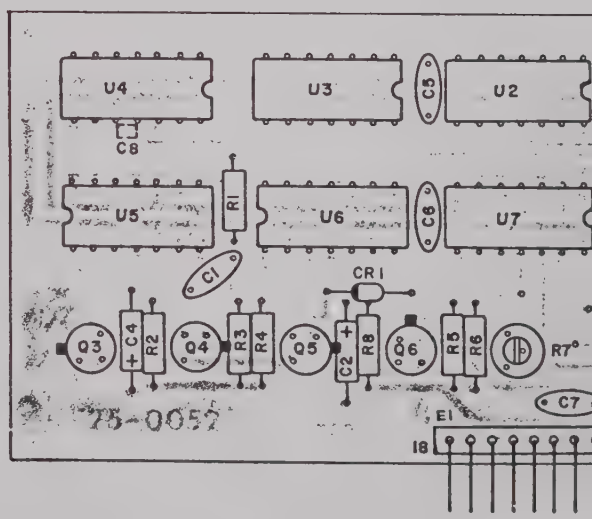

DATE	REV	CHANGE	APP'D
	B	INC RR ECN # 2245	
	B1	INC ECN 2787	
	C	INC ECN #3410	
	D		
	E	INC RC 8170 SJA	
	E2	INC ECN 10475	
	E3	INC ECN 15346	

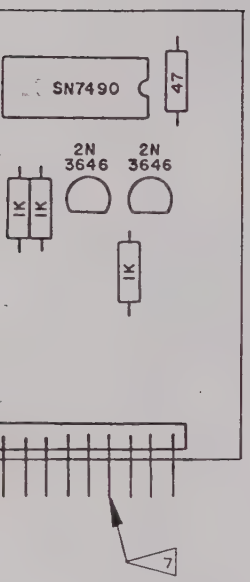

NOTES:

1. ALL RESISTORS ARE 1/4 W., 10% TOLERANCE EXCEPT AS NOTED.
2. ALL CAPACITOR VALUES ARE IN μF EXCEPT AS NOTED.
3. COMPONENT LEADS MAY EXTEND .04 TO .06 BEYOND BOTTOM OF BOARD AFTER SOLDERING.
4. MAXIMUM HEIGHT OF COMPONENTS TO BE .35 FROM COMPONENT SIDE OF BOARD.
5. PLACE CHIP CAPACITORS ON BACK SIDE OF BOARD.
6. 200V TO COUNTER DISPLAY BD. VIA AWG# 26 ORG/WHT WIRE SOLDERED TO THE BOTTOM SIDE OF PIN 18, (E1)
7. REMOVE PIN 4 FOR KEYING PURPOSES (E)
8. REFERENCE DESIGNATOR SERIES FOR THIS PC BOARD ASS'Y IS 31001 (I.E. R1 IS R31001) (E)

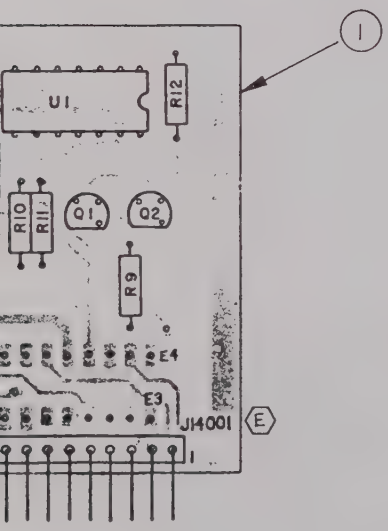

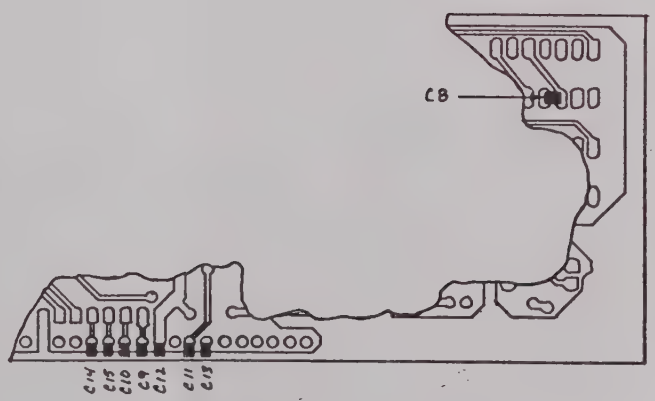

ITEM	REQ'D	PART NO.	DESCRIPTION
1	1	25-0180	PC BOARD ASS'Y

LIST OF MATERIALS

25-0177	1	RD-300	
NEXT ASSY	QTY	MODEL	

APPLICATION

TOLERANCES
UNLESS OTHERWISE SPECIFIED
ALL DIMENSIONS APPLY AFTER FINISH
DECIMALS: .xx = ± .010 .xxx = ± .005
ANGLES: ± 1/2°
FRACTIONS: ± 1/64
SURFACE ROUGHNESS 125 ✓
REMOVE ALL BURRS

DRAWN JNV DATE 1-28-77
CHECKED RKK DATE 2/8/77
APPROVED DATE 2/10/77

MATERIAL —
FINISH —

-IFR INC-
WICHITA, KANSAS

TITLE
COUNTER GATING PC BOARD ASSEMBLY DETAILS
RD-300 25-180

SIZE C | PART NUMBER 700-2518-000 | REV E3
SCALE 2X | WEIGHT — | SHEET 1 OF 1

(14)

REQUEST

BILL OF MATERIAL LISTED BY REFERENCE DESIGNATOR
AS OF REVISION E3

ASSEMBLY PART NO.: 7010-2518-000
DESCRIPTION: COUNTER GATING PC BD ASSY RD
ITEM MASTER REV: E3 ECO NO: 15346
REV OF THIS BOM: E3 DATE OF LAST ECO: 12/03/92

STATUS	REFERENCE DESIGNATOR	QUANTITY PER ASSY	PART NUMBER	DESCRIPTION	EFFEC
ACTIVE		.00	DWG-0000-2510-200	SCHEM,COUNTER LOGIC/GATING/DIS	00/00
ACTIVE	*01	1.00	1700-2505-200	BD PC 2	00/00
ACTIVE	C31001	4.00	1501-0103-005	CAP,UF .010, 50V,DISC, 10	00/00
ACTIVE	C31002	2.00	1507-0105-018	CAP,uF 1.0, 35V,TANT, 20 *	00/00
ACTIVE	C31003	1.00	1507-0685-020	CAP,UF 6.8, 15V,TANT, 20	00/00
ACTIVE	C31004	-.--	1507-0105-018	CAP,uF 1.0, 35V,TANT, 20 *	00/00
ACTIVE	C31005	-.--	1501-0103-005	CAP,UF .010, 50V,DISC, 10	00/00
ACTIVE	C31006	-.--	1501-0103-005	CAP,UF .010, 50V,DISC, 10	00/00
ACTIVE	C31007	-.--	1501-0103-005	CAP,UF .010, 50V,DISC, 10	00/00
ACTIVE	C31008	1.00	1523-0000-002	CAP,PF 1800, 50V,CHIP,X7R	00/00
ACTIVE	C31009	2.00	1620-1010-100	CAP, PF 100, 100V, CHIP NPO *	12/07
ACTIVE	C31010	5.00	1523-0000-007	CAP, uF .1, 25V, CHIP Z5U *	12/07
ACTIVE	C31011	-.--	1523-0000-007	CAP, uF .1, 25V, CHIP Z5U *	12/07
ACTIVE	C31012	-.--	1523-0000-007	CAP, uF .1, 25V, CHIP Z5U *	12/07
ACTIVE	C31013	-.--	1523-0000-007	CAP, uF .1, 25V, CHIP Z5U *	12/07
ACTIVE	C31014	-.--	1523-0000-007	CAP, uF .1, 25V, CHIP Z5U *	12/07
ACTIVE	C31015	-.--	1620-1010-100	CAP, PF 100, 100V, CHIP NPO *	12/07
ACTIVE	CR31001	1.00	4815-0000-003	DIODE, 1N4148 ,SIGNAL, 75PRV	00/00
ACTIVE	J14001	1.00	2115-0000-021	CONN MOLEX 22-05-2181	00/00
ACTIVE	Q31001	2.00	4805-0000-003	TRANS, 2N3646 ,NPN HS SW	00/00
ACTIVE	Q31002	-.--	4805-0000-003	TRANS, 2N3646 ,NPN HS SW	00/00
ACTIVE	Q31003	2.00	4801-0000-001	TRANSISTOR NPN HS SW *	00/00

BILL OF MATERIAL LISTED BY REFERENCE DESIGNATOR
AS OF REVISION E3

ASSEMBLY PART NO.: 7010-2518-000
DESCRIPTION: COUNTER GATING PC BD ASSY RD
ITEM MASTER REV: E3 ECO NO: 15346
REV OF THIS BOM: E3 DATE OF LAST ECO: 12/03/92

STATUS	REFERENCE DESIGNATOR	QUANTITY PER ASSY	PART NUMBER	DESCRIPTION	EFFEC
ACTIVE	Q31004	-.--	4801-0000-001	TRANSISTOR NPN HS SW *	00/00
ACTIVE	Q31005	2.00	4805-0000-001	TRANS,2N2907A,PNP HS SW (3251)	00/00
ACTIVE	Q31006	-.--	4805-0000-001	TRANS,2N2907A,PNP HS SW (3251)	00/00
ACTIVE	R31001	1.00	4702-0331-003	RES, 5%, 1/4W 330 OHM *	00/00
ACTIVE	R31002	1.00	4702-0393-003	RES, 5, 1/4W, 39K OHM	00/00
ACTIVE	R31003	6.00	4702-0102-003	RES, 5, 1/4W, 1.0K OHM	00/00
ACTIVE	R31004	1.00	4702-0152-003	RES, 5, 1/4W, 1.5K OHM	00/00
ACTIVE	R31005	-.--	4702-0102-003	RES, 5, 1/4W, 1.0K OHM	00/00
ACTIVE	R31006	1.00	4702-0153-003	RES, 5, 1/4W, 15K OHM	00/00
ACTIVE	R31007	1.00	4752-0203-002	POT 20K OHM	00/00
ACTIVE	R31008	-.--	4702-0102-003	RES, 5, 1/4W, 1.0K OHM	00/00
ACTIVE	R31009	-.--	4702-0102-003	RES, 5, 1/4W, 1.0K OHM	00/00
ACTIVE	R31010	-.--	4702-0102-003	RES, 5, 1/4W, 1.0K OHM	00/00
ACTIVE	R31011	-.--	4702-0102-003	RES, 5, 1/4W, 1.0K OHM	00/00
ACTIVE	R31012	1.00	4702-0470-003	RES, 5, 1/4W, 47 OHM	00/00
ACTIVE	U31001	6.00	3130-0000-013	IC,7490A,DECADE COUNTER	00/00
ACTIVE	U31002	-.--	3130-0000-013	IC,7490A,DECADE COUNTER	00/00
ACTIVE	U31003	-.--	3130-0000-013	IC,7490A,DECADE COUNTER	00/00
ACTIVE	U31004	-.--	3130-0000-013	IC,7490A,DECADE COUNTER	00/00
ACTIVE	U31005	-.--	3130-0000-013	IC,7490A,DECADE COUNTER	00/00
ACTIVE	U31006	-.--	3130-0000-013	IC,7490A,DECADE COUNTER	00/00
ACTIVE	U31007	1.00	3130-0000-001	IC,7400,QUAD 2-INPUT NAND	00/00

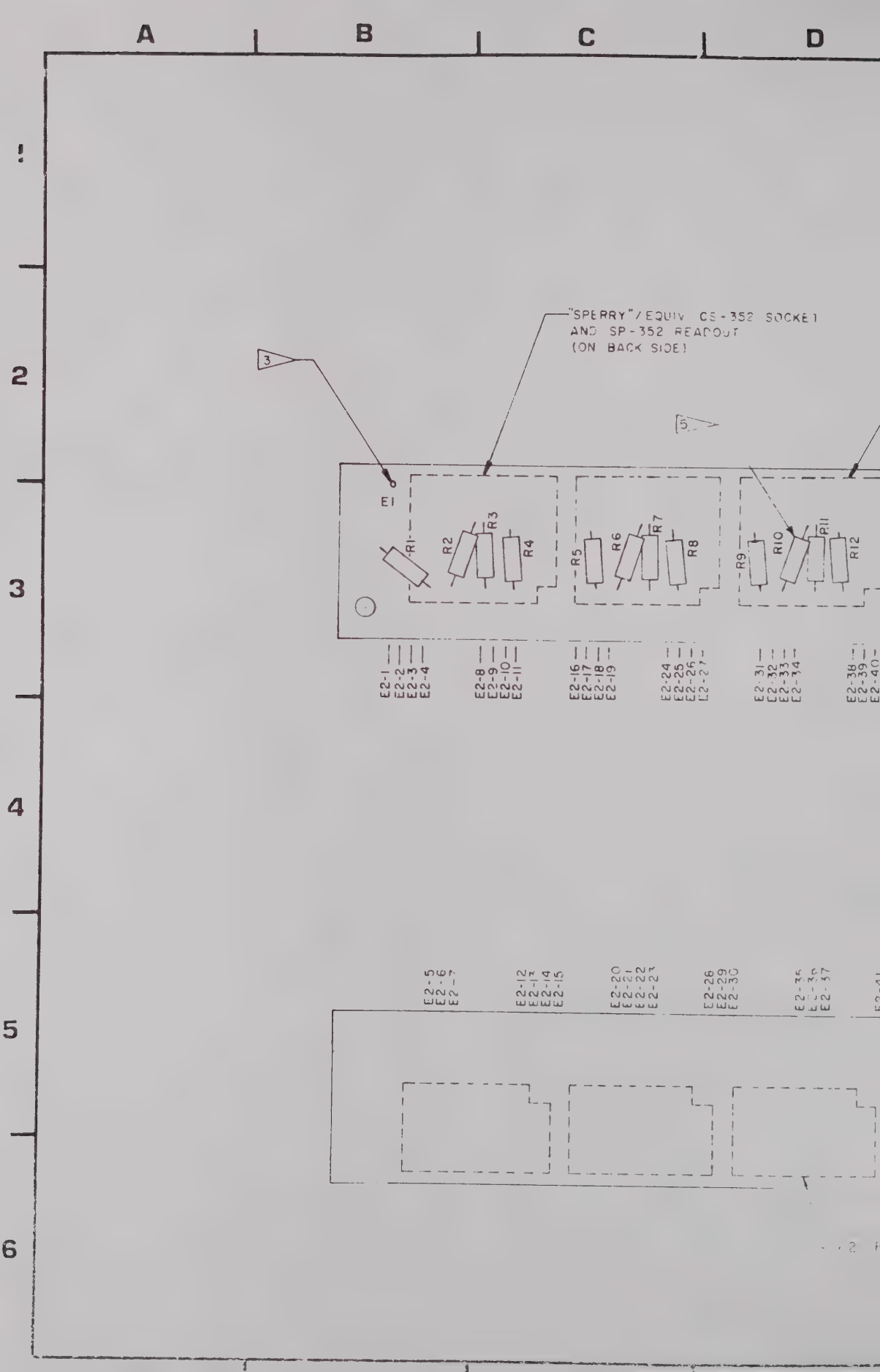
A
B
C
D
1
2
3
4
5
6
"SPERRY" / EQUIV CS-352 SOCKET
AND SP-352 READOUT
(ON BACK SIDE)
3
5
E1
R1
R2
R3
R4
R5
R6
R7
R8
R9
R10
R11
R12
E2-1
E2-2
E2-3
E2-4
E2-8
E2-9
E2-10
E2-11
E2-16
E2-17
E2-18
E2-19
E2-24
E2-25
E2-26
E2-27
E2-31
E2-32
E2-33
E2-34
E2-38
E2-39
E2-40
E2-5
E2-6
E2-7
E2-12
E2-13
E2-14
E2-15
E2-20
E2-21
E2-22
E2-23
E2-26
E2-29
E2-30
E2-36
E2-37

B-3	INC RC, REDRAWN, 9315	JM
C	INC ECN 958	
	RC104	
C-4	INC RC	

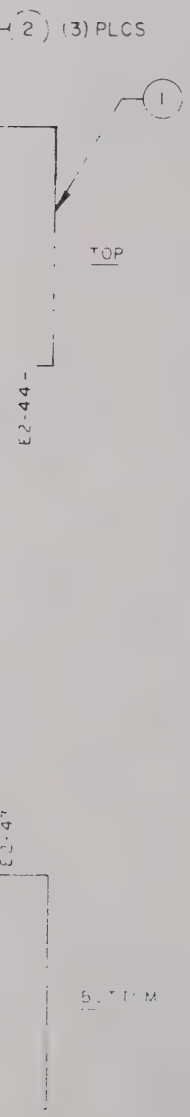

NOTES.

1. ALL RESISTORS ARE 1/4 W 10% UNLESS OTHERWISE SPECIFIED
2. LEADS MAY EXTEND ONLY .01-.02 BEYOND BOTTOM OF BOARD AFTER SOLDERING.
3. 200V FROM P14001-18 (E26001 FOR RD-301)
4. REF DESIGNATOR SERIES FOR THIS PC BOARD ASS'Y FOR RD-301 IS 26000 (I.E. R1 IS R26001)
5. CLEARANCE BETWEEN RESISTOR BODY AND SOCKET LEADS SHOULD BE NO LESS THAN 0.10"

TOLERANCES (UNLESS OTHERWISE SPECIFIED)

IFR SYSTEMS INC

COUNTER DISPLAY
PC BOARD ASSEMBLY
RD-300 25-178

JNV	1/31/77	
RKK	2/8/77	
ML	2/10/77	C 7010-2517-30

ASSY NO.	REVISION	DESCRIPTION	LAST ECN	DATE INC
7010-2517-800	C2	COUNTER DISPLAY PC BD ASSY RD	13400	04/30/90

STAT	REF.DES.	QTY	COMP. PART NO.	DESCRIPTION	EFFECTIVE
ACT		.00	DWG-0000-2510-200	SCHEM,COUNTER LOGIC/GATING/DIS	00/00/00
ACT	*01	1.00	1700-2505-100	BD PC 1	00/00/00
ACT	*02	3.00	3101-0000-001	SOCKET SPERRY CS352	00/00/00
ACT	R26001	6.00	4702-0222-003	RES, 5%, 1/4W 2.2K OHM *	00/00/00
ACT	R26002	6.00	4702-0125-003	RES, 5, 1/4W, 1.2MEG OHM	00/00/00
ACT	R26003	-.--	4702-0125-003	RES, 5, 1/4W, 1.2MEG OHM	00/00/00
ACT	R26004	-.--	4702-0222-003	RES, 5%, 1/4W 2.2K OHM *	00/00/00
ACT	R26005	-.--	4702-0222-003	RES, 5%, 1/4W 2.2K OHM *	00/00/00
ACT	R26006	-.--	4702-0125-003	RES, 5, 1/4W, 1.2MEG OHM	00/00/00
ACT	R26007	-.--	4702-0125-003	RES, 5, 1/4W, 1.2MEG OHM	00/00/00
ACT	R26008	-.--	4702-0222-003	RES, 5%, 1/4W 2.2K OHM *	00/00/00
ACT	R26009	-.--	4702-0222-003	RES, 5%, 1/4W 2.2K OHM *	00/00/00
ACT	R26010	-.--	4702-0125-003	RES, 5, 1/4W, 1.2MEG OHM	00/00/00
ACT	R26011	-.--	4702-0125-003	RES, 5, 1/4W, 1.2MEG OHM	00/00/00
ACT	R26012	-.--	4702-0222-003	RES, 5%, 1/4W 2.2K OHM *	00/00/00

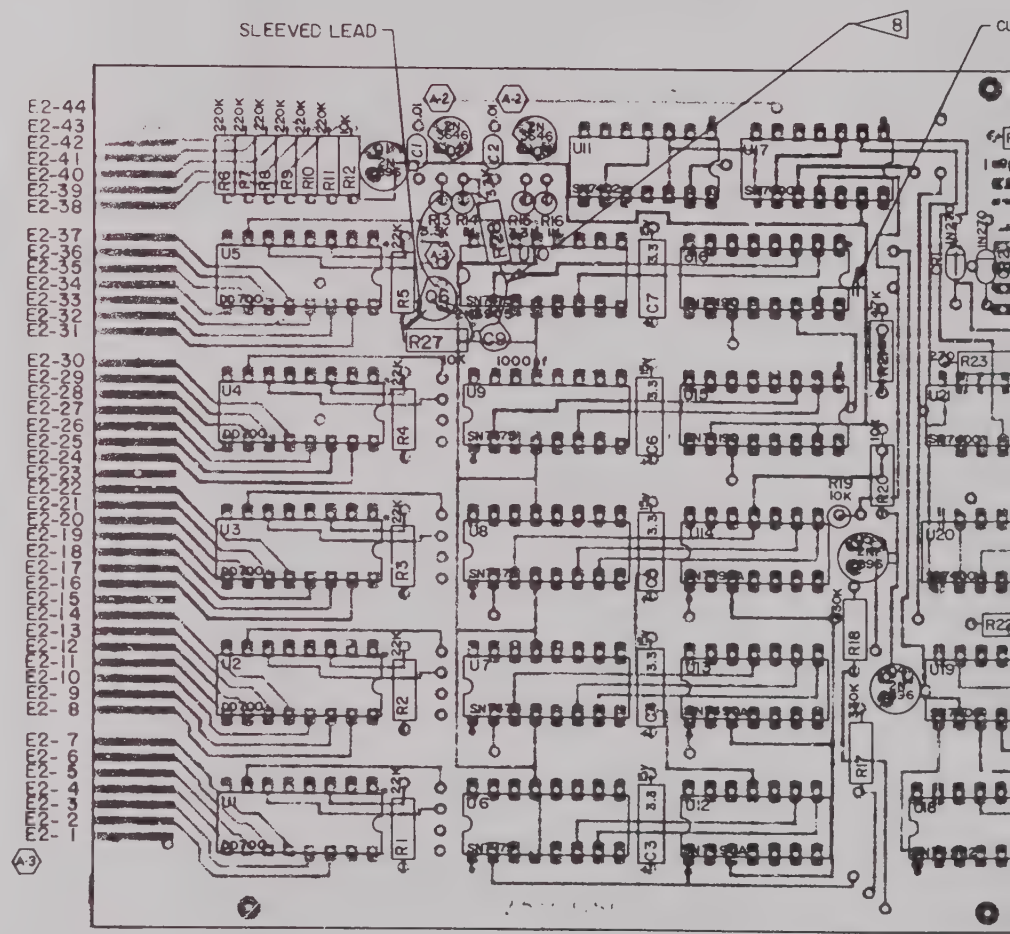

NOTE

1.
2.
3.
4.
5.
6.
7
8

17"
11"
8.5"

E F G H

DATE	REV	CHANGE	APVD
11/4/85	A	PROD. RELEASE ECN 6490	TP
8-1-85	A-1	INC ECN 7240 AO	DS
9-4-85	A-2	INC RC 7565 MKM	VLH
1/13/86	A-3	INC RC 8170 SJA	

PATH (1)

330

E3 (A-3)

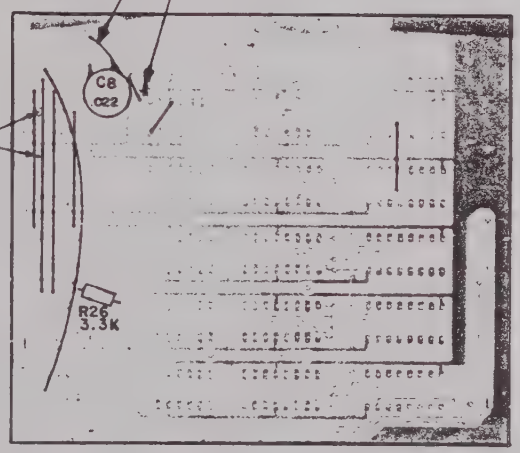

JUMPER WIRE LOCATION
SOLDER SIDE - 26ga SLEEVED BUSS (7)
(FULL SCALE)

L RESISTORS ARE 1/4 w, 5 % TOL, UNLESS OTHERWISE SPECIFIED.

L CAPACITORS ARE μf IN VALUE UNLESS OTHERWISE SPECIFIED.

ADS TO EXTEND .040 - .060 BEYOND BTM OF BD AFTER SOLDERING.

Y HT OF COMPONENTS TO BE .35 FROM COMPONENT SIDE OF BD, EXCEPT C8
22), TO BE PLACED VERTICALLY & AS CLOSE TO THE BD AS POSSIBLE.

ACE JUMPERS PER LOCATION DETAIL ABOVE & CUT PATHS WHERE SHOWN.

L COMPONENTS ARE OF REF. DES. SERIES 21XXX. (i.e. C2=C21002, R20=R21020, etc.)

CII-0018-001 SLEEVING, 1050-0000-075 BUSS WIRE.

IID-AIR CONNECTION (A-3)

DASH NO	REF DES SERIES	NEXT ASSY	MODEL
-600	21000	7005-4940-400	RD 301

APPLICATION

UNLESS OTHERWISE SPECIFIED: ALL DIMENSIONS APPLY AFTER PLATING
TOLERANCES
DECIMALS: .XX ± .01 .XXX ± .005
FRACTIONS ±
ANGLES ±
SURFACE FINISH
REMOVE ALL BURRS
DO NOT SCALE THIS DRAWING

MATERIAL ~

FINISH ~

-IFR INC- 10200 West York Street Wichita, Kansas 67215

DRAWN L.A.Meis,Jr.	DATE 21 Jan 1985	TITLE PC BOARD ASSY COUNTER LOGIC RD301 (49-316)
CHECKED WB	DATE 1-22-85	
APPROVED Greenbrook	DATE 1-25-85	SIZE C · DWG. NO. 7010-4931-600 · REV A-3
		SCALE 2:1 · CODE IDENT. 51180 · WEIGHT — · SHEET 1 OF 1

(14)

8.5" 11" 17"

ASSY NO.	REVISION	DESCRIPTION	LAST ECN	DATE INC
7010-4931-600	A3	PCB ASSY,COUNTER LOGIC	RC8170	01/17/86

STAT	REF.DES.	QTY	COMP. PART NO.	DESCRIPTION		EFFECTIVE
ACT		.00	DWG-0000-2510-200	SCHEM,COUNTER LOGIC/GATING/DIS		00/00/00
ACT	*01	1.00	1700-2505-000	BD PC	2	00/00/00
ACT	C21001	2.00	1506-0103-017	CAP, uF .010, 100V, NPO	*	00/00/00
ACT	C21002	-.--	1506-0103-017	CAP, uF .010, 100V, NPO	*	00/00/00
ACT	C21003	5.00	1507-0335-020	CAP, UF 3.3, 15V, TANT 20	*	00/00/00
ACT	C21004	-.--	1507-0335-020	CAP, UF 3.3, 15V, TANT 20	*	00/00/00
ACT	C21005	-.--	1507-0335-020	CAP, UF 3.3, 15V, TANT 20	*	00/00/00
ACT	C21006	-.--	1507-0335-020	CAP, UF 3.3, 15V, TANT 20	*	00/00/00
ACT	C21007	-.--	1507-0335-020	CAP, UF 3.3, 15V, TANT 20	*	00/00/00
ACT	C21008	1.00	1501-0223-005	CAP, UF .022, 50V, DISC 20	*	00/00/00
ACT	C21009	1.00	1506-0102-017	CAP, pF 1000, 100V, NPO 5	*	00/00/00
ACT	CR21001	2.00	4814-0000-002	DIODE, 1N270 ,SIGNAL, 80PRV		00/00/00
ACT	CR21002	-.--	4814-0000-002	DIODE, 1N270 ,SIGNAL, 80PRV		00/00/00
ACT	Q21001	3.00	4801-0000-003	TRANS, 2N2896 ,NPN SW AMP		00/00/00
ACT	Q21002	2.00	4805-0000-003	TRANS, 2N3646 ,NPN HS SW		00/00/00
ACT	Q21003	-.--	4805-0000-003	TRANS, 2N3646 ,NPN HS SW		00/00/00
ACT	Q21004	-.--	4801-0000-003	TRANS, 2N2896 ,NPN SW AMP		00/00/00
ACT	Q21005	-.--	4801-0000-003	TRANS, 2N2896 ,NPN SW AMP		00/00/00
ACT	Q21006	1.00	4807-0000-002	TRANS, 2N3905 ,PNP HS SW		00/00/00
ACT	R21001	5.00	4702-0223-003	RES, 5%, 1/4W 22K OHM	*	00/00/00
ACT	R21002	-.--	4702-0223-003	RES, 5%, 1/4W 22K OHM	*	00/00/00
ACT	R21003	-.--	4702-0223-003	RES, 5%, 1/4W 22K OHM	*	00/00/00
ACT	R21004	-.--	4702-0223-003	RES, 5%, 1/4W 22K OHM	*	00/00/00
ACT	R21005	-.--	4702-0223-003	RES, 5%, 1/4W 22K OHM	*	00/00/00
ACT	R21006	6.00	4702-0224-003	RES, 5%, 1/4W 220K OHM	*	00/00/00
ACT	R21007	-.--	4702-0224-003	RES, 5%, 1/4W 220K OHM	*	00/00/00

ASSY NO.	REVISION	DESCRIPTION	LAST ECN	DATE INC
7010-4931-600	A3	PCB ASSY,COUNTER LOGIC	RC8170	01/17/86

STAT	REF.DES.	QTY	COMP. PART NO.	DESCRIPTION		EFFECTIVE
ACT	R21008	-.--	4702-0224-003	RES, 5%, 1/4W 220K OHM	*	00/00/00
ACT	R21009	-.--	4702-0224-003	RES, 5%, 1/4W 220K OHM	*	00/00/00
ACT	R21010	-.--	4702-0224-003	RES, 5%, 1/4W 220K OHM	*	00/00/00
ACT	R21011	-.--	4702-0224-003	RES, 5%, 1/4W 220K OHM	*	00/00/00
ACT	R21012	4.00	4702-0103-003	RES,5, 1/4W 10K OHM	*	00/00/00
ACT	R21013	5.00	4702-0332-003	RES, 5, 1/4W, 3.3K OHM		00/00/00
ACT	R21014	2.00	4702-0102-003	RES, 5, 1/4W, 1.0K OHM		00/00/00
ACT	R21015	-.--	4702-0332-003	RES, 5, 1/4W, 3.3K OHM		00/00/00
ACT	R21016	-.--	4702-0102-003	RES, 5, 1/4W, 1.0K OHM		00/00/00
ACT	R21017	2.00	4702-0334-003	RES, 5%, 1/4W 330K OHM	*	00/00/00
ACT	R21018	-.--	4702-0334-003	RES, 5%, 1/4W 330K OHM	*	00/00/00
ACT	R21019	-.--	4702-0103-003	RES,5, 1/4W 10K OHM	*	00/00/00
ACT	R21020	-.--	4702-0103-003	RES,5, 1/4W 10K OHM	*	00/00/00
ACT	R21021	1.00	4702-0472-003	RES, 5, 1/4W, 4.7K OHM		00/00/00
ACT	R21022	-.--	4702-0332-003	RES, 5, 1/4W, 3.3K OHM		00/00/00
ACT	R21023	1.00	4702-0271-003	RES, 5, 1/4W, 270 OHM		00/00/00
ACT	R21024	1.00	4702-0152-003	RES, 5, 1/4W, 1.5K OHM		00/00/00
ACT	R21025	1.00	4702-0331-003	RES, 5%, 1/4W 330 OHM	*	00/00/00
ACT	R21026	-.--	4702-0332-003	RES, 5, 1/4W, 3.3K OHM		00/00/00
ACT	R21027	-.--	4702-0103-003	RES,5, 1/4W 10K OHM	*	00/00/00
ACT	R21028	-.--	4702-0332-003	RES, 5, 1/4W, 3.3K OHM		00/00/00
ACT	U21001	5.00	3135-0000-009	IC,700,DISPLAY DECODER/DRIVER		00/00/00
ACT	U21002	-.--	3135-0000-009	IC,700,DISPLAY DECODER/DRIVER		00/00/00
ACT	U21003	-.--	3135-0000-009	IC,700,DISPLAY DECODER/DRIVER		00/00/00
ACT	U21004	-.--	3135-0000-009	IC,700,DISPLAY DECODER/DRIVER		00/00/00
ACT	U21005	-.--	3135-0000-009	IC,700,DISPLAY DECODER/DRIVER		00/00/00

ASSY NO.	REVISION	DESCRIPTION	LAST ECN	DATE INC
7010-4931-600	A3	PCB ASSY,COUNTER LOGIC	RC8170	01/17/86

STAT	REF.DES.	QTY	COMP. PART NO.	DESCRIPTION	EFFECTIVE
ACT	U21006	5.00	3130-0000-011	IC,7475,4-BIT BISTABLE LATCH	00/00/00
ACT	U21007	-.--	3130-0000-011	IC,7475,4-BIT BISTABLE LATCH	00/00/00
ACT	U21008	-.--	3130-0000-011	IC,7475,4-BIT BISTABLE LATCH	00/00/00
ACT	U21009	-.--	3130-0000-011	IC,7475,4-BIT BISTABLE LATCH	00/00/00
ACT	U21010	-.--	3130-0000-011	IC,7475,4-BIT BISTABLE LATCH	00/00/00
ACT	U21011	1.00	3130-0000-002	IC,7402,QUAD 2-INPUT NOR	00/00/00
ACT	U21012	3.00	3130-0000-013	IC,7490A,DECADE COUNTER	00/00/00
ACT	U21013	-.--	3130-0000-013	IC,7490A,DECADE COUNTER	00/00/00
ACT	U21014	-.--	3130-0000-013	IC,7490A,DECADE COUNTER	00/00/00
ACT	U21015	2.00	3130-0000-019	IC,74190,BCD SYN U/D COUNTER	00/00/00
ACT	U21016	-.--	3130-0000-019	IC,74190,BCD SYN U/D COUNTER	00/00/00
ACT	U21017	4.00	3130-0000-001	IC,7400,QUAD 2-INPUT NAND	00/00/00
ACT	U21018	1.00	3132-0000-002	IC,74S112,DUAL JK FLIP-FLOP	00/00/00
ACT	U21019	-.--	3130-0000-001	IC,7400,QUAD 2-INPUT NAND	00/00/00
ACT	U21020	-.--	3130-0000-001	IC,7400,QUAD 2-INPUT NAND	00/00/00
ACT	U21021	-.--	3130-0000-001	IC,7400,QUAD 2-INPUT NAND	00/00/00

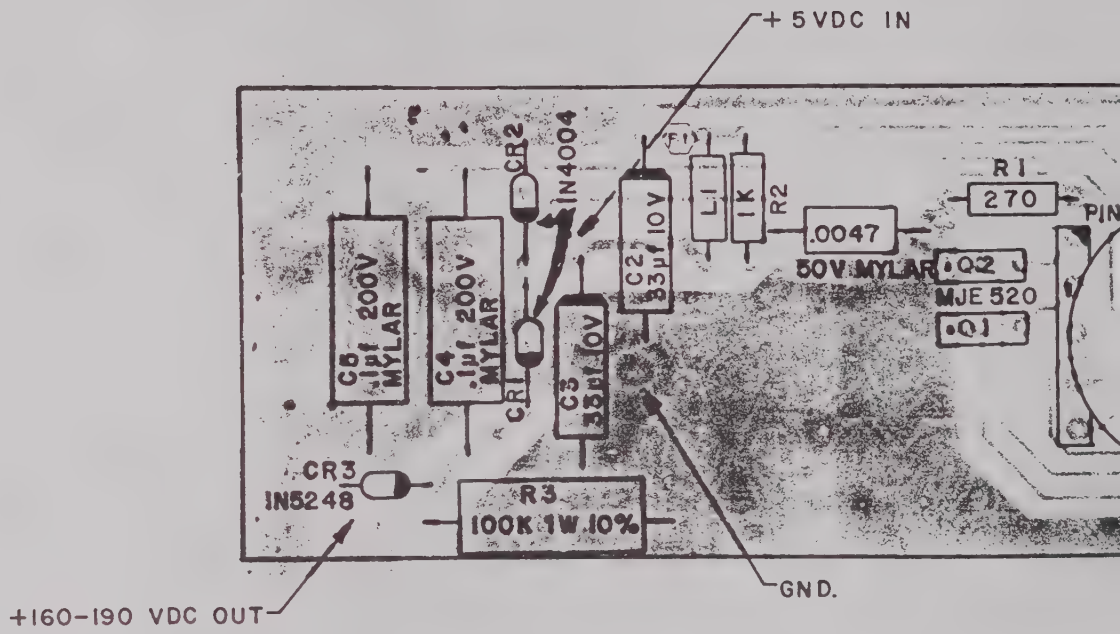

NOTES

1. ALL RESISTORS ARE 1/4W, 10% TOL. EXCEPT AS NOTED.
2. ALL CAPACITORS ARE IN µf EXCEPT AS NOTED.
3. COMPONENT LEADS MAY EXTEND .04 TO .06 BEYOND BOTTOM OF BOARD AFTER SOLDERING.
4. MAXIMUM HEIGHT OF COMPONENTS TO BE .65 TO .70 FROM COMPONENT SIDE OF BOARD.

DATE	REV	CHANGE	APP'D
10-4-77	C	INC. ECN #2401 LVC BJP	MW
4-3-78	D	INC. ECN #2857 & 2917 LVC	WW
6-2-79	E	UPDATED REV. LETTER 3313 RLD	M
8-2-79	F	REDRAWN FOR UPDATED A.W. RLD	M
1-23-84	F-1	INC R.C. 5957 (R.L.)	TE
1-28-87	G	INC RC 9497 AO	VLH
1-6-88	H	INC RC 10429 RB	VLH

REF DWG

SCHEM 0000-0816-700

P.C. BD. 1700-0953-500 "G"

PRODUCTION PRINT
DEC 27 1991

ITEM	REQ'D	PART NO.	DESCRIPTION

LIST OF MATERIALS

ATC 600A	1	08-145	TOLERANCES UNLESS OTHERWISE SPECIFIED ALL DIMENSIONS APPLY AFTER FINISH DECIMALS: .xx = ± .010 .xxx = ± .005 ANGLES: ± 1/2° FRACTIONS: ± 1/64 SURFACE ROUGHNESS 125 REMOVE ALL BURRS	DRAWN LD 9-1-77 CHECKED BJP 9-17-77 APPROVED MW 9-20-77	-IFI, INC- WICHITA, KANSAS
MODEL	QT'Y	NEXT ASS'Y			TITLE 200 VOLT POWER SUPPLY P.C. BD. ASS'Y 2-08-158
APPLICATION			MATERIAL	SIZE B	PART NUMBER 7010-0815-800 REV H.
			FINISH	SCALE 2:1	WEIGHT — SHEET 1 OF 1

(1A)

ASSY NO.	REVISION	DESCRIPTION	LAST ECN	DATE INC
7010-0815-800	H	200V PWR SUPPLY BD ASSY 600	10429	12/30/87

STAT	REF.DES.	QTY	COMP. PART NO.	DESCRIPTION	EFFECTIVE
ACT		1.00	1700-0953-500	BD PC POWER SUPPLY 1	00/00/00
ACT	C01	1.00	1503-0472-008	CAP,PF 4700, 50V,PE, 20	00/00/00
ACT	C02	2.00	1507-0336-023	CAP,UF 33, 10V,TANT, 20	00/00/00
ACT	C03	-.--	1507-0336-023	CAP,UF 33, 10V,TANT, 20	00/00/00
ACT	C04	2.00	1503-0104-009	CAP,uF .10 200V, PE 5 *	00/00/00
ACT	C05	-.--	1503-0104-009	CAP,uF .10 200V, PE 5 *	00/00/00
ACT	CR01	2.00	4815-0000-002	DIODE, 1N4004 ,RECT, 400V, 1A	00/00/00
ACT	CR02	-.--	4815-0000-002	DIODE, 1N4004 ,RECT, 400V, 1A	00/00/00
ACT	CR03	1.00	4818-0000-002	DIODE, 1N5248B ,ZENER, 18V,.5W	00/00/00
ACT	L01	1.00	1801-0229-001	IND, 2.2 UH,.4 OHM,1025-28	00/00/00
ACT	Q01	2.00	4811-0000-004	TRANS,MJE520 ,	00/00/00
ACT	Q02	-.--	4811-0000-004	TRANS,MJE520 ,	00/00/00
ACT	R01	1.00	4702-0271-003	RES, 5, 1/4W, 270 OHM	00/00/00
ACT	R02	1.00	4702-0102-003	RES, 5, 1/4W, 1.0K OHM	00/00/00
ACT	R03	1.00	4704-0104-003	RES, 5, 1W, 100K OHM	00/00/00
ACT	T01	1.00	5604-0000-001	TRANSFORMER 326-0142 ALLADIN	00/00/00

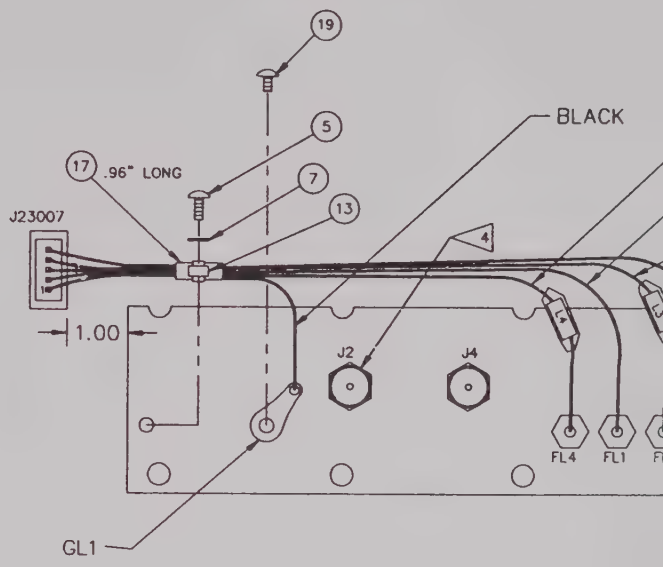

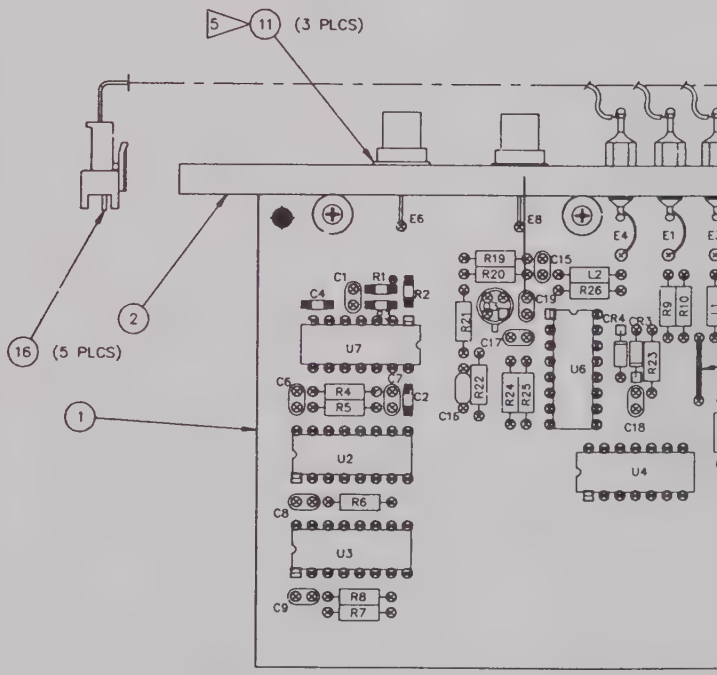

WIRE RUNNING LIST			
FROM	TO	WIRE SPECS	COLOR
GL23001	J23007-1	26GAx4"LG TFE	BLACK
FL23002	J23007-2	26GAx5 7/16"LG TFE	ORN
FL23001	J23007-3	26GAx5"LG TFE	WHT
FL23003	J23007-4	26GAx5 7/16"LG TFE	WHT/BRN
FL23004	J23007-5	26GAx4 9/16"LG TFE	WHT/BLK

F | G | H | J | K | L

DATE	REV	CHANGE	APVD
5/23/89	A	PRCD REL PER ECN 12133	SLR
3/5/90	A1	INC ENC 13153 AO	BP
8/15/90	A2	INC RC 13516 JR	BP
9/13/90	A3	INC ECN 13637 AO	BP
11/8/90	A4	INC RC 13808 AO	BP

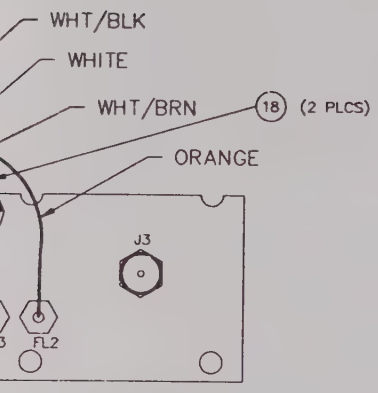

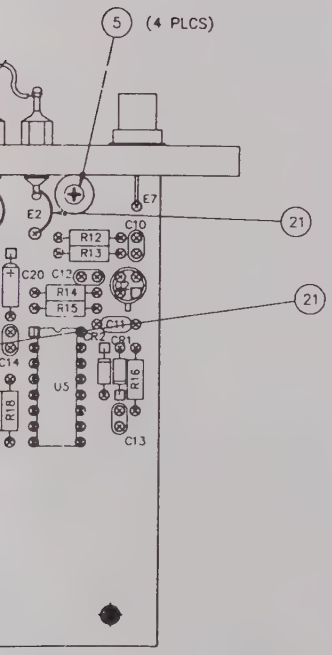

NOTES:

1. ALL REFERENCE DESIGNATORS CARRY AN ASSIGNED DESIGNATOR SERIES, THIS DWG. CARRIES SERIES 23000 (i.e., R1 IS 23001).
2. LAST REF NUMBER USED: C20, FL4, J7, CR4, L4, Q3, R26, U7, E8, GL1.
3. REF NUMBERS NOT USED: J5, J6, U1, C5, J1, C3, Q1, R11.

4 TORQUE TO 15 INCH POUNDS J2, J3, J4.

5 USE FLAT WASHER ONLY.

6. REF SCHEM 0000-4913-900.

	IFR SYSTEMS INC. 10200 West York St., Wichita, Kansas 67215
DRAWN J RIDDLE 4/26/89	TITLE PC BD ASS'Y, PRESCALER, RD301
CHECKED SN RICKE 5/1/89	
APPROVED S. REESE 5/30/90	SIZE D; DWG. NO. 7010-4932-900; REV A4
	SCALE 2:1; DO NOT SCALE; FSCM 51190; SHEET 1 OF 1

PRINT DATE 06/17/92 BILL OF MATERIAL LISTED BY REF. DESIG. PAGE 1 ST

ASSY NO.	REVISION	DESCRIPTION	LAST ECN	DATE INC
7010-4932-900	A4	PCB ASSY,RD-301 PRESCALER	13808	11/06/90

STAT	REF.DES.	QTY	COMP. PART NO.	DESCRIPTION	EFFECTIVE
ACT		.00	0000-4913-900	SCHEM,RD301 PRESCALER	00/00/00
ACT		.33	6003-0000-001	WIRE,HOOK,TFE,26GA, 7S,BLACK	00/00/00
ACT		.45	6003-0000-004	WIRE,HOOK,TFE,26GA, 7S,ORANGE	00/00/00
ACT		.42	6003-0000-010	WIRE,HOOK,TFE,26GA, 7S,WHITE	00/00/00
ACT		.38	6003-0000-011	WIRE,HOOK,TFE,26GA, 7S,WHT/BLK	00/00/00
ACT		.45	6003-0000-012	WIRE,HOOK,TFE,26GA, 7S,WHT/BRN	00/00/00
ACT	*01	1.00	1700-4922-900	PC BD RD-301 PRESCALER	00/00/00
ACT	*02	1.00	2506-4953-500	PLATE,MOUNTING,PRESCALER	00/00/00
ACT	*05	4.00	2803-0313-006	SCREW,4-40 X 5/16 PPHM	00/00/00
ACT	*07	1.00	2840-0000-003	WASHER,LOCK,INT TOOTH,4	00/00/00
ACT	*11	3.00	2840-7600-208	WASHER,ALUM,.380D,.250ID,.020T	00/00/00
ACT	*13	1.00	2109-0000-007	CLAMP CABLE TYRAP TY34M.8	00/00/00
ACT	*16	5.00	2114-9001-001	CONTACT PIN26-22GA.SYM001T0.6*	00/00/00
ACT	*17	.10	6012-0106-200	TUBING,PVC-105,10 AWG,BLACK	00/00/00
ACT	*18	.10	6010-0125-100	TUBING,HS, 1/8 ID,CLEAR	87/03/25
ACT	*19	1.00	2803-0188-006	SCREW,4-40 X 3/16 PPHM	00/00/00
ACT	*21	.00	1050-0000-073	WIRE,BUS,TINNED COPPER,22GA	00/00/00
ACT	C23001	1.00	1506-0050-017	CAP,pF 5.6 100V NPO 5 *	00/00/00
ACT	C23002	2.00	1523-0000-002	CAP,PF 1800, 50V,CHIP,X7R	00/00/00
ACT	C23003	7.00	0002-0000-000	*** REF DESIG NOT USED ***	00/00/00
ACT	C23004	-.--	1523-0000-002	CAP,PF 1800, 50V,CHIP,X7R	00/00/00
ACT	C23005	-.--	0002-0000-000	*** REF DESIG NOT USED ***	00/00/00
ACT	C23006	8.00	1506-0222-017	CAP,pF 2200 50V NPO *	00/00/00
ACT	C23007	-.--	1506-0222-017	CAP,pF 2200 50V NPO *	00/00/00
ACT	C23008	-.--	1506-0222-017	CAP,pF 2200 50V NPO *	00/00/00
ACT	C23009	-.--	1506-0222-017	CAP,pF 2200 50V NPO *	00/00/00

ASSY NO.	REVISION	DESCRIPTION	LAST ECN	DATE INC
7010-4932-900	A4	PCB ASSY,RD-301 PRESCALER	13808	11/06/90

STAT	REF.DES.	QTY	COMP. PART NO.	DESCRIPTION	EFFECTIVE
ACT	C23010	2.00	1506-0101-017	CAP,pF 100, 100V NPO 5 *	00/00/00
ACT	C23011	2.00	1501-0103-005	CAP,UF .010, 50V,DISC, 10	00/00/00
ACT	C23012	2.00	1506-0102-017	CAP, pF 1000, 100V, NPO 5 *	00/00/00
ACT	C23013	-.--	1506-0222-017	CAP,pF 2200 50V NPO *	00/00/00
ACT	C23014	-.--	1506-0222-017	CAP,pF 2200 50V NPO *	00/00/00
ACT	C23015	-.--	1506-0101-017	CAP,pF 100, 100V NPO 5 *	00/00/00
ACT	C23016	-.--	1501-0103-005	CAP,UF .010, 50V,DISC, 10	00/00/00
ACT	C23017	-.--	1506-0102-017	CAP, pF 1000, 100V, NPO 5 *	00/00/00
ACT	C23018	-.--	1506-0222-017	CAP,pF 2200 50V NPO *	00/00/00
ACT	C23019	-.--	1506-0222-017	CAP,pF 2200 50V NPO *	00/00/00
ACT	C23020	1.00	1507-0105-118	CAP,UF 1.0, 35V,TANT, 5	00/00/00
ACT	CR23001	4.00	4816-0000-001	DIODE,5082-2800,S BAR, 70VBR	00/00/00
ACT	CR23002	-.--	4816-0000-001	DIODE,5082-2800,S BAR, 70VBR	00/00/00
ACT	CR23003	-.--	4816-0000-001	DIODE,5082-2800,S BAR, 70VBR	00/00/00
ACT	CR23004	-.--	4816-0000-001	DIODE,5082-2800,S BAR, 70VBR	00/00/00
ACT	FL23001	2.00	5801-0000-006	FILTER,EMI/RFI 1500pF 8-32DIA*	00/00/00
ACT	FL23002	-.--	5801-0000-006	FILTER,EMI/RFI 1500pF 8-32DIA*	00/00/00
ACT	FL23003	2.00	1526-0000-006	CAP,PF 100, 200V,FEEDTHRU	00/00/00
ACT	FL23004	-.--	1526-0000-006	CAP,PF 100, 200V,FEEDTHRU	00/00/00
ACT	GL23001	1.00	2850-0000-031	LUG,GND,4	00/00/00
ACT	J23001	-.--	0002-0000-000	*** REF DESIG NOT USED ***	00/00/00
ACT	J23002	3.00	2123-0000-029	CONN RF SUB AEP 60-0911-090	00/00/00
ACT	J23003	-.--	2123-0000-029	CONN RF SUB AEP 60-0911-090	00/00/00
ACT	J23004	-.--	2123-0000-029	CONN RF SUB AEP 60-0911-090	00/00/00
ACT	J23005	-.--	0002-0000-000	*** REF DESIG NOT USED ***	00/00/00
ACT	J23006	-.--	0002-0000-000	*** REF DESIG NOT USED ***	00/00/00

ASSY NO.	REVISION	DESCRIPTION	LAST ECN	DATE INC
7010-4932-900	A4	PCB ASSY,RD-301 PRESCALER	13808	11/06/90

STA	REF.DES.	QTY	COMP. PART NO.	DESCRIPTION	EFFECTIVE
ACT	J23007	1.00	2115-9001-005	CONN,RECT.098 RCPT 5-P,SMR05VB	00/00/00
ACT	L23001	4.00	1801-0229-001	IND, 2.2 UH,.4 OHM,1025-28	00/00/00
ACT	L23002	-.--	1801-0229-001	IND, 2.2 UH,.4 OHM,1025-28	00/00/00
ACT	L23003	-.--	1801-0229-001	IND, 2.2 UH,.4 OHM,1025-28	00/00/00
ACT	L23004	-.--	1801-0229-001	IND, 2.2 UH,.4 OHM,1025-28	00/00/00
ACT	Q23001	-.--	0002-0000-000	*** REF DESIG NOT USED ***	00/00/00
ACT	Q23002	2.00	4809-0100-100	TRANS,55100 NPN HF AMP *	00/00/00
ACT	Q23003	-.--	4809-0100-100	TRANS,55100 NPN HF AMP *	00/00/00
ACT	R23001	1.00	4722-3929-001	RES, 1% 1/8W 39.2 OHM *	00/00/00
ACT	R23002	2.00	4722-1500-001	RES, 1% 1/8W 150 OHM *	00/00/00
ACT	R23003	-.--	4722-1500-001	RES, 1% 1/8W 150 OHM *	00/00/00
ACT	R23004	3.00	4702-0471-003	RES, 5, 1/4W, 470 OHM	00/00/00
ACT	R23005	4.00	4702-0680-003	RES, 5%, 1/4W, 68 OHM *	00/00/00
ACT	R23006	7.00	4702-0681-003	RES, 5, 1/4W, 680 OHM	00/00/00
ACT	R23007	-.--	4702-0681-003	RES, 5, 1/4W, 680 OHM	00/00/00
ACT	R23008	-.--	4702-0681-003	RES, 5, 1/4W, 680 OHM	00/00/00
ACT	R23009	1.00	4702-0100-003	RES, 5, 1/4W, 10 OHM *	00/00/00
ACT	R23010	1.00	4702-0152-003	RES, 5, 1/4W, 1.5K OHM	00/00/00
ACT	R23012	-.--	4702-0680-003	RES, 5%, 1/4W, 68 OHM *	00/00/00
ACT	R23013	2.00	4702-0473-003	RES, 5%, 1/4W 47K OHM *	00/00/00
ACT	R23014	-.--	4702-0471-003	RES, 5, 1/4W, 470 OHM	00/00/00
ACT	R23015	2.00	4702-0101-003	RES, 5, 1/4W, 100 OHM	00/00/00
ACT	R23016	2.00	4702-0470-003	RES, 5, 1/4W, 47 OHM	00/00/00
ACT	R23017	-.--	4702-0681-003	RES, 5, 1/4W, 680 OHM	00/00/00
ACT	R23018	-.--	4702-0681-003	RES, 5, 1/4W, 680 OHM	00/00/00
ACT	R23019	-.--	4702-0680-003	RES, 5%, 1/4W, 68 OHM *	00/00/00

ASSY NO.	REVISION	DESCRIPTION	LAST ECN	DATE INC
7010-4932-900	A4	PCB ASSY,RD-301 PRESCALER	13808	11/06/90

STAT	REF.DES.	QTY	COMP. PART NO.	DESCRIPTION	EFFECTIVE
ACT	R23020	-.--	4702-0473-003	RES, 5%, 1/4W 47K OHM *	00/00/00
ACT	R23021	-.--	4702-0471-003	RES, 5, 1/4W, 470 OHM	00/00/00
ACT	R23022	-.--	4702-0101-003	RES, 5, 1/4W, 100 OHM	00/00/00
ACT	R23023	-.--	4702-0470-003	RES, 5, 1/4W, 47 OHM	00/00/00
ACT	R23024	-.--	4702-0681-003	RES, 5, 1/4W, 680 OHM	00/00/00
ACT	R23025	-.--	4702-0681-003	RES, 5, 1/4W, 680 OHM	00/00/00
ACT	R23026	-.--	4702-0680-003	RES, 5%, 1/4W, 68 OHM *	00/00/00
ACT	U23001	-.--	0002-0000-000	*** REF DESIG NOT USED ***	00/00/00
ACT	U23002	2.00	3213-1200-900	IC,12009,OR12509,D/5/6,PRESCL.	00/00/00
ACT	U23003	-.--	3213-1200-900	IC,12009,OR12509,D/5/6,PRESCL.	00/00/00
ACT	U23004	1.00	3131-0000-044	IC,74LS00,QUAD 2-INPUT NAND	00/00/00
ACT	U23005	2.00	3134-0000-017	IC,12013,D/10/11 PRESCALER	00/00/00
ACT	U23006	-.--	3134-0000-017	IC,12013,D/10/11 PRESCALER	00/00/00
ACT	U23007	1.00	3213-0861-100	IC,8611B,1.3-1.5 GHZ N/4	00/00/00

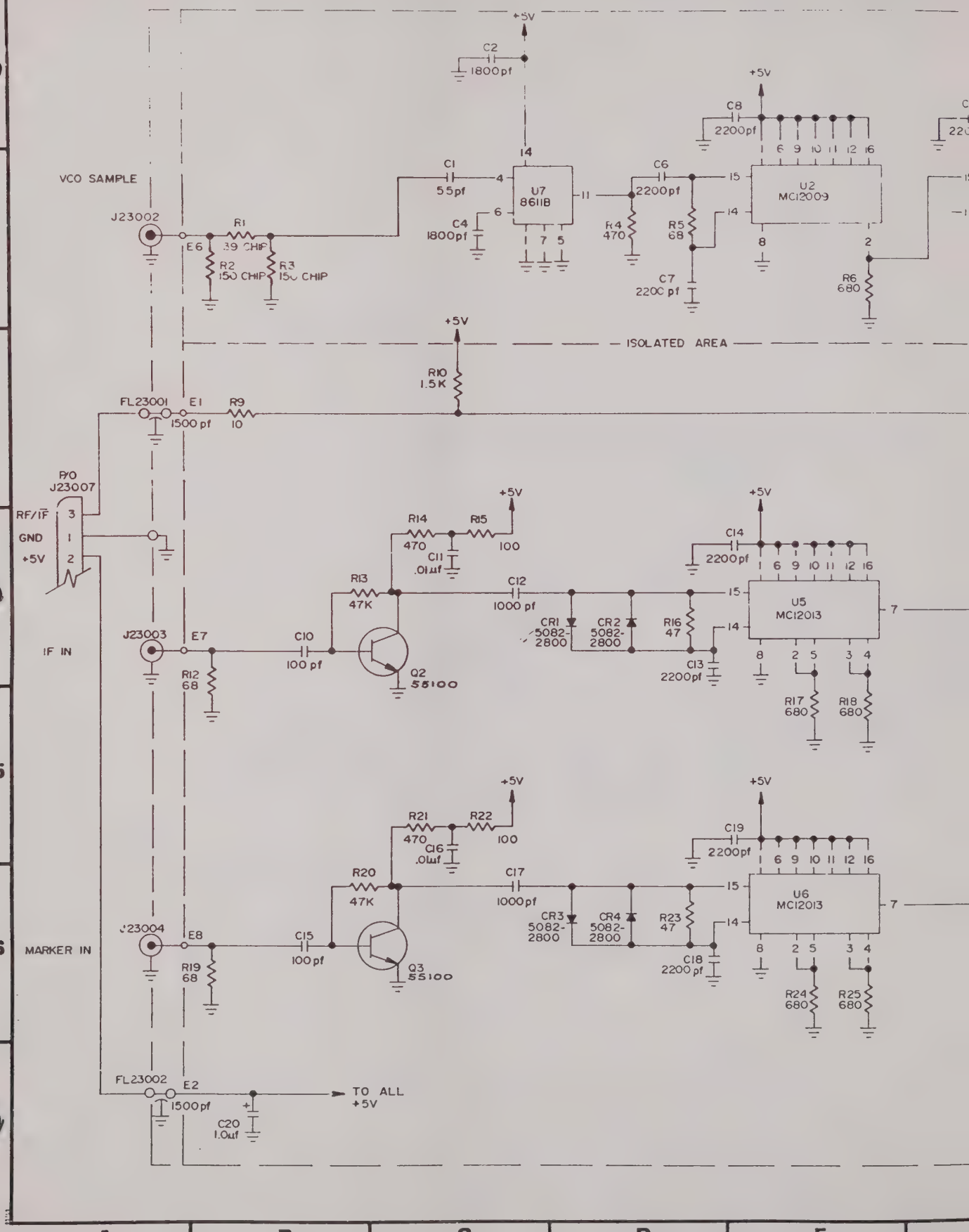
A
B
C
D
E
2
3
5
6
+5V
C2
1800pf
C1
55pf
U7
8611B
C4
1800pf
C8
2200pf
C6
2200pf
U2
MC12009
R4
470
R5
68
C7
2200 pf
R6
680
VCO SAMPLE
J23002
E6
R1
39 CHIP
R2
150 CHIP
R3
150 CHIP
ISOLATED AREA
R10
1.5K
FL23001
E1
1500 pf
R9
10
P/O
J23007
RF/IF
GND
+5V
R14
470
R15
100
C11
.01µf
R13
47K
C12
1000 pf
CR1
5082-
2800
CR2
5082-
2800
R16
47
C13
2200pf
C14
2200pf
U5
MC12013
R17
680
R18
680
J23003
E7
IF IN
C10
100 pf
R12
68
Q2
55100
R21
470
R22
100
C16
.01µf
R20
47K
C17
1000pf
CR3
5082-
2800
CR4
5082-
2800
R23
47
C18
2200 pf
C19
2200pf
U6
MC12013
R24
680
R25
680
J23004
E8
MARKER IN
C15
100 pf
R19
68
Q3
55100
FL23002
E2
1500pf
C20
1.0uf
TO ALL
+5V

DATE	REV	CHANGE	APVD
5-3-89	A	PROD REL ECN 12133	
7-96	A	INC ECN 13637 pg 2	AD

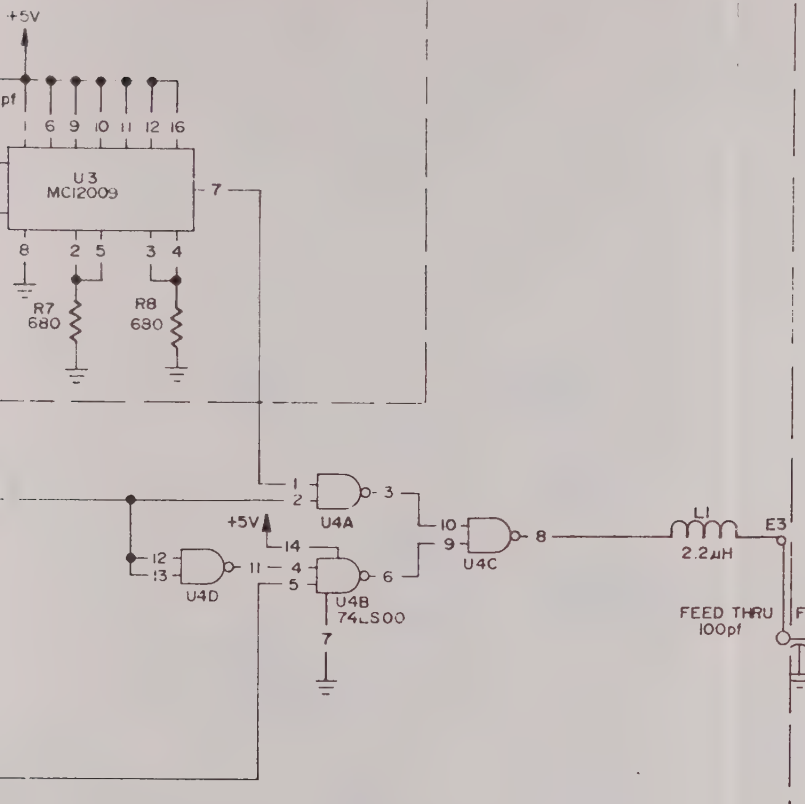

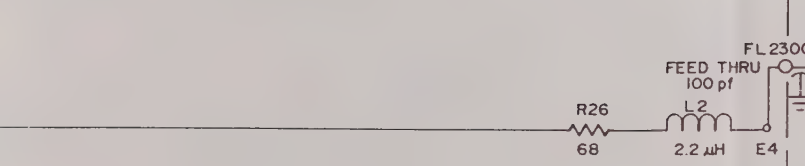

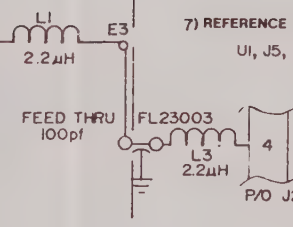

STANDARDS:

1) ALL REFERENCE DESIGNATORS CARRY AN ASSIGNED DESIGNATOR SERIES. THIS DRAWING CARRIES SERIES 23XXX ___ (ei. R1 IS R23001 ___).

2) ALL RESISTORS ARE 1/4 W, 5 %, UNLESS OTHERWISE NOTED.

3) ALL RESISTANCE IS EXPRESSED IN OHMS.

4) ALL CAPACITANCE IS EXPRESSED IN MICRO FARADS. UNLESS OTHERWISE NOTED.

5) ALL INDUCTANCE IS EXPRESSED IN MICRO HENRYS. UNLESS OTHERWISE NOTED.

6) LAST REFERENCE DESIGNATOR NUMBER USED.

C20	L4	E8
CR4	Q3	GL1
FL4	R26	
J7	U7	

7) REFERENCE DESIGNATORS NOT USED:

U1, J5, J6, C5, J1, C3, E5, Q1, R11.

PRODUCTION PRINT

DRAWN: S. PERKINS	DATE: 5-2-89	IFR SYSTEMS INC
CHECKED:	DATE: 5/5/89	TITLE: PRESCALER - CIRCUIT SCHEMATIC
APPROVED:	DATE: 5-5-89	SIZE: D DWG. NO. 0000-4913-900 REV: A-1
SCALE: DO AS NOTED	DO NOT SCALE THIS DRAWING	FSCM CODE: 37180 SHEET 1 OF 1

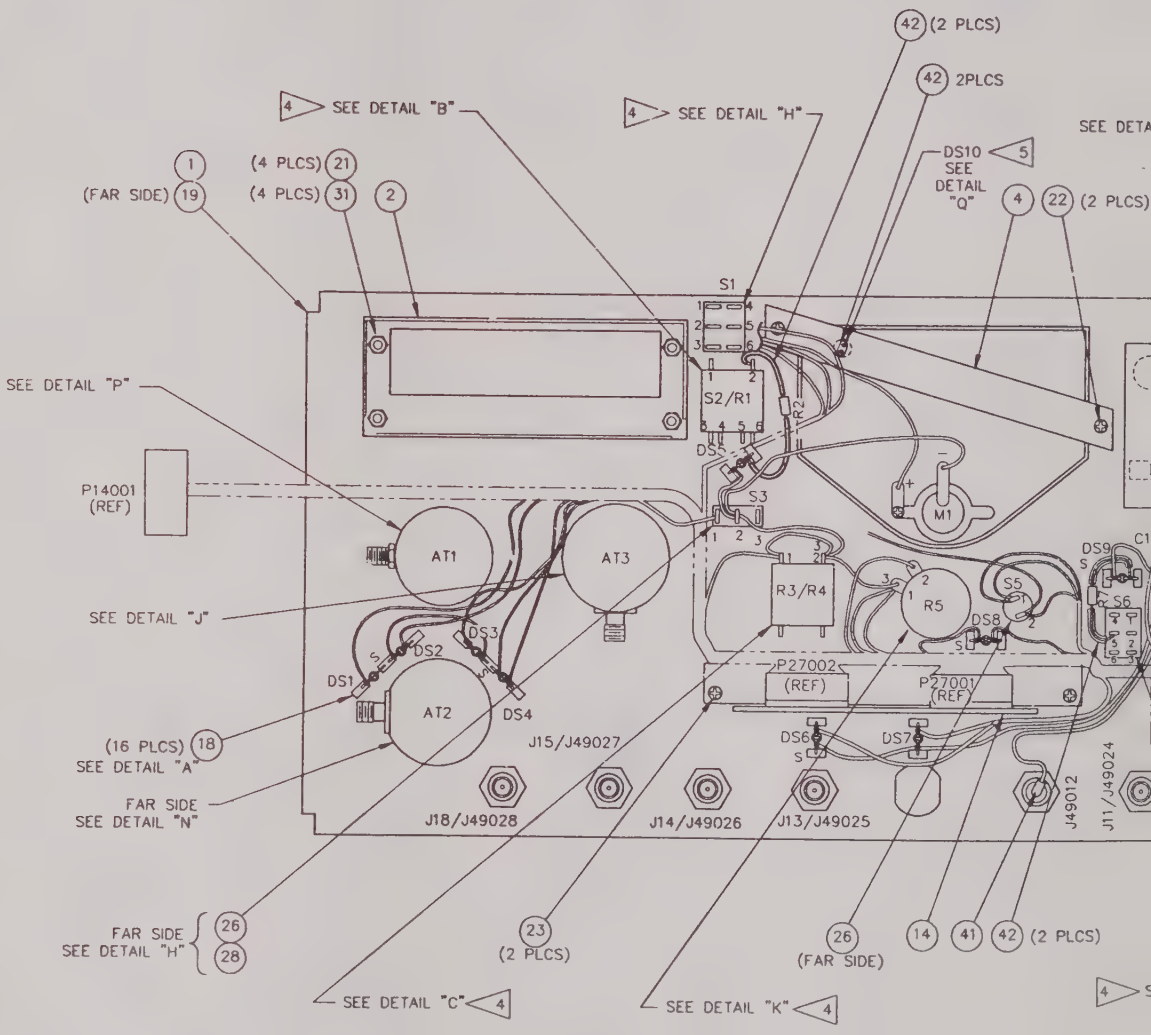
42 (2 PLCS)
42 2PLCS
4 SEE DETAIL "B"
4 SEE DETAIL "H"
SEE DETA
DS10 5 SEE DETAIL "Q"
1 (FAR SIDE) 19
(4 PLCS) 21
(4 PLCS) 31
2
4 22 (2 PLCS)
S1
S2/R1
R2
DS5
S3
M1
SEE DETAIL "P"
P14001 (REF)
AT1
AT3
SEE DETAIL "J"
R3/R4
R5
S5
S6
DS8
DS9
C1
DS1
DS2
DS3
DS4
AT2
P27002 (REF)
P27001 (REF)
(16 PLCS) 18 SEE DETAIL "A"
FAR SIDE SEE DETAIL "N"
J15/J49027
DS6
DS7
J18/J49028
J14/J49026
J13/J49025
J49012
J11/J49024
FAR SIDE SEE DETAIL "H" 26 28
23 (2 PLCS)
26 (FAR SIDE)
14 41 42 (2 PLCS)
SEE DETAIL "C" 4
SEE DETAIL "K" 4
4 S

DATE	REV	CHANGE	APVD
01-20-92	A	DESIGN RELEASE	SL
03-23-92	A-1	INC REF L113 AO	SL
07-22-92	A-2	INC REF L137 AO	SL
08-12-92	A-3	INC REF L141 AO	SL

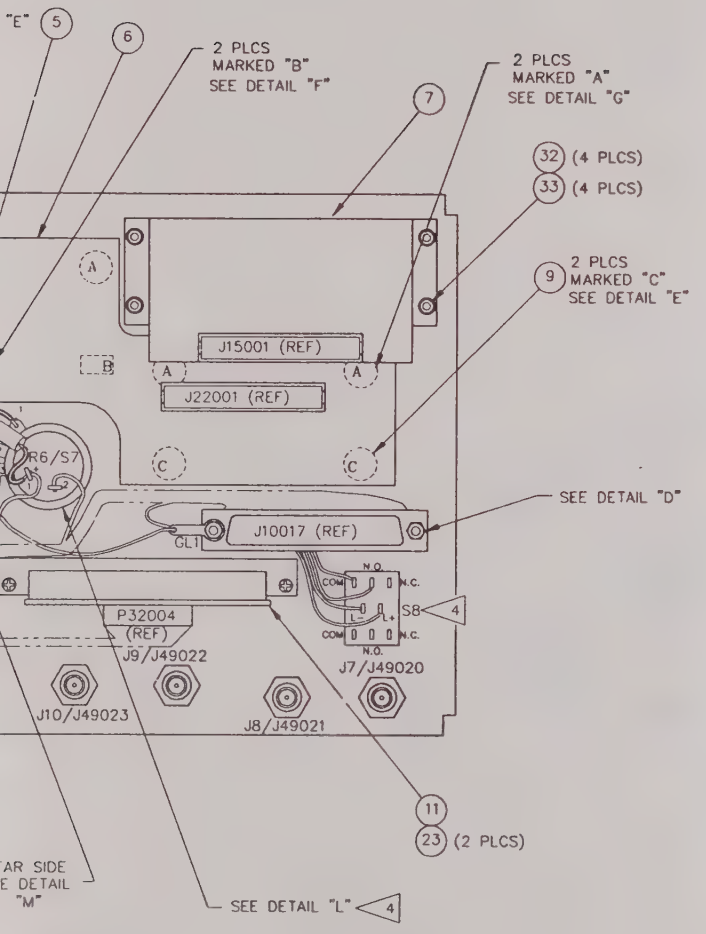

NOTES:

1. ALL REFERENCE DESIGNATORS CARRY AN ASSIGNED DESIGNATOR SERIES, THIS ASS'Y CARRIES SERIES 10000 (i.e., R1 IS R10001).
2. ITEM 20 (SPACER) MAY REQUIRE SELECTIVE "FITTING".
3. REFERENCE SCHEMATIC: 0000-9040-100
4. REFERENCE SHT 3 (WIRE RUNNING LIST) FOR CONNECTIONS.
5. BEFORE INSTALLING M10001 TO ITEM 1, MOUNT LED FLUSH WITH BACK SIDE OF METER AND ADHERE AS SHOWN (DETAIL "Q").

DRAWN / DATE	SIGLER 7-30-91
CHECKED / DATE	J. SCHMIDT 12-91
APPROVED / DATE	P. HARRIS 12-91

IFR SYSTEMS INC.
3000 West York St., Wichita, Kansas 67213

MECHANICAL ASSEMBLY, FRONT PANEL, RD-301A

SIZE	DWG. NO.	REV
D	7005-9040-100	A3

SCALE: N.T.S. DO NOT SCALE CAGE 51190 SHEET 1 OF 4

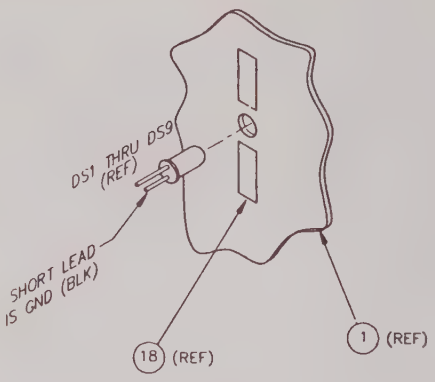

DETAIL "A"
N.T.S.

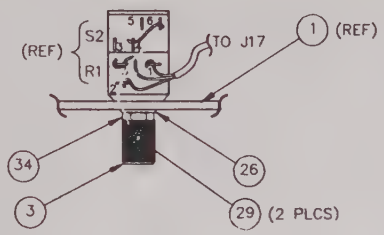

DETAIL "B"
BOTTOM VIEW–N.T.S.

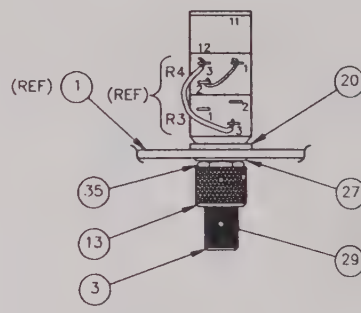

DETAIL "C"
N.T.S.

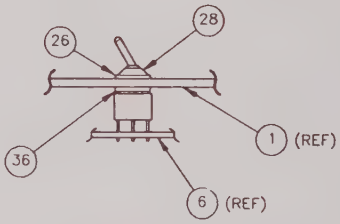

DETAIL "F"
TOP VIEW–N.T.S.

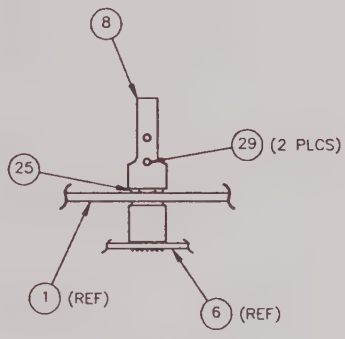

DETAIL "G"
TOP VIEW–N.T.S.

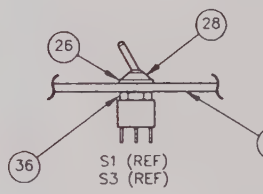

DETAIL "H"
TOP VIEW–N.T.S.

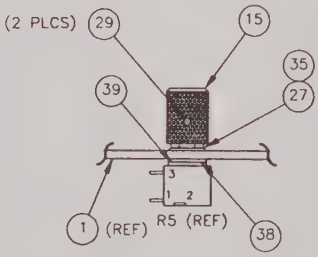

DETAIL "K"
TOP VIEW–N.T.S.

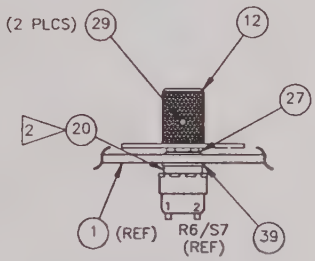

DETAIL "L"
TOP VIEW–N.T.S.

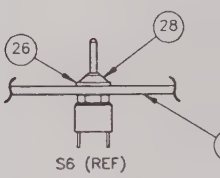

DETAIL "M"
TOP VIEW–N.T.S.

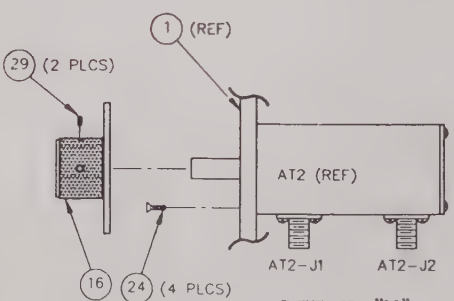

DETAIL "N"
N.T.S.

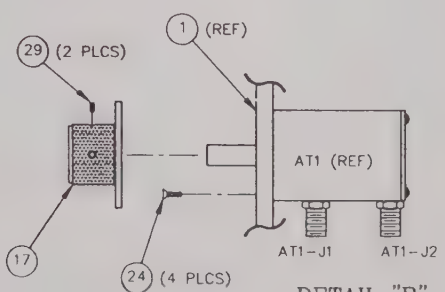

DETAIL "P"
N.T.S.

F G H J K L

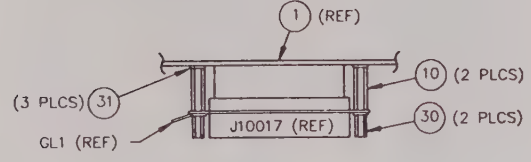

DETAIL "D"
N.T.S.

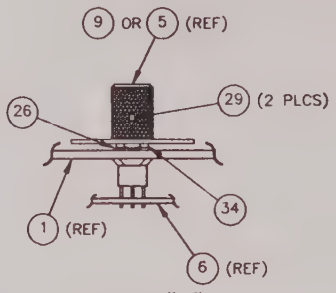

DETAIL "E"
TOP VIEW-N.T.S.

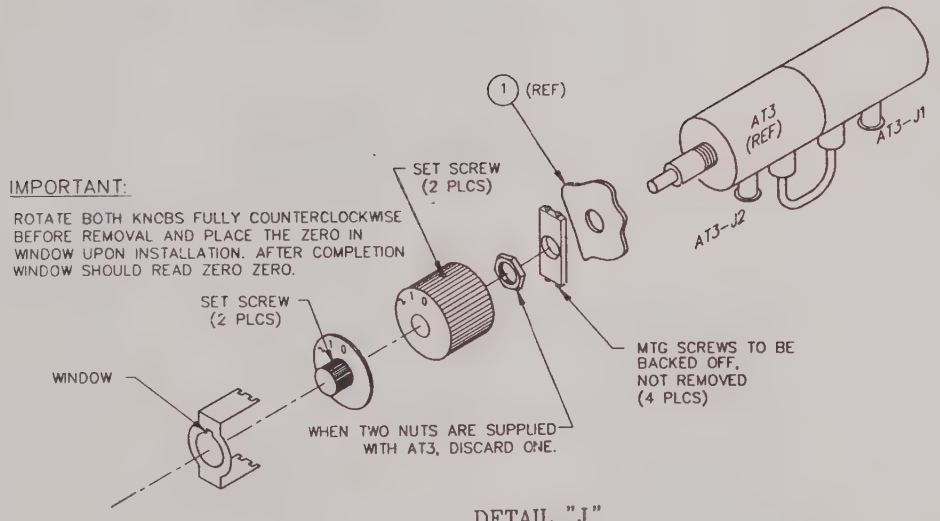

DETAIL "J"
N.T.S.

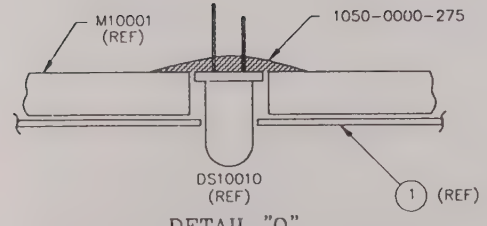

DETAIL "Q"
N.T.S.

	IFR SYSTEMS INC	
DRAWN SIGLER 7-30-91	TITLE MECHANICAL ASSEMBLY, FRONT PANEL, RD-301A	
CHECKED J. SCHMIDT 12-91		
APPROVED P. HARRIS 12-91	SIZE D / DWG. NO. 7005-9040-100	REV A3
	SCALE N.T.S. / DO NOT SCALE / CAGE 51190	SHEET 2 OF 4

WIRE RUNNING LIST

LINE Nº	FROM TERMINAL	FROM NOTES	TO TERMINAL	TO NOTES	WIRE COLOR	WIRE AWG	WIRE LG	WIRE NOTES
1	DS10002-SHORT		DS10003-SHORT		BLK	26	2.5	
2	DS10004-SHORT		R10005-3	(3)	BLK	26	6.0	
3	DS10005-LONG		R10002	390 OHM	SLEEVE			
4	DS10005-SHORT	(2)	S10003-2	(3)	BLK	26	2.0	
5	DS10005-SHORT	(2)	S10001-5		BLK	26	3.0	
6	DS10006-SHORT		DS10007-SHORT	(2)	BLK	26	2.0	
7	DS10007-SHORT	(2)	R10006-3	(4)	BLK	26	4.5	
8	DS10009-SHORT	(2)	R10006-3	(4)	BLK	26	2.0	
9	DS10009-SHORT	(2)	R10005-3	(3)	BLK	26	4.0	
10	DS10009-LONG		R10007	390 OHM	SLEEVE			
11	R10007	SLEEVE	S10006-5					
12	DS10010-LONG		S10002-6	(2)	RED	26	4.0	
13	M10001 +		S10001-2		WHT	26	4.0	
14	M10001 −		S10003-2	(3)	BLK	26	4.0	
15	S10001-4		NC					
16	S10002-2		R10002	SLEEVE				
17	S10002-3		NC					
18	S10002-4	C(3)	S10005-2	(3)	RED	26	5.0	
19	S10002-4	(3)	S10002-6	(2)	RED	26	2.0	
20	S10002-5		NC					
21	S10003-2	(3)	R10004-2	(3)	BLK	26	2.5	
22	S10003-3		NC					
23	S10005-2	(3)	S10006-6	(3)	RED	26	2.0	
24	S10006-1		NC					
25	S10006-4		NC					
26	S10007-1	(2)	C10001 +	33UF 20V				
27	S10007-1	(2)	J49012		WHT	26	5.0	
28	S10008-L(−)		GL10001	(3)	BLK	26	4.0	
29	S10008-L(+)		S10006-6		RED	26	8.0	
30	NOT USED							
31	S10008-N.O.	(BOT)	NC					
32	S10008-COM	(BOT)	NC					
33	S10008-N.C.	(BOT)	NC					
34	R10003-1		R10005-1	(3)	VIO	26	2.5	
35	R10003-3		R10004-3		WHT	26	2.0	
36	R10004-1	(2)	R10004-2	(3)	BLK	26	2.0	
37	R10004-2	(3)	R10005-3	(3)	BLK	26	3.0	
38	R10006-1		C10001 −	33UF 20V	SLEEVE			
39	R10006-3	(4)	GL10001	(3)	BLK	26	3.5	
40	J10017-1		S10008-N.O.	(TOP)	GRY	22	6.96	
41	J10017-2		S10008-COM	(TOP)	WHT	22	6.96	
42	J10017-3		NC					
43	J10017-4		DS10010-SHORT		WHT/BLK	26	17.0	
44	J10017-5		GL10001	(3)	BLK	22	4.5	
45	J10017-6		P27001-8		YEL	26	13.5	
46	J10017-7		P32004-4	(2)	ORN	22	10.0	
47	J10017-8	+12V	S10005-2	(3)	RED	26	8.52	
48	J10017-9		R10005-1	(3)	VIO	26	12.0	
49	J10017-10		S10001-6		WHT/GRN	26	15.48	
50	J10017-11		R10001-3		WHT	26	15.0	
51	J10017-12		R10001-2		WHT/BLU	26	15.0	
52	J10017-13		R10001-1		WHT/GRY	26	15.0	
53	J10017-14		S10002-1		WHT/VIO	26	15.48	
54	J10017-15		S10001-1		WHT/YEL	26	15.48	
55	J10017-16		S10006-3		WHT/RED	26	8.52	
56	J10017-17		S10006-2		WHT/GRN	26	8.52	
57	J10017-18		R10003-2		WHT/GRY	26	15.0	
58	J10017-19		S10001-3		WHT/ORN	26	15.96	
59	J10017-20		S10005-1	(2)	WHT/RED	26	9.0	
60	J10017-21		R10005-2		WHT/VIO	26	12.0	
61	J10017-22		R10006-2		WHT/BLU	26	8.52	
62	J10017-23		P27001-1	(2)	WHT/BRN	26	13.5	
63	J10017-24		P27001-7		WHT/YEL	26	13.5	
64	J10017-25		P27001-10		WHT/VIO	26	13.5	
65	J10017-26		P27001-5		WHT/ORN	26	13.5	
66	J10017-27	CNTR COND	P14001-6	CNTR COND	RG178		21.0	FLEX COAX
67	J10017-28	(2)	J10017-27 SHLD	**	BLK	26	3.0	
68	J10017-28	(2)	J10017-29 SHLD	**				
69	J10017-29	CNTR COND	P14001-8	CNTR COND	RG178		21.0	FLEX COAX
70	J10017-30		P14001-1		WHT/BRN	26	21.0	
71	J10017-31		P14001-3		WHT	26	21.0	
72	J10017-32	CW SEL	P32004-8		WHT/BLK	26	9.96	
73	J10017-33		P32004-6		BRN	26	9.96	
74	J10017-34	EXT TRIG-	P32004-5		WHT/BLU	26	9.96	
75	J10017-35	INT SEL	P32004-12		GRN	26	9.96	

WIRE R

LINE Nº	FROM TERMINAL	FROM NOTES	TERM
76	J10017-36	+5 ON TRACK	P320
77	J10017-37		DS1000
78	P14001-1		J100
79	P14001-2	(2)	R10
80	P14001-2	(2)	SHLDS OF F
81	P14001-3		J100
82	P14001-4		K
83	P14001-5		S10
84	P14001-6		J100
85	P14001-7		S10
86	P14001-8		J100
87	P14001-9	+5V	P32
88	P14001-10		S10
89	P14001-11		P27
90	P14001-12		S10
91	P14001-13		N
92	P14001-14		N
93	P14001-15		N
94	P14001-16		N
95	P14001-17		N
96	P14001-18		N
97	P27001-1		J100
98	P27001-1	(2)	DS1000
99	P27001-2		K
100	P27001-3		P270
101	P27001-4		N
102	P27001-5		J100
103	P27001-6		P140
104	P27001-7		J100
105	P27001-8		J100
106	P27001-9		R10
107	P27001-10		J100
108	P27002-1		S10
109	P27002-2		N
110	P27002-3		K
111	P27002-4		DS1000
112	P27002-5		DS1000
113	P27002-6		DS1000
114	P27002-7		DS1000
115	P27002-8		DS1000
116	P27002-9		DS1000
117	P27002-10	(2)	R10
118	P27002-10	(2)	P270
119	P32004-1		N
120	P32004-2		N
121	P32004-3		K
122	P32004-4		J100
123	P32004-4		P140
124	P32004-5		J1001
125	P32004-6		J1001
126	P32004-7		N
127	P32004-8		J1001
128	P32004-9		N
129	P32004-10		N
130	P32004-11		N
131	P32004-12		J1001
132	P32004-13		J1001
133	P32004-14		N
134	P32004-15		N
135	P32004-16		N
136	P32004-17		N
137	P32004-18		N

G	H	J	K	L

DATE	REV	CHANGE	APVD

NNING LIST

TO		WIRE			
NAL	NOTES	COLOR	AWG	LG	NOTES
-13		WHT/GRY	26	9.96	
-LONG		WHT	26	8.52	
-30	*				
4-1	(2)	BLK	26	12.24	
001-6 & 8	**	BLK	26	3.96	
-31	*				
3-1		GRN	26	9.0	
-27	*				
5-1	(2)	WHT/RED	26	16.0	
-29	*				
4-4	(2)	ORN	26	18.0	
7-2		WHT/ORN	26	18.96	
1-6		WHT	26	14.52	
2-4	(3)	RED	26	10.0	
-23	*				
SHORT		WHT/BLK	26	6.0	
2-10	C(2)	BLK	26	9.0	
-26	*				
1-11	*				
-24	*				
7-6	*				
5-1	(3)	VIO	26	5.0	
-25	*				
6-6	(3)	RED	26	6.0	
-LONG		WHT/YEL	26	12.0	
-LONG		WHT	26	8.04	
-LONG		WHT/ORN	26	12.0	
-LONG		WHT/BRN	26	9.96	
-LONG		WHT/GRN	26	13.5	
-LONG		WHT/RED	26	9.0	
6-3	(4)	BLK	26	7.0	
1-3	*				
7-7	*				
1-9	*				
-34	*				
-33	*				
-32	*				
-35	*				
-36	*				

INDEX

TERMINAL	LINE NUMBERS
DS10001	113
DS10002	1, 111
DS10003	1, 115
DS10004	2, 114
DS10005	4, 5
DS10006	6, 116
DS10007	6, 7, 112
DS10008	77, 98
DS10009	8, 10
DS10010	12, 43
M10001	13, 14
S10001	5, 13, 15, 49, 54, 58
S10002	12, 16, 19, 20, 53, 90
S10003	4, 14, 21, 22, 83
S10005	18, 23, 47, 59, 85
S10006	11, 23, 25, 29, 55, 56, 108
S10007	26, 27, 88
S10008	28 THRU 33, 41
R10001	50 THRU 52
R10002	3, 16
R10003	34, 35
R10004	21, 35 THRU 37, 79
R10005	2, 9, 34, 37, 48, 60, 106
R10006	7, 8, 33, 39, 61, 117
R10007	10, 11
C10001	26, 38
GL10001	28, 39, 44
J10012	27
J10017	40 THRU 78, 81, 84, 86, 102, 104, 105, 107, 122, 124, 125, 127 131,132
P27001	45, 62 THRU 65, 89, 97 THRU 107, 118
P27002	108 THRU 118
P32004	46, 72 THRU 76, 87, 119 THRU 137
P14001	66, 78 THRU 96, 103, 123

LEGEND:

ASTERISK (*) ----- WIRE RUN REPEATED, FOR REFERENCE ONLY

(**) -- COAX SHIELDS JOINED FIRST W/.167' OF BLK 26 AWG WIRE (COVER COAX SHIELD CONNECTIONS WITH HEATSHRINK TUBING A/R)

NC ---------- NO CONNECTION

(N) ---------- NUMBER (QTY) OF WIRES

PGT ---------- PIGTAIL

SS(X) ---------- SHIELDED SINGLE NO.X

SP(X) ---------- SHIELDED PAIR NO.X

ST(X) ---------- SHIELDED TRIPLE NO.X

SQ(X) ---------- SHIELDED QUAD (4) NO.X

CX(X) ---------- COAX NO.X (CENTER CONDUCTOR ONLY)

S ---------- SOLDER

C(N) ---------- CONNECTION SO INDICATED HAS MULTIPLE CONDUCTORS ATTACHED AND IS NOT COMPLETED AT THIS TIME

M ---------- MALE TERMINAL

F ---------- FEMALE TERMINAL

T ---------- TAG IDENTIFY BY TERMINAL DESIGNATION

	IFR SYSTEMS INC. 10200 West York St., Wichita, Kansas 67215	
DRAWN SIGLER 7-30-91	TITLE: MECHANICAL ASSEMBLY, FRONT PANEL, RD-301A	
CHECKED J. SCHMIDT 12-91		
APPROVED P. HARRIS 12-91	SIZE: D	DWG. NO.: 7005-9040-100 REV: A3
	SCALE: NTS	DO NOT SCALE CAGE 51190 SHEET 3 OF 4

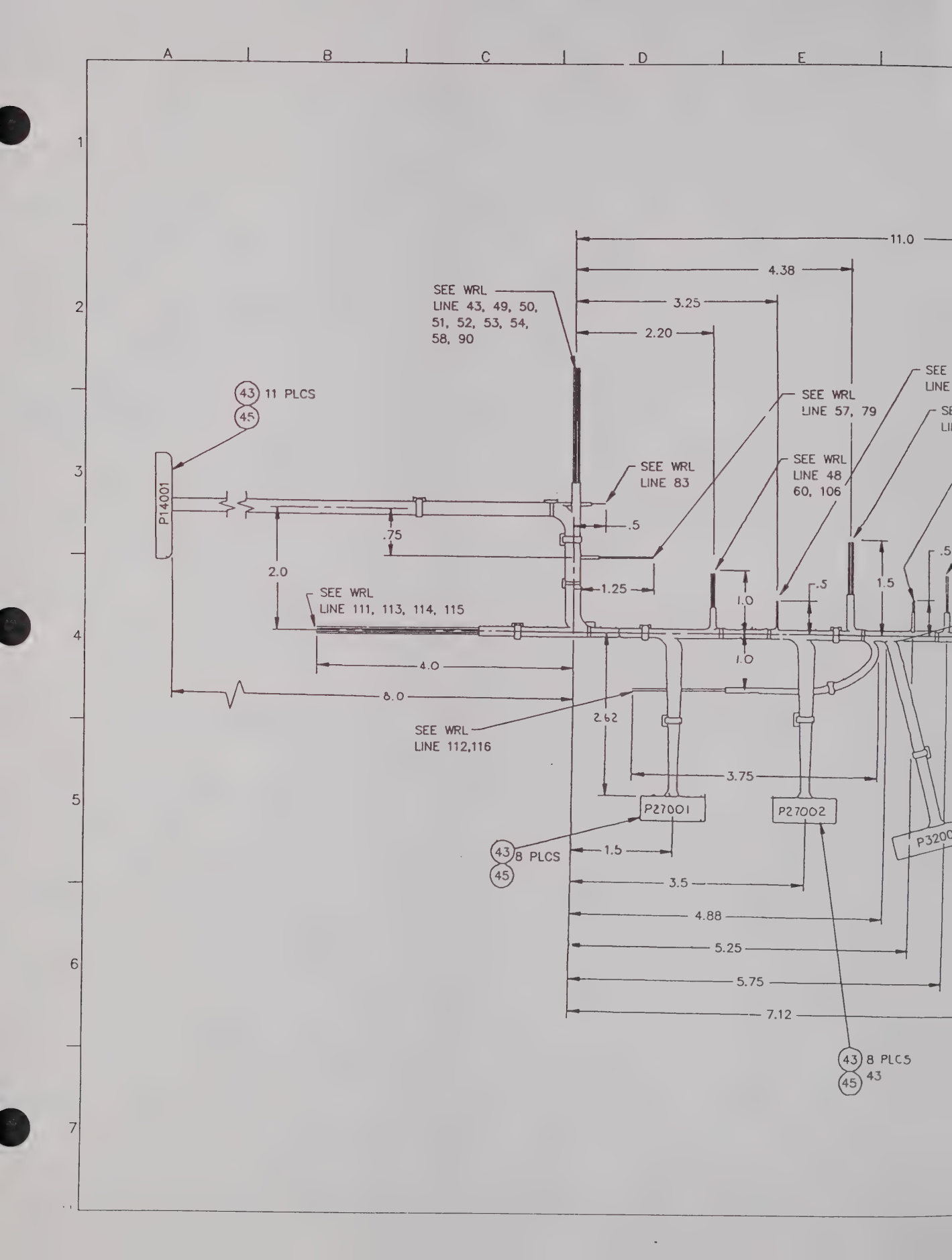
A
B
C
D
E
1
2
3
4
5
6
7
11.0
4.38
3.25
2.20
SEE WRL
LINE 43, 49, 50,
51, 52, 53, 54,
58, 90
43
45
11 PLCS
P14001
SEE WRL
LINE 57, 79
SEE WRL
LINE 83
SEE WRL
LINE 48
60, 106
.75
.5
2.0
1.25
SEE WRL
LINE 111, 113, 114, 115
1.0
.5
1.5
1.0
4.0
8.0
SEE WRL
LINE 112,116
2.62
3.75
P27001
P27002
43
45
8 PLCS
1.5
3.5
4.88
5.25
5.75
7.12
43
45
8 PLCS
43

G H J K L

DATE	REV	CHANGE	APVD
		SEE SHEET 1	

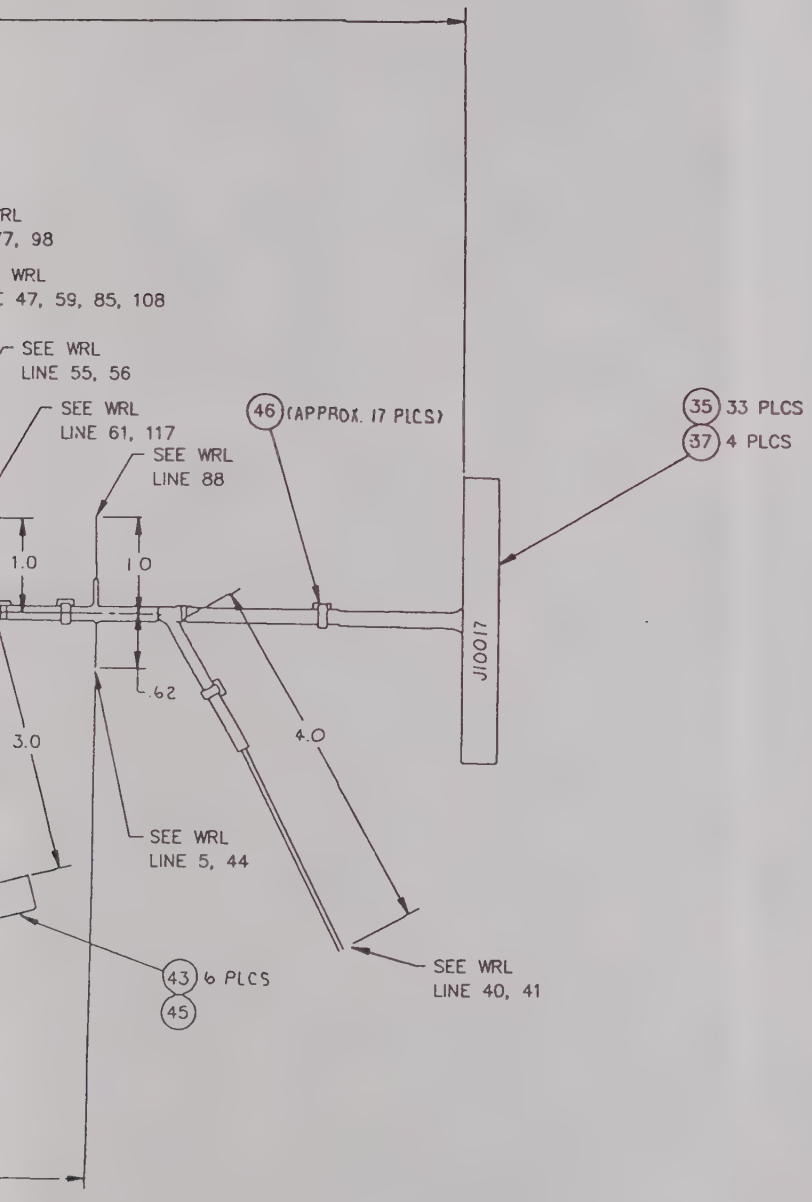

		IFR SYSTEMS INC
DRAWN A. OSBURN 4-15-92	TITLE	WIRE HARNESS ASSY FRONT PANEL, RD301A
CHECKED J. SCHMIDT 12-91		
APPROVED P. HARRIS 12-91	SIZE D	DWG. NO. 7005-9040-100 REV A3
	SCALE 1=1	DO NOT SCALE CAGE 51190 SHEET 4 OF 4

LI,283,2.MDATAB01 IFR SYSTEMS, INC.
FRI, JAN 8, 1993, 11:44 AM

REQUES

BILL OF MATERIAL LISTED BY REFERENCE DESIGNATOR
AS OF 01/08/93

ASSEMBLY PART NO.: 7005-9040-100
DESCRIPTION: MECH ASSY, FRONT PANEL
ITEM MASTER REV: A3 ECO NO: #L141
REV OF THIS BOM: DATE OF LAST ECO: 08/11/92

STATUS	REFERENCE DESIGNATOR	QUANTITY PER ASSY	PART NUMBER	DESCRIPTION	EFFE
ACTIVE		11.44	6008-1000-001	WIRE,HOOK,TFE,26GA, 7S,BLACK	00/0
ACTIVE		.83	6008-1000-002	WIRE,HOOK,TFE,26GA, 7S,BROWN	00/0
ACTIVE		5.35	6008-1000-003	WIRE,HOOK,TFE,26GA, 7S,RED	00/0
ACTIVE		1.50	6008-1000-004	WIRE,HOOK,TFE,26GA, 7S,ORANGE	00/0
ACTIVE		1.12	6008-1000-005	WIRE,HOOK,TFE,26GA, 7S,YELLOW	00/0
ACTIVE		1.57	6008-1000-006	WIRE,HOOK,TFE,26GA, 7S,GREEN	00/0
ACTIVE		1.77	6008-1000-008	WIRE,HOOK,TFE,26GA, 7S,VIOLET	00/0
ACTIVE		.58	6008-1000-009	WIRE,HOOK,TFE,26GA, 7S,GRAY	00/0
ACTIVE		7.47	6008-1000-010	WIRE,HOOK,TFE,26GA, 7S,WHITE	00/0
ACTIVE		2.65	6008-1000-011	WIRE,HOOK,TFE,26GA, 7S,WHT/BLK	00/0
ACTIVE		3.70	6008-1000-012	WIRE,HOOK,TFE,26GA, 7S,WHT/BRN	00/0
ACTIVE		3.52	6008-1000-013	WIRE,HOOK,TFE,26GA, 7S,WHT/RED	00/0
ACTIVE		5.00	6008-1000-014	WIRE,HOOK,TFE,26GA, 7S,WHT/ORG	00/0
ACTIVE		3.40	6008-1000-015	WIRE,HOOK,TFE,26GA, 7S,WHT/YEL	00/0
ACTIVE		3.11	6008-1000-016	WIRE,HOOK,TFE,26GA, 7S,WHT/GRN	00/0
ACTIVE		2.77	6008-1000-017	WIRE,HOOK,TFE,26GA, 7S,WHT/BLU	00/0
ACTIVE		6.82	6008-1000-018	WIRE,HOOK,TFE,26GA, 7S,WHT/VIO	00/0
ACTIVE		6.73	6008-1000-019	WIRE,HOOK,TFE,26GA, 7S,WHT/GRY	00/0
ACTIVE		.38	6008-3000-001	WIRE,HOOK,TFE,22GA, 7S,BLACK	00/0
ACTIVE		.83	6008-3000-004	WIRE,HOOK,TFE,22GA, 7S,ORANGE	00/0
ACTIVE		.58	6008-3000-009	WIRE,HOOK,TFE,22GA, 7S,GRAY	00/0
ACTIVE		.58	6008-3000-010	WIRE,HOOK,TFE,22GA, 7S,WHITE	00/0

LI,283,2.MDATAB01 IFR SYSTEMS, INC.
FRI, JAN 8, 1993, 11:44 AM

BILL OF MATERIAL LISTED BY REFERENCE DESIGNATOR
AS OF 01/08/93

ASSEMBLY PART NO.: 7005-9040-100
DESCRIPTION: MECH ASSY, FRONT PANEL
ITEM MASTER REV: A3 ECO NO: #L141
REV OF THIS BOM: DATE OF LAST ECO: 08/11/92

STATUS	REFERENCE DESIGNATOR	QUANTITY PER ASSY	PART NUMBER	DESCRIPTION	EFFE
ACTIVE		3.50	6042-0000-005	CABLE,COAX,FLEX,RG-178B/U	00/0
ACTIVE	*01	1.00	1405-9050-800	PANEL, FRONT RD-301A	00/0
ACTIVE	*02	1.00	1414-4982-500	COVER,DISPLAY	00/0
ACTIVE	*03	2.00	2402-0921-900	KNOB,RND, .4380D,.128ID,.520LG	00/0
ACTIVE	*04	1.00	1400-9050-900	BRKT,METER MOUNTING	00/0
ACTIVE	*05	1.00	2402-4984-700	KNOB ASSY,INTRL PRF/AM	00/0
ACTIVE	*06	1.00	7010-4930-900	PCB ASSY,RANGE DISCRETE	00/0
ACTIVE	*07	1.00	7010-4930-800	PCB ASSY, RANGE DIGIT SWITCH	00/0
ACTIVE	*08	3.00	2402-0013-300	KNOB 1	00/0
ACTIVE	*09	2.00	2402-4984-800	KNOB ASSY, PULSE WIDTH	00/0
ACTIVE	*10	2.00	2800-7600-168	SPACER,AL,.25HEX,4-40ID,.75 LG	00/0
ACTIVE	*11	1.00	7010-4931-700	PCB ASSY,MOD MODE SWITCH	00/0
ACTIVE	*12	1.00	2401-2501-200	DIAL 2 *ASY	00/0
ACTIVE	*13	1.00	2402-0922-000	KNOB,DUAL,.6200D,.252ID,.460LG	00/0
ACTIVE	*14	1.00	7010-4930-700	PCB ASSY,R.F. MODE SWITCH	00/0
ACTIVE	*15	1.00	2402-0005-703	KNOB 1	00/0
ACTIVE	*16	1.00	2402-4985-000	KNOB ASSY,10DB STEPPED ATTEN	00/0
ACTIVE	*17	1.00	2401-2526-400	DIAL *ASY	00/0
ACTIVE	*19	1.00	2403-9050-000	OVERLAY, RD-301A	00/0
ACTIVE	*20	2.00	2800-7600-114	SPACER,AL,.5000D,.375ID,.080LG	00/0
ACTIVE	*21	4.00	2850-0000-020	NUT,HEX,SMALL PAT,4-40	00/0
ACTIVE	*22	2.00	2803-0188-006	SCREW,4-40 X 3/16 PPHM	00/0

LI,283,2.MDATAB01 IFR SYSTEMS, INC.
FRI, JAN 8, 1993, 11:44 AM

BILL OF MATERIAL LISTED BY REFERENCE DESIGNATOR
AS OF 01/08/93

ASSEMBLY PART NO.: 7005-9040-100
DESCRIPTION: MECH ASSY, FRONT PANEL
ITEM MASTER REV: A3 ECO NO: #L141
REV OF THIS BOM: DATE OF LAST ECO: 08/11/92

STATUS	REFERENCE DESIGNATOR	QUANTITY PER ASSY	PART NUMBER	DESCRIPTION	EFFE(
ACTIVE	*23	4.00	2803-0500-006	SCREW,4-40 X 1/2 PPHM	00/0(
ACTIVE	*24	8.00	2804-0250-003	SCREW 6-32X1/4 PFHMS	00/0(
ACTIVE	*25	3.00	2850-0000-077	NUT,HEX,1/4 X 28,5/16F,1/8 THK	00/0(
ACTIVE	*26	10.00	2840-7600-208	WASHER,ALUM,.380D,.250ID,.020T	00/0(
ACTIVE	*27	3.00	2840-7600-205	WASHER,ALUM,.500D,.375ID,.020T	00/0(
ACTIVE	*28	5.00	2850-0000-081	NUT,TOG SW DRESS.35D,1/4-40ID	00/0(
ACTIVE	*29	26.00	2803-0125-001	SCREW,4-40 X 1/8 SHS	00/0(
ACTIVE	*30	2.00	2850-7601-301	SCREW,.188L4-40.19HH,4-40X.300	00/0(
ACTIVE	*31	7.00	2840-0000-003	WASHER,LOCK,INT TOOTH,4	00/0(
ACTIVE	*32	4.00	2840-0000-004	WASHER,LOCK,INT TOOTH,2	00/0(
ACTIVE	*33	4.00	2850-0000-012	NUT,HEX,SMALL PAT,2-56	00/0(
ACTIVE	*34	4.00	2850-0000-046	NUT,HEX,EX SM PAT,1/4_32	00/0(
ACTIVE	*35	33.00	2114-0000-005	CONTACT,M D-SUB,CRMP 20-24,SG	00/0(
ACTIVE	*36	2.00	2800-3065-300	SPACER,AL,.37500,.272IO,.062LG	00/0(
ACTIVE	*37	4.00	2114-0000-006	CONN PIN,66507-9 24-28 AWG	00/0(
ACTIVE	*38	1.00	2840-0000-019	3/8 FLAT WASHER	00/0(
ACTIVE	*39	1.00	2840-0000-016	3/8 INT TOOTH LOCKWASHER	00/0(
ACTIVE	*41	.00	6010-0125-100	TUBING,HS, 1/8 ID,CLEAR	00/0(
ACTIVE	*42	.00	6011-0027-001	TUBING,TF,22 AWG,NATURAL,TW	00/0(
ACTIVE	*43	35.00	2114-0000-022	CONTACT,DCANT,CRIMP,22-30,TIN	00/0(
ACTIVE	*45	4.00	2127-9900-100	KEY,POLARIZIN,MOLEX 15-04-9209	00/0(
ACTIVE	*46	17.00	6004-6005-400	TY-RAP,4.0 LG	00/0(

BILL OF MATERIAL LISTED BY REFERENCE DESIGNATOR
AS OF 01/08/93

ASSEMBLY PART NO.: 7005-9040-100
DESCRIPTION: MECH ASSY, FRONT PANEL
ITEM MASTER REV: A3 ECO NO: #L141
REV OF THIS BOM: DATE OF LAST ECO: 08/11/92

STATUS	REFERENCE DESIGNATOR	QUANTITY PER ASSY	PART NUMBER	DESCRIPTION	EFFE
ACTIVE	*SCHEM	.00	DWG-0000-9040-100	SCHEM,FRONT PANEL MECH ASSY	00/0
ACTIVE	AT10001	1.00	2901-7633-100	ATTEN,STEP,0- 10DB/ 1DB,1W,SMA	00/0
ACTIVE	AT10002	1.00	2901-7333-000	ATTEN,STEP,0-100DB/100B,3W,SMA	00/0
ACTIVE	AT10003	1.00	2901-7333-100	ATTEN,0-59DB/1DB,3W,SMA	00/0
ACTIVE	C10001	1.00	1507-0336-021	CAP,UF 33, 20V,TANT, 20	00/0
ACTIVE	DS10001	8.00	4818-0000-020	OPTO LED,HLMP-1301,RED	00/0
ACTIVE	DS10002	-.--	4818-0000-020	OPTO LED,HLMP-1301,RED	00/0
ACTIVE	DS10003	1.00	4818-0000-021	OPTO LED,HLMP-1503,GREEN	00/0
ACTIVE	DS10004	-.--	4818-0000-020	OPTO LED,HLMP-1301,RED	00/0
ACTIVE	DS10005	-.--	4818-0000-020	OPTO LED,HLMP-1301,RED	00/0
ACTIVE	DS10006	-.--	4818-0000-020	OPTO LED,HLMP-1301,RED	00/0
ACTIVE	DS10007	-.--	4818-0000-020	OPTO LED,HLMP-1301,RED	00/0
ACTIVE	DS10008	-.--	4818-0000-020	OPTO LED,HLMP-1301,RED	00/0
ACTIVE	DS10009	-.--	4818-0000-020	OPTO LED,HLMP-1301,RED	00/0
ACTIVE	DS10010	1.00	4818-0000-022	OPTO LED,HCMP-1523 HI PERFGRN*	00/0
ACTIVE	GL10001	1.00	2850-0000-014	LUG,GND,4	00/0
ACTIVE	J10007	9.00	2200-0410-100	CONN,ADAPT,F BNC/F SMASTR BHD*	00/0
ACTIVE	J10008	-.--	2200-0410-100	CONN,ADAPT,F BNC/F SMASTR BHD*	00/0
ACTIVE	J10009	-.--	2200-0410-100	CONN,ADAPT,F BNC/F SMASTR BHD*	00/0
ACTIVE	J10010	-.--	2200-0410-100	CONN,ADAPT,F BNC/F SMASTR BHD*	00/0
ACTIVE	J10011	-.--	2200-0410-100	CONN,ADAPT,F BNC/F SMASTR BHD*	00/0
ACTIVE	J10012	1.00	2113-0000-020	CONN UG1094/U	00/0

LI,283,2.MDATAB01 IFR SYSTEMS, INC.
FRI, JAN 8, 1993, 11:44 AM

BILL OF MATERIAL LISTED BY REFERENCE DESIGNATOR
AS OF 01/08/93

ASSEMBLY PART NO.: 7005-9040-100
DESCRIPTION: MECH ASSY, FRONT PANEL
ITEM MASTER REV: A3 ECO NO: #L141
REV OF THIS BOM: DATE OF LAST ECO: 08/11/92

STATUS	REFERENCE DESIGNATOR	QUANTITY PER ASSY	PART NUMBER	DESCRIPTION	EFFE(
ACTIVE	J10013	-.--	2200-0410-100	CONN,ADAPT,F BNC/F SMASTR BHD*	00/0(
ACTIVE	J10014	-.--	2200-0410-100	CONN,ADAPT,F BNC/F SMASTR BHD*	00/0(
ACTIVE	J10015	-.--	2200-0410-100	CONN,ADAPT,F BNC/F SMASTR BHD*	00/0(
ACTIVE	J10017	1.00	2116-0000-008	CONN,D-SUB,M,37-P,CCA(CNI)	00/0(
ACTIVE	J10018	-.--	2200-0410-100	CONN,ADAPT,F BNC/F SMASTR BHD*	00/0(
ACTIVE	M10001	1.00	2900-0100-804	METER,KW PK/EFF-F MHZ RD301A	00/0(
ACTIVE	P14001	2.00	2115-0000-015	CONN,C HSG,.100C,18-P	00/0(
ACTIVE	P27001	2.00	2115-0000-013	CONN,C HSG,.100C,10-P	00/0(
ACTIVE	P27002	-.--	2115-0000-013	CONN,C HSG,.100C,10-P	00/0(
ACTIVE	P32004	-.--	2115-0000-015	CONN,C HSG,.100C,18-P	00/0(
ACTIVE	R10001/S2	1.00	4757-0000-001	POT, 10K OHM, 86C2DE20A15/R71	00/0(
ACTIVE	R10002	2.00	4702-0391-003	RES,5, 1/4W 390 OHM *	00/0(
ACTIVE	R10003/R4	1.00	4750-7605-901	POT, 10K/100,86A3DG36AA0376R55	00/0(
ACTIVE	R10005	1.00	4770-8810-300	POT, 10K OHM, 3540S-1-103	00/0(
ACTIVE	R10006/S7	1.00	4750-7608-300	POT, 5K OHM, 380SW10-5K-S .78	00/0(
ACTIVE	R10007	-.--	4702-0391-003	RES,5, 1/4W 390 OHM *	00/0(
ACTIVE	S10001	1.00	5114-0000-008	SWITCH TOG DPDT ON-ON-ON LUG	00/0(
ACTIVE	S10003	1.00	5114-0000-001	SWITCH TOG SPDT ON-ON LUG	00/0(
ACTIVE	S10005	1.00	5115-0000-001	SWITCH GRAYHILL 30-1	00/0(
ACTIVE	S10006	1.00	5114-0000-004	SWITCH TOG DPDT ON-ON LUG	00/0(
ACTIVE	S10008	1.00	5115-0002-000	SWITCH,SNAP IN MTG DPDT *	00/0(

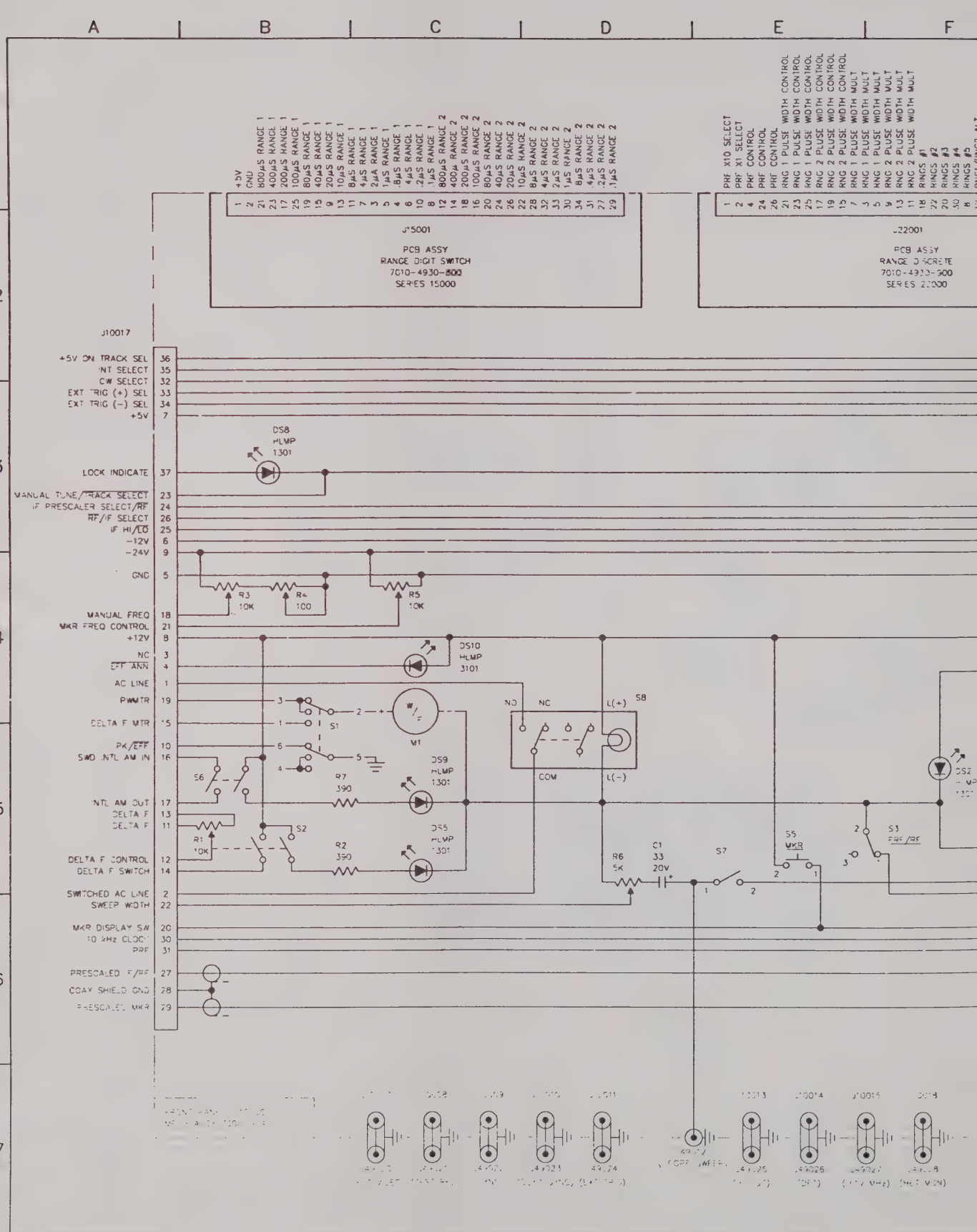
A
B
C
D
E
F
1
2
3
4
5
6
7
+5V
GND
800µS RANGE 1
400µS RANGE 1
200µS RANGE 1
100µS RANGE 1
80µS RANGE 1
40µS RANGE 1
20µS RANGE 1
10µS RANGE 1
8µS RANGE 1
4µS RANGE 1
2µA RANGE 1
1µS RANGE 1
.8µS RANGE 1
.4µS RANGE 1
.2µS RANGE 1
.1µS RANGE 1
800µS RANGE 2
400µS RANGE 2
200µS RANGE 2
100µS RANGE 2
80µS RANGE 2
40µS RANGE 2
20µS RANGE 2
10µS RANGE 2
8µS RANGE 2
4µS RANGE 2
2µS RANGE 2
1µS RANGE 2
.8µS RANGE 2
.4µS RANGE 2
.2µS RANGE 2
.1µS RANGE 2
J15001
PCB ASSY
RANGE DIGIT SWITCH
7010-4930-500
SERIES 15000
PRF X10 SELECT
PRF X1 SELECT
PRF CONTROL
PRF CONTROL
PRF CONTROL
RNG 1 PULSE WIDTH CONTROL
RNG 1 PULSE WIDTH CONTROL
RNG 1 PULSE WIDTH CONTROL
RNG 2 PULSE WIDTH CONTROL
RNG 2 PULSE WIDTH CONTROL
RNG 2 PULSE WIDTH CONTROL
RNG 1 PULSE WIDTH MULT
RNG 1 PULSE WIDTH MULT
RNG 1 PULSE WIDTH MULT
RNG 2 PULSE WIDTH MULT
RNG 2 PULSE WIDTH MULT
RNG 2 PULSE WIDTH MULT
RINGS #1
RINGS #2
RINGS #3
RINGS #4
RINGS #5
J22001
PCB ASSY
RANGE DISCRETE
7010-4930-900
SERIES 22000
J10017
+5V ON TRACK SEL 36
INT SELECT 35
CW SELECT 32
EXT TRIG (+) SEL 33
EXT TRIG (−) SEL 34
+5V 7
LOCK INDICATE 37
MANUAL TUNE/TRACK SELECT 23
IF PRESCALER SELECT/RF 24
RF/IF SELECT 26
IF HI/LO 25
−12V 6
−24V 9
GND 5
MANUAL FREQ 18
MKR FREQ CONTROL 21
+12V 8
NC 3
EFF ANN 4
AC LINE 1
PWMTR 19
DELTA F MTR 15
PK/EFF 10
SWD INTL AM IN 16
INTL AM OUT 17
DELTA F 13
DELTA F 11
DELTA F CONTROL 12
DELTA F SWITCH 14
SWITCHED AC LINE 2
SWEEP WIDTH 22
MKR DISPLAY SW 20
10 MHz CLOCK 30
PRF 31
PRESCALED F/RF 27
COAX SHIELD GND 28
PRESCALED MKR 29
DS8
HLMP
1301
R3
10K
R4
100
R5
10K
DS10
HLMP
3101
M1
S1
S6
S2
R7
390
DS9
HLMP
1301
R1
10K
R2
390
DS5
HLMP
1301
S8
NO
NC
L(+)
COM
L(−)
R6
5K
C1
33
20V
S7
S5
MKR
S3
FRE/RF
DS2

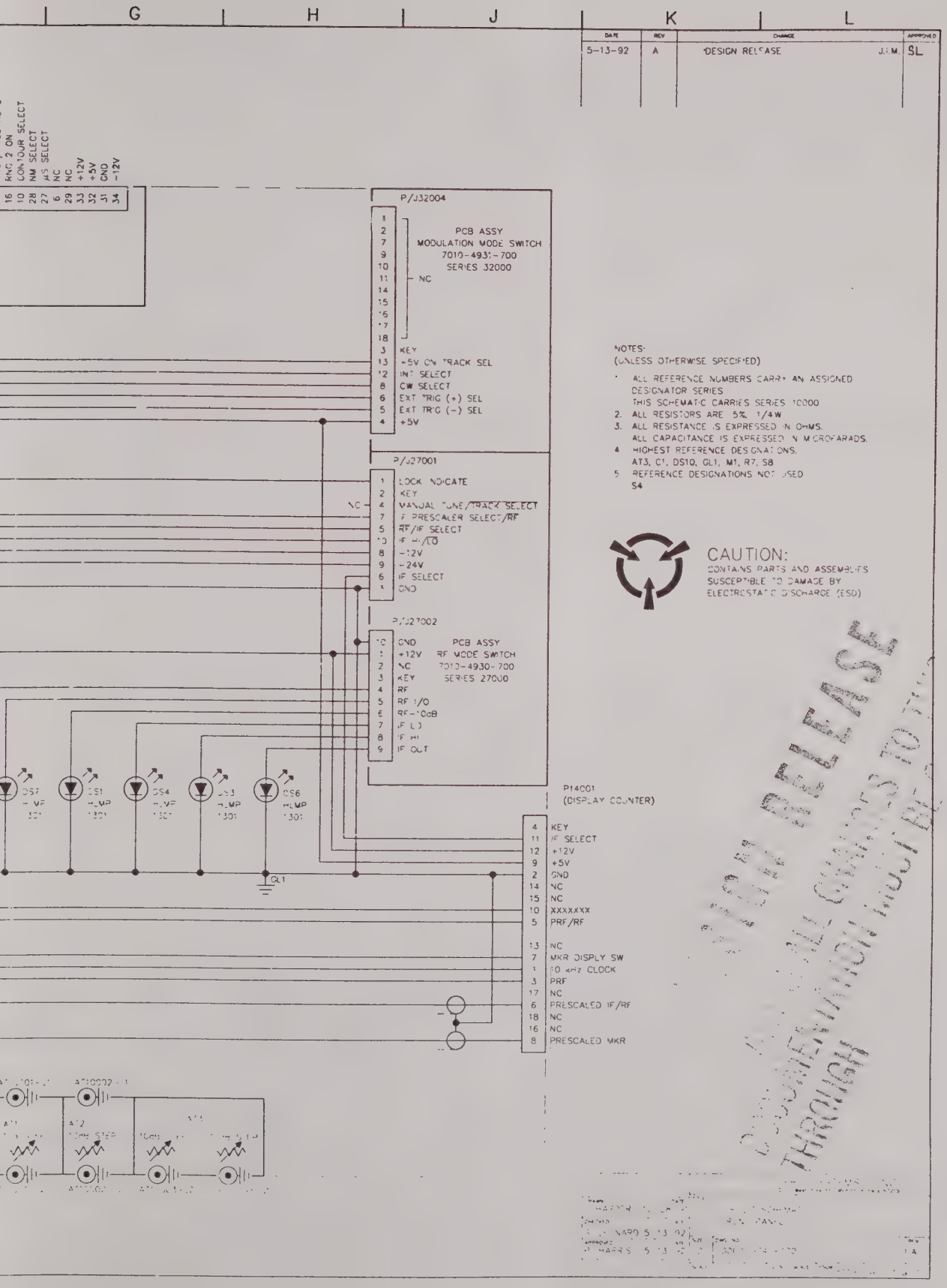
G
H
J
K
L
DATE
REV
CHANGE
APPROVED
5-13-92
A
DESIGN RELEASE
J.R.M.
SL
P/J32004
PCB ASSY
MODULATION MODE SWITCH
7010-4931-700
SERIES 32000
NC
KEY
+5V CW TRACK SEL
INT SELECT
CW SELECT
EXT TRIG (+) SEL
EXT TRIG (-) SEL
+5V
P/J27001
LOCK INDICATE
KEY
MANUAL TUNE/TRACK SELECT
IF PRESCALER SELECT/RF
RF/IF SELECT
IF RF/LO
-12V
-24V
IF SELECT
GND
P/J27002
GND
+12V
NC
KEY
RF
RF I/O
RF -10dB
IF LO
IF HI
IF OUT
PCB ASSY
RF MODE SWITCH
7010-4930-700
SERIES 27000
P14001
(DISPLAY COUNTER)
KEY
IF SELECT
+12V
+5V
GND
NC
NC
XXXXXXX
PRF/RF
NC
MKR DISPLY SW
10 kHz CLOCK
PRF
NC
PRESCALED IF/RF
NC
NC
PRESCALED MKR
RNG 2 ON
CONTOUR SELECT
NM SELECT
µS SELECT
NC
NC
+12V
+5V
GND
-12V
DS7
DS1
DS4
DS3
DS6
GLT
NOTES:
(UNLESS OTHERWISE SPECIFIED)
1. ALL REFERENCE NUMBERS CARRY AN ASSIGNED DESIGNATOR SERIES. THIS SCHEMATIC CARRIES SERIES 10000
2. ALL RESISTORS ARE 5% 1/4W
3. ALL RESISTANCE IS EXPRESSED IN OHMS. ALL CAPACITANCE IS EXPRESSED IN MICROFARADS.
4. HIGHEST REFERENCE DESIGNATIONS. AT3, C1, DS10, GL1, M1, R7, S8
5. REFERENCE DESIGNATIONS NOT USED S4
CAUTION:
CONTAINS PARTS AND ASSEMBLIES SUSCEPTIBLE TO DAMAGE BY ELECTROSTATIC DISCHARGE (ESD)
DOCUMENT CONTROL
THIS DRAWING IS RELEASED
THROUGH ALL CHANGES TO THIS
DRAWING MUST BE APPROVED
BY DOCUMENT CONTROL

NOTES:

1. TIGHTEN SCREWS TO ≈ 5 IN LBS. APPLY A SMALL DROP OF "LOCTITE" #290. DP61051-0100-200) AROUND THE HEAD OF EACH SCREW AFTER TIGHTENING
2. SOLDER WITH "KESTER" 63/37 WIRE SOLDER WITH #25 + FLUX.
3. WASH WITH "ZEPRIDE" SOAP AND WATER.
4. DO NOT SUBMERGE SWITCH IN WATER.
5. PIN 3 REMOVED FOR KEYING PURPOSES
6. AFTER ITEM (2) IS INSTALLED ON SWITCH, CLIP SWITCH PINS ON OPPOSITE SIDE OF SWITCH BY AT LEAST .125 IN (APPROX HALF OF PIN). REMAINING PINS SHOULD NOT EXCEED .15 IN.

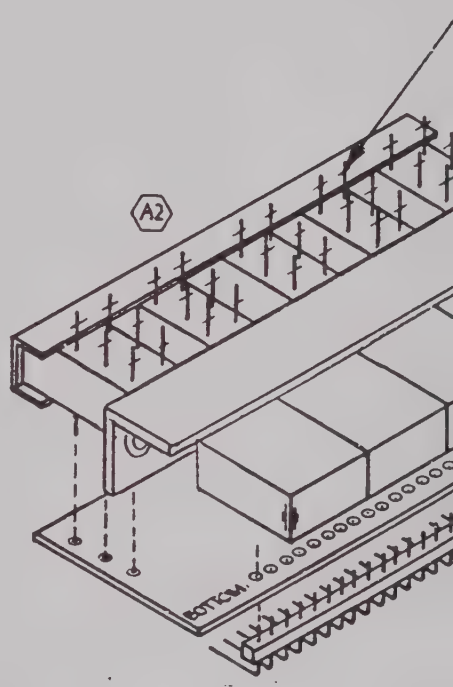

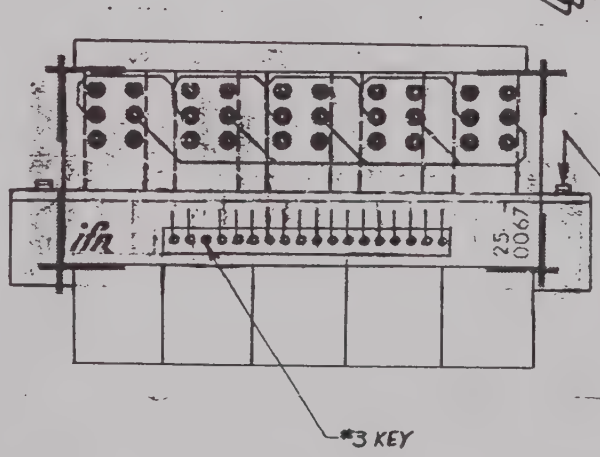

DATE	REV	CHANGE	APP'D
3/20/86	A	PROD. RELEASE ECN 6490	
4/1-2/86	A-1	INC RC 7698 SLR	VLH
6/13/86	A-2	INC RC 8696 WAW	VLH

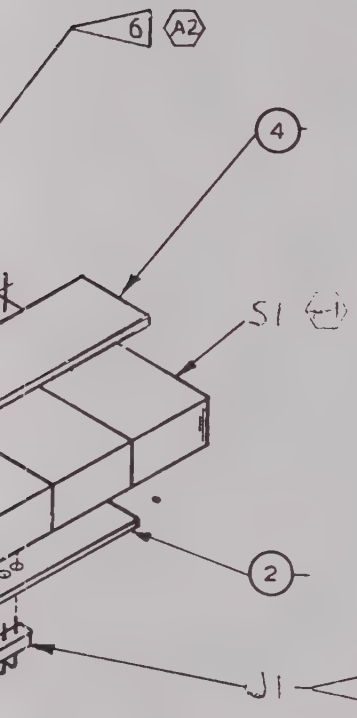

NOTE:

1. REF SCHEMATIC DWG Nº 0000-4911-700
2. REF DES SERIES ASSIGNED – 32XXX
3. ITEM Nº NOT USED.....1,6
4. (A-1) LAST REF DES USED... S1, J1
5. (A-1) LAST ITEM Nº USED... 7
6. (A-1) ITEM Nº's NOT USED... 1,3,5,6

SEE SEPARATE B.O.M

ITEM	REQ'D	PART NO.	DESCRIPTION
7	2	A-40x3/16	PBHMS
5	1	22-05-2181	"MOLEX" (18) PIN CONN.
4	1	49-316	MTG. BRKT.
3	1	PB1170	"CENTRALAB" (5) SECT SWITCH
2	1	25-0067	P.C. BOARD
1	1	49-317	SWITCH ASS'Y. (MOD. MODE)

NEXT ASS'Y	QT'Y	MODEL
49-401	1	RD301

APPLICATION

LIST OF MATERIALS

TOLERANCES
UNLESS OTHERWISE SPECIFIED
ALL DIMENSIONS APPLY AFTER FINISH
DECIMALS: ± .005
ANGLES: ± 1/2°
FRACTIONS: ± 1/64
SURFACE ROUGHNESS 125
REMOVE ALL BURRS

DRAWN [illegible] DATE 12-24-85
CHECKED WB DATE 2-11-86
APPROVED Greenbank DATE 2/11/86

INSTRUMENT FLIGHT RESEARCH CORPORATION
WICHITA, KANSAS

TITLE
MODULATION MODE SWITCH ASS'Y.
49-317

MATERIAL	SIZE	PART NUMBER	REV
NOTED	B	7010-4931-700	A-2
TREATMENT	SCALE	WEIGHT	SHEET 1 OF 1
FINISH	NONE		

1 2-PLCS

(14)

ASSY NO.	REVISION	DESCRIPTION	LAST ECN	DATE INC
7010-4931-700	A2	PCB ASSY,MOD MODE SWITCH	8696	06/12/86

STAT	REF.DES.	QTY	COMP. PART NO.	DESCRIPTION	EFFECTIVE
ACT		.00	DWG-0000-4911-700	DWG SCHEM,MODULATION MODE SW	00/00/00
ACT	*01	4.00	0002-0000-000	*** REF DESIG NOT USED ***	00/00/00
ACT	*02	1.00	1700-2506-700	BO PC 1	00/00/00
ACT	*03	-.--	0002-0000-000	*** REF DESIG NOT USED ***	00/00/00
ACT	*04	1.00	1400-4951-600	BRKT,MODULATION MODE SWITCH	00/00/00
ACT	*05	-.--	0002-0000-000	*** REF DESIG NOT USED ***	00/00/00
ACT	*06	-.--	0002-0000-000	*** REF DESIG NOT USED ***	00/00/00
ACT	*07	2.00	2801-0188-006	SCREW 2-56 X 3/16 PBHMS	00/00/00
ACT	J32001	1.00	2115-0000-021	CONN MOLEX 22-05-2181	00/00/00
ACT	S32001	1.00	5115-0000-011	SWITCH PB1170 CENTRALAB	00/00/00

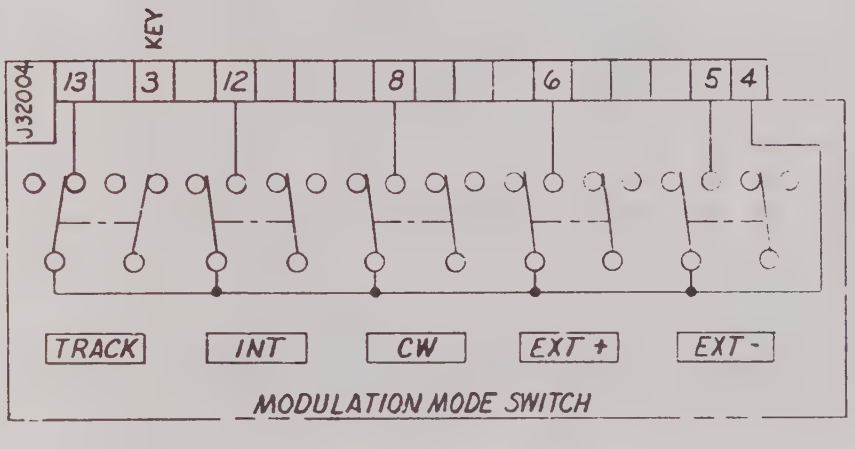
KEY
J32004
13
3
12
8
6
5
4
TRACK
INT
CW
EXT +
EXT -
MODULATION MODE SWITCH

E F G H

DATE	REV	CHANGE	APVD
3/20/85	A	PROD RELEASE ECN 5ATC	TC

NOTE:

1. ALL REF Nº's CARRY AN ASSIGNED DESIGNATOR SERIES. THIS SCHEMATIC CARRIES SERIES 32XXX
2. LAST REF USED : J32004
   S32001
3. REF Nº's NOT USED: J32001
   J32002
   J32003
4. SWITCH SHOWN IN TRACKING MODE POSITION.

(1 PRODUCTION PNL)

DASH NO	REF DES SERIES	NEXT ASSY	MODEL
	32XXX	7010-4931-700	RD301

APPLICATION

UNLESS OTHERWISE SPECIFIED:
ALL DIMENSIONS APPLY AFTER FINISH
TOLERANCES:
DECIMALS: .xx ± .xxx ±
FRACTIONS: ±
ANGLES: ±
SURFACE FINISH: √
REMOVE ALL BURRS
DO NOT SCALE THIS DRAWING

MATERIAL

FINISH

-IFR INC- 10200 West York Street Wichita, Kansas 67215

DRAWN L.A.Meis,Jr.	DATE 01 FEB '85	
CHECKED	DATE 2-11-85	
APPROVED Greenbank	DATE 2-11-85	

TITLE
SCHEMATIC
MODULATION MODE SWITCH
RD 301 (49-117)

SIZE	DWG. NO.	REV
B	0000-4911-700	A

SCALE	CODE IDENT.	WEIGHT	SHEET 1 OF 1
	51190		

(11)

A
B
C
D
1
2
3
4
5
6
J27001
J27002
J1
R1
R2
R3
R4
R5
R6
1700-4920-700
NOTE
1.
2.
3.
4.
17"
11"
8.5"

E F G H

DATE	REV	CHANGE	APVD
	C		
10/19/84	D	REVISED & ADD NEW ARTWORK.	
10/29/84	D	PRODUCTION RELEASE ECN 6490	YH
2/7/85	D-1	INC RC 6703 M K M	YH

17"

11"

8.5"

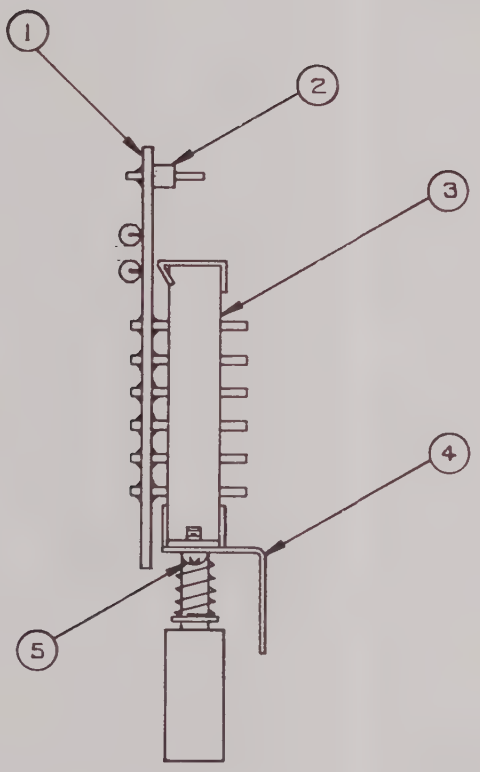

PRODUCTION PRINT

ALL REF NO'S CARRY AN ASSIGNED DESIGNATOR SERIES. THIS ASS'Y CARRIES 27XXX. (e.g.. R1 IS R27001)
ALL RESISTORS ARE 1/4W, 10%.
ALL RESISTANCE IS EXPRESSED IN OHMS.
LAST REF NO. USED:
R6 J2

PINS REMOVED FROM J1-2 & J2-3 FOR KEYING PURPOSES

8.5"

11"

DASH NO	REF DES SERIES	NEXT ASSY	MODEL
	10XXX	7005-4940-100	RD-301

APPLICATION

UNLESS OTHERWISE SPECIFIED: ALL DIMENSIONS APPLY AFTER FINISH
TOLERANCES
DECIMALS .XX ± .XXX ±
FRACTIONS ±
ANGLES ±
SURFACE FINISH √
REMOVE ALL BURRS
DO NOT SCALE THIS DRAWING
MATERIAL
FINISH

-IFR INC- 10200 West York Street Wichita, Kansas 67215

DRAWN C.LYDAY	DATE 10-12-84	TITLE PCB ASS'Y R.F. MODE SWITCH (49-307)
CHECKED	DATE 10-12-84	
APPROVED Bill Young	DATE 10-19-84	SIZE C; DWG. NO. 7010-4930-700; REV D-1
		SCALE 2:1; CODE IDENT 51190; WEIGHT; SHEET 1 OF 2

17"

13

NOTES : S

DATE	REV	CHANGE	APVD
	C		
	D	REMOVE JUMPER & ADD REV. ARTWORK	
10/24/84	D	PRODUCTION RELEASE ECN 6490	VH
		SEE SHEET 1	

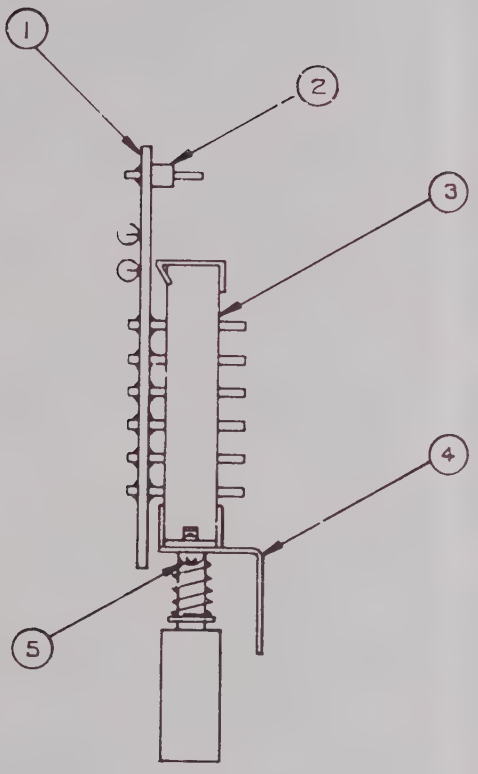

SHT 1 OF 2

DASH NO	REF DES SERIES	NEXT ASSY	MODEL
	10XXX	7005-4940-100	RD-301

APPLICATION

UNLESS OTHERWISE SPECIFIED ALL DIMENSIONS ARE AFTER FINISH
TOLERANCES
DECIMALS
FRACTIONS
ANGLES
SURFACE FINISH
REMOVE ALL BURRS
DO NOT SCALE THIS DRAWING

MATERIAL

FINISH

-IFR INC-
10200 West York Street
Wichita Kan 67215

DRAWN C. LYDAY	DATE 10-12-84	TITLE PCB ASSY R.F. MODE SWITCH (49-307)	
CHECKED WB	DATE 10-1-84		
APPROVED Bill Young	DATE 10-19-84	SIZE C	DWG NO 7010-4930-700 REV D-1
		SCALE 2:1	CODE IDENT 51190 WEIGHT SHEET 2 OF 2

(13)

PRINT DATE 06/17/92 BILL OF MATERIAL LISTED BY REF. DESIG. PAGE 1 ST.

ASSY NO.	REVISION	DESCRIPTION	LAST ECN	DATE INC
7010-4930-700	D1	PCB ASSY,R.F. MODE SWITCH		01/28/85

STAT	REF.DES.	QTY	COMP. PART NO.	DESCRIPTION	EFFECTIVE
ACT		.00	DWG-0000-4910-700	DWG SCHEM,RF MODE SWITCH	00/00/00
ACT	*01	1.00	1700-4920-700	PC BD,R.F. MODE SWITCH	00/00/00
ACT	*03	1.00	5115-0000-012	SWITCH,PB2112 CENTRALAB	00/00/00
ACT	*04	1.00	1400-4951-500	BRKT,RF MODE SWITCH	00/00/00
ACT	*05	2.00	2803-0188-006	SCREW,4-40 X 3/16 PPHM	00/00/00
ACT	J27001	2.00	2115-0000-016	WAFER,PCB,.100C,STR,10-P	00/00/00
ACT	J27002	-.--	2115-0000-016	WAFER,PCB,.100C,STR,10-P	00/00/00
ACT	R27001	6.00	4702-0821-003	RES, 5, 1/4W, 820 OHM	00/00/00
ACT	R27002	-.--	4702-0821-003	RES, 5, 1/4W, 820 OHM	00/00/00
ACT	R27003	-.--	4702-0821-003	RES, 5, 1/4W, 820 OHM	00/00/00
ACT	R27004	-.--	4702-0821-003	RES, 5, 1/4W, 820 OHM	00/00/00
ACT	R27005	-.--	4702-0821-003	RES, 5, 1/4W, 820 OHM	00/00/00
ACT	R27006	-.--	4702-0821-003	RES, 5, 1/4W, 820 OHM	00/00/00

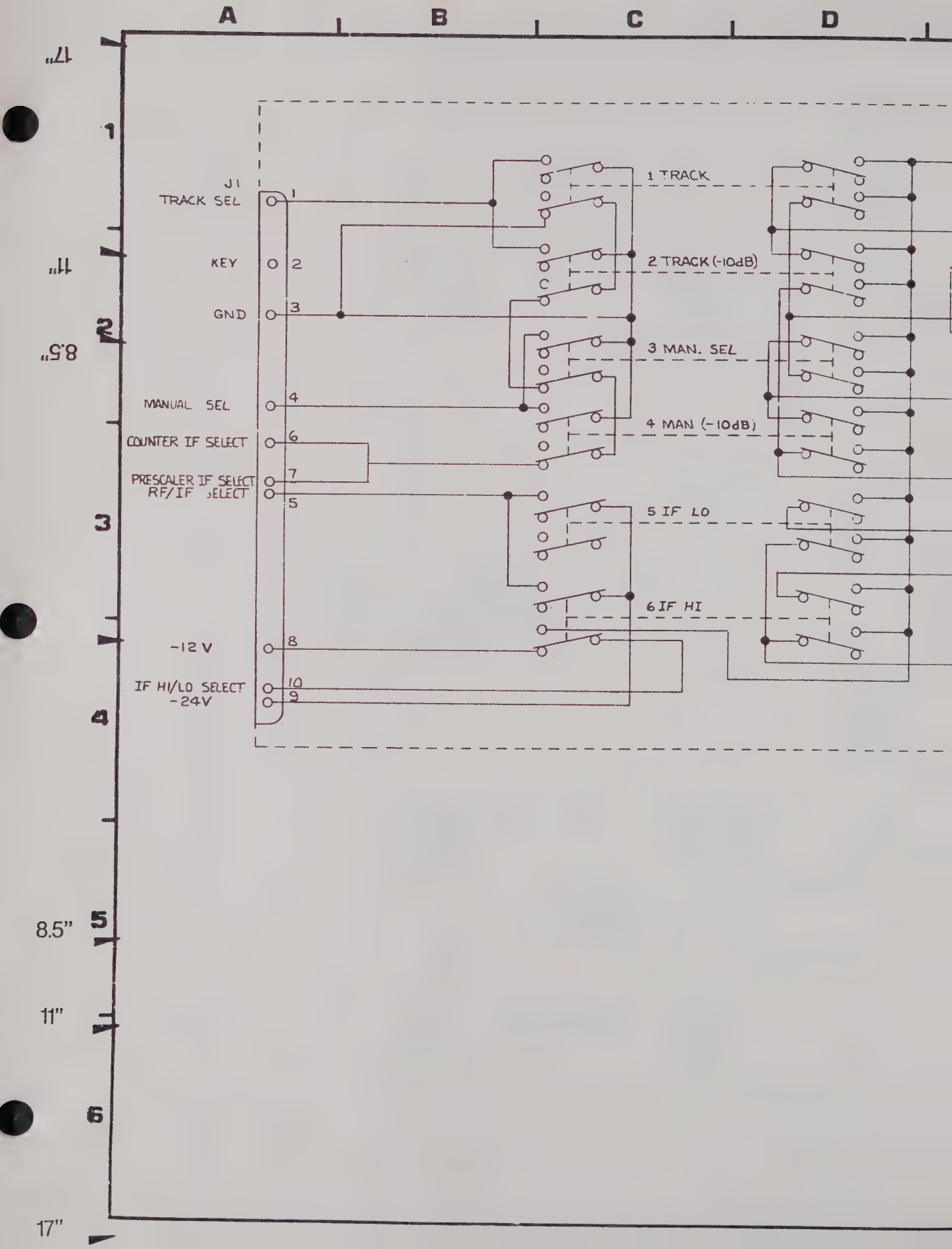
A
B
C
D
1
2
3
4
5
6
8.5"
11"
17"
J1
TRACK SEL
KEY
GND
MANUAL SEL
COUNTER IF SELECT
PRESCALER IF SELECT
RF/IF SELECT
-12 V
IF HI/LO SELECT
-24V
1
2
3
4
6
7
5
8
10
9
1 TRACK
2 TRACK (-10dB)
3 MAN. SEL
4 MAN (-10dB)
5 IF LO
6 IF HI

E F G H

DATE	REV	CHANGE	APVD
7/11/84	C	SEE HISTORY FILE	
10/11/84	D	REVISED ADD KEY POSITIONS.	
10-24-84	D	PRODUCTION RELEASE ECN 6490	VH

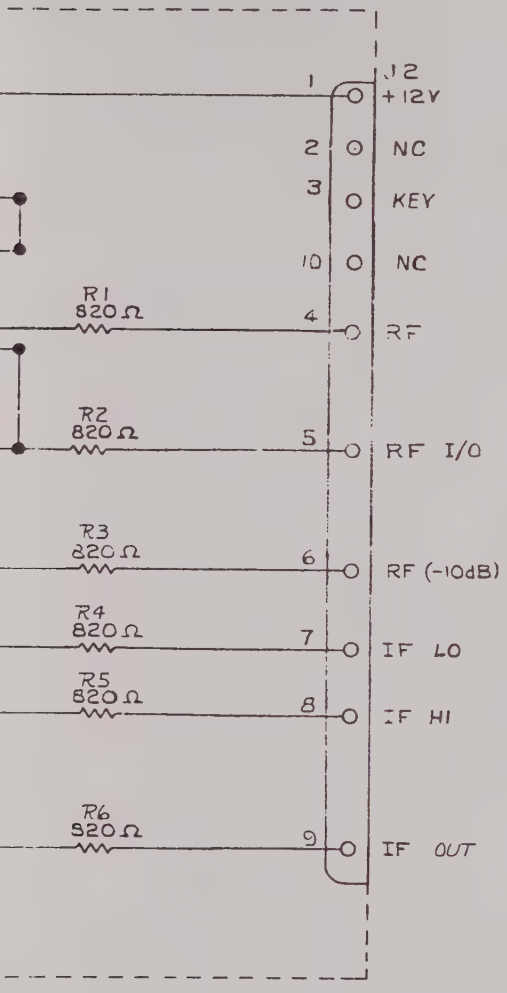

NOTES

1. ALL REF NO'S CARRY AN ASSIGNED DESIGNATOR SERIES. THIS SCHEMATIC CARRIES SERIES NO 27XXX. (e.g., R1 IS R27001)
2. ALL RESISTORS ARE 1/4 W. 10%.
3. ALL RESISTANCE EXPRESSED IN OHMS.
4. LAST REF NO USED:
   R6 J2

DASH NO	REF DES SERIES	NEXT ASSY	MODEL
	27XXX	1700-4920-700	RD-301

APPLICATION

UNLESS OTHERWISE SPECIFIED: ALL DIMENSIONS APPLY AFTER FINISH
TOLERANCES: DECIMALS: .xx ± .xxx ± FRACTIONS ± ANGLES: ± SURFACE FINISH √ REMOVE ALL BURRS DO NOT SCALE THIS DRAWING
MATERIAL
FINISH

-IFR INC- 10200 West York Street Wichita, Kansas 67215

DRAWN C. LYDAY DATE 6-4-84
CHECKED DATE
APPROVED Rick Young DATE 10-19-84

TITLE RF MODE SW BD SCHEMATIC (49-107)

SIZE C DWG. NO. 0000-4910-700 REV D

SCALE CODE IDENT 51190 WEIGHT SHEET 1 OF 1

17" 11" 8.5" 8.5" 11" 17"

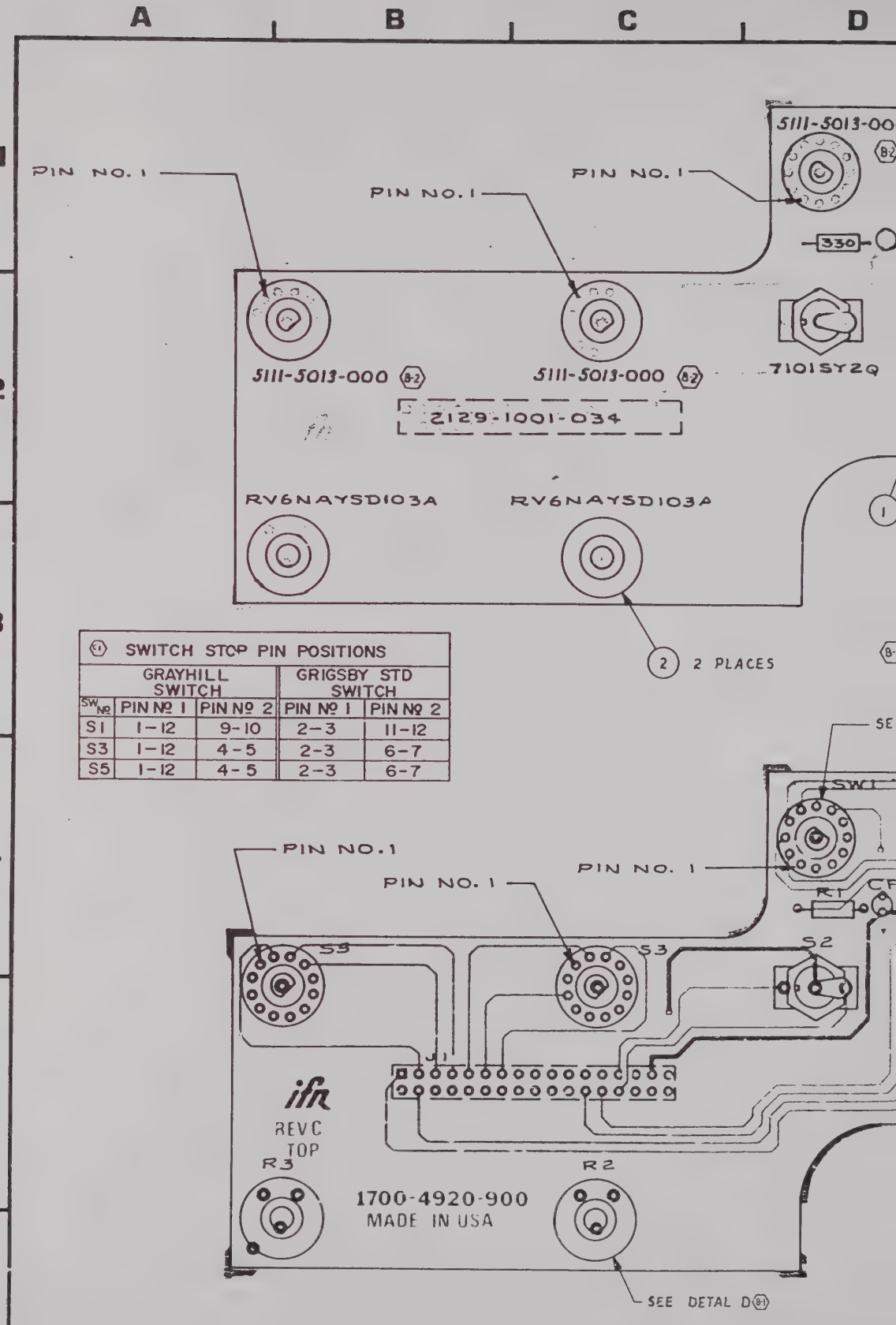
A
B
C
D
1
2
3
4
5
6
PIN NO. 1
PIN NO. 1
PIN NO. 1
5111-5013-00
330
5111-5013-000
5111-5013-000
7101SY2Q
2129-1001-034
RV6NAYSD103A
RV6NAYSD103A
2 PLACES
SWITCH STOP PIN POSITIONS
GRAYHILL SWITCH
GRIGSBY STD SWITCH
SW№ | PIN № 1 | PIN № 2 | PIN № 1 | PIN № 2
S1 | 1-12 | 9-10 | 2-3 | 11-12
S3 | 1-12 | 4-5 | 2-3 | 6-7
S5 | 1-12 | 4-5 | 2-3 | 6-7
PIN NO.1
PIN NO. 1
PIN NO. 1
S5
S3
S3
S2
J1
ifm
REVC
TOP
R3
R2
1700-4920-900
MADE IN USA
SEE DETAL D

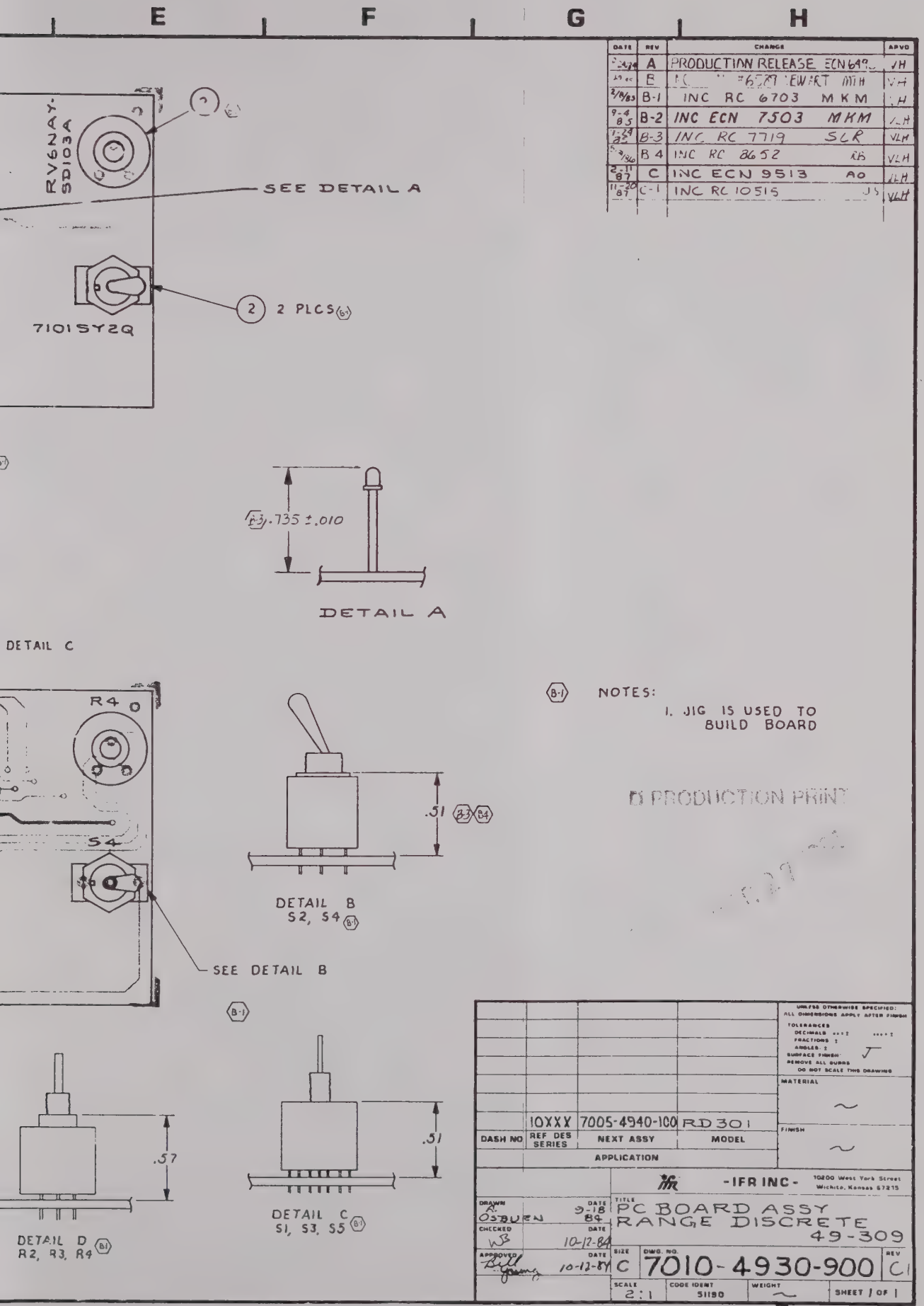
E
F
G
H
RV6NAY-SD103A
SEE DETAIL A
7101SY2Q
2 PLCS
.735 ±.010
DETAIL A
DETAIL C
R4
S4
.51
DETAIL B
S2, S4
SEE DETAIL B
.57
DETAIL D
R2, R3, R4
.51
DETAIL C
S1, S3, S5
NOTES:
1. JIG IS USED TO BUILD BOARD
PRODUCTION PRINT
UNLESS OTHERWISE SPECIFIED: ALL DIMENSIONS APPLY AFTER FINISH
TOLERANCES
DECIMALS
FRACTIONS
ANGLES
SURFACE FINISH
REMOVE ALL BURRS
DO NOT SCALE THIS DRAWING
MATERIAL
FINISH
10XXX
7005-4940-100
RD301
DASH NO
REF DES SERIES
NEXT ASSY
MODEL
APPLICATION
-IFR INC-
10200 West York Street
Wichita, Kansas 67215
DRAWN
R. OSBURN
DATE 9-18 84
CHECKED
WB
DATE 10-12-84
APPROVED
DATE 10-12-84
TITLE
PC BOARD ASSY
RANGE DISCRETE
49-309
SIZE C
DWG. NO. 7010-4930-900
REV C1
SCALE 2:1
CODE IDENT 51190
WEIGHT
SHEET 1 OF 1

ASSY NO.	REVISION	DESCRIPTION	LAST ECN	DATE INC
7010-4930-900	C1	PCB ASSY,RANGE DISCRETE	10515	11/19/87

STAT	REF.DES.	QTY	COMP. PART NO.	DESCRIPTION	EFFECTIVE
ACT		.00	DWG-0000-4910-900	DWG SCHEM,RANGE DISCRETE SW BD	00/00/00
ACT	*01	1.00	1700-4920-900	PC BD,RANGE DISCCRETE	00/00/00
ACT	*02	5.00	2800-3065-300	SPACER,AL,.37500,.27210,.062LG	00/00/00
ACT	CR22001	1.00	4818-0000-020	OPTO LED,HLMP-1301,RED	00/00/00
ACT	J22001	1.00	2129-1001-034	CONN, 34P LO PRF HDR SHORT ST*	00/00/00
ACT	R22001	1.00	4702-0331-003	RES, 5%, 1/4W 330 OHM *	00/00/00
ACT	R22002	3.00	4750-7615-100	POT, 10K OHM, RV6NAYSD103A .59	00/00/00
ACT	R22003	-.--	4750-7615-100	POT, 10K OHM, RV6NAYSD103A .59	00/00/00
ACT	R22004	-.--	4750-7615-100	POT, 10K OHM, RV6NAYSD103A .59	00/00/00
ACT	SW22001	3.00	5111-5013-000	SWITCH,ROT,PCM,SP,12POS, 30TA	00/00/00
ACT	SW22002	2.00	5120-0012-000	SWITCH TOG SPDT ON-ON PC	00/00/00
ACT	SW22003	-.--	5111-5013-000	SWITCH,ROT,PCM,SP,12POS, 30TA	00/00/00
ACT	SW22004	-.--	5120-0012-000	SWITCH TOG SPDT ON-ON PC	00/00/00
ACT	SW22005	-.--	5111-5013-000	SWITCH,ROT,PCM,SP,12POS, 30TA	00/00/00

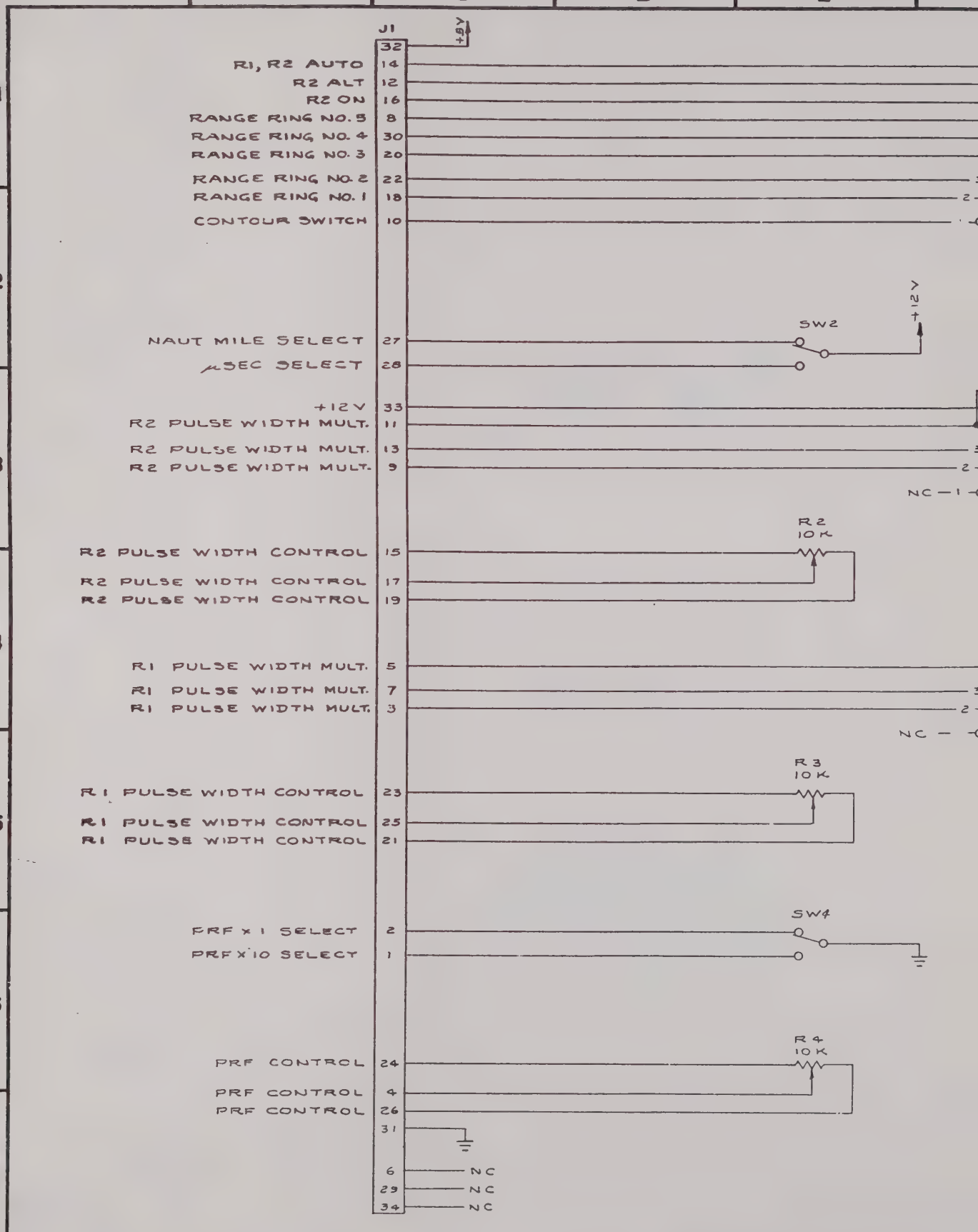
A
B
C
D
E
1
2
3
4
5
6
7
J1
+5V
32
R1, R2 AUTO
14
R2 ALT
12
R2 ON
16
RANGE RING NO. 5
8
RANGE RING NO. 4
30
RANGE RING NO. 3
20
RANGE RING NO. 2
22
RANGE RING NO. 1
18
CONTOUR SWITCH
10
+12V
SW2
NAUT MILE SELECT
27
μSEC SELECT
28
+12V
33
R2 PULSE WIDTH MULT.
11
R2 PULSE WIDTH MULT.
13
R2 PULSE WIDTH MULT.
9
NC
R2
10K
R2 PULSE WIDTH CONTROL
15
R2 PULSE WIDTH CONTROL
17
R2 PULSE WIDTH CONTROL
19
R1 PULSE WIDTH MULT.
5
R1 PULSE WIDTH MULT.
7
R1 PULSE WIDTH MULT.
3
NC
R3
10K
R1 PULSE WIDTH CONTROL
23
R1 PULSE WIDTH CONTROL
25
R1 PULSE WIDTH CONTROL
21
SW4
PRF x 1 SELECT
2
PRF x 10 SELECT
1
R4
10K
PRF CONTROL
24
PRF CONTROL
4
PRF CONTROL
26
31
6
NC
29
NC
34
NC

DATE	REV	CHANGE	APVD
[illegible]	A	PRODUCTION RELEASE ECN 6490	VH
[illegible]	B	INC ECN #6589 MTH	VH
2-11-87	C	INC ECN 9513 AO	VH

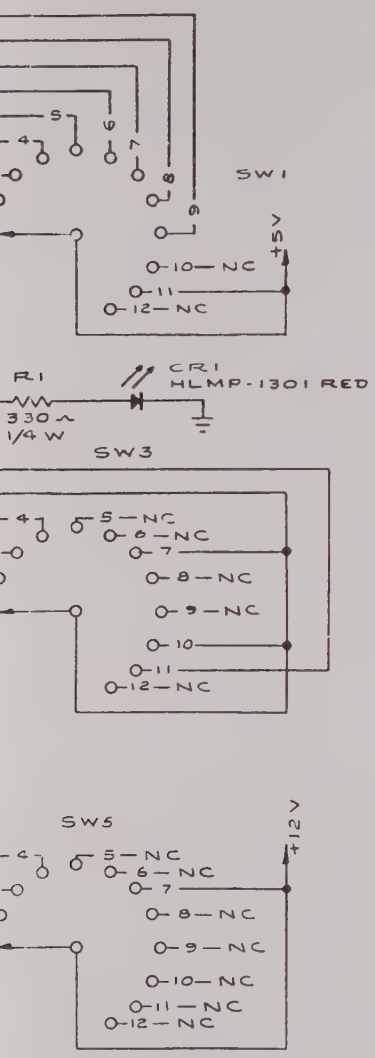

DASH NO	REF DES SERIES	NEXT ASSY	MODEL
	22XXX	1700-4920-900	RD-301

APPLICATION

UNLESS OTHERWISE SPECIFIED ALL DIMENSIONS APPLY AFTER FINISH
TOLERANCES
DECIMALS ±
FRACTIONS ±
ANGLES ±
SURFACE FINISH √
REMOVE ALL BURRS
DO NOT SCALE THIS DRAWING

MATERIAL —//—

FINISH —//—

-IFR INC- 10800 West York Street Wichita, Kansas 67215

DRAWN A. OSBURN DATE 9-18-84

CHECKED LD DATE 10-12-84

APPROVED [signature] DATE 10-12-84

TITLE RANGE DISCRETE CIRCUIT SCHEMATIC 49-109

SIZE D DWG NO 0000-4910-900 REV C

SCALE ~ CODE IDENT 51190 WEIGHT ~ SHEET 1 OF 1

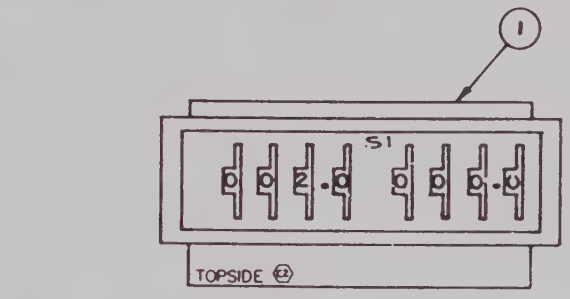
1
S1
TOPSIDE (E2)

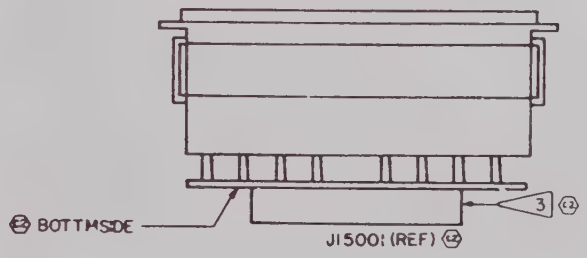
3 (E2)
(E2) BOTTMSIDE
J15001 (REF) (E2)

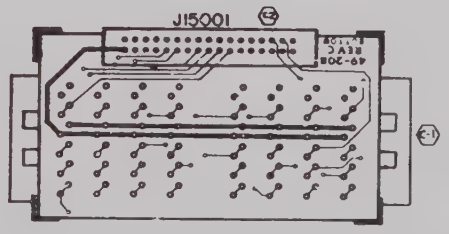
J15001 (E2)
(E1)

E F G H

DATE	REV	DESCRIPTION	APVD
	A	PROTOTYPE RELEASE	
	B	REVISED & REDRAWN	
2/6	C	ADD NEW ARTWORK	
10-30-84	C	PRODUCTION RELEASE ECN 6490	VH
2-15-85	C-1	INC RC 6879 RW	VLH
2/4/86	C-2	INC RC 9078 DAH	VLH

17"

11"

8.5"

NOTES

1. ALL REF NO'S CARRY AN ASSIGNED DESIGNATOR SERIES. THIS ASS'Y CARRIES SERIES 15XXX. (e.g. R1 IS R15001)
2. LAST REF NO USED
   J1 S1

(3) PIN 1 IS INDICATED BY SQUARE PAD.

8.5"

11"

17"

DASH NO	REF DES SERIES	NEXT ASSY	MODEL
	10XXX	7005-4940-100	RD-301

APPLICATION

UNLESS OTHERWISE SPECIFIED: ALL DIMENSIONS APPLY AFTER PLATING
TOLERANCES
DECIMALS .XX ± .1 .XXX ± .1
FRACTIONS ±
ANGLES ±
SURFACE FINISH √
REMOVE ALL BURRS
DO NOT SCALE THIS DRAWING

MATERIAL ~

FINISH ~

-IFR INC- 10200 West York Street Wichita, Kansas 67215

DRAWN A. OSBURN	DATE 9-7-84	
CHECKED WD	DATE 10-29-84	
APPROVED Bill Young	DATE 10-30-84	

TITLE PC BOARD ASSY-RANGE DIGIT SW BD 49-308

SIZE	DWG. NO.	REV
C	7010-4930-800	C-2

SCALE	CODE IDENT.	WEIGHT	SHEET
1:1	51190	~	1 OF 1

(13)

ASSY NO.	REVISION	DESCRIPTION	LAST ECN	DATE INC
7010-4930-800	C2	PCB ASSY, RANGE DIGIT SWITCH	RC 9078	09/29/86

STAT	REF.DES.	QTY	COMP. PART NO.	DESCRIPTION	EFFECTIVE
ACT		1.00	1700-4920-800	PC BD,RANGE DIGIT SWITCH	00/00/00
ACT		.00	DWG-0000-4910-800	DWG SCHEM,RANGE DIGIT SWITCH	00/00/00
ACT	J15001	1.00	2129-1001-034	CONN, 34P LO PRF HDR SHORT ST*	00/00/00
ACT	S15001	1.00	7105-5102-009	MECH ASSY,TW SW,RO-301 RANGE	00/00/00

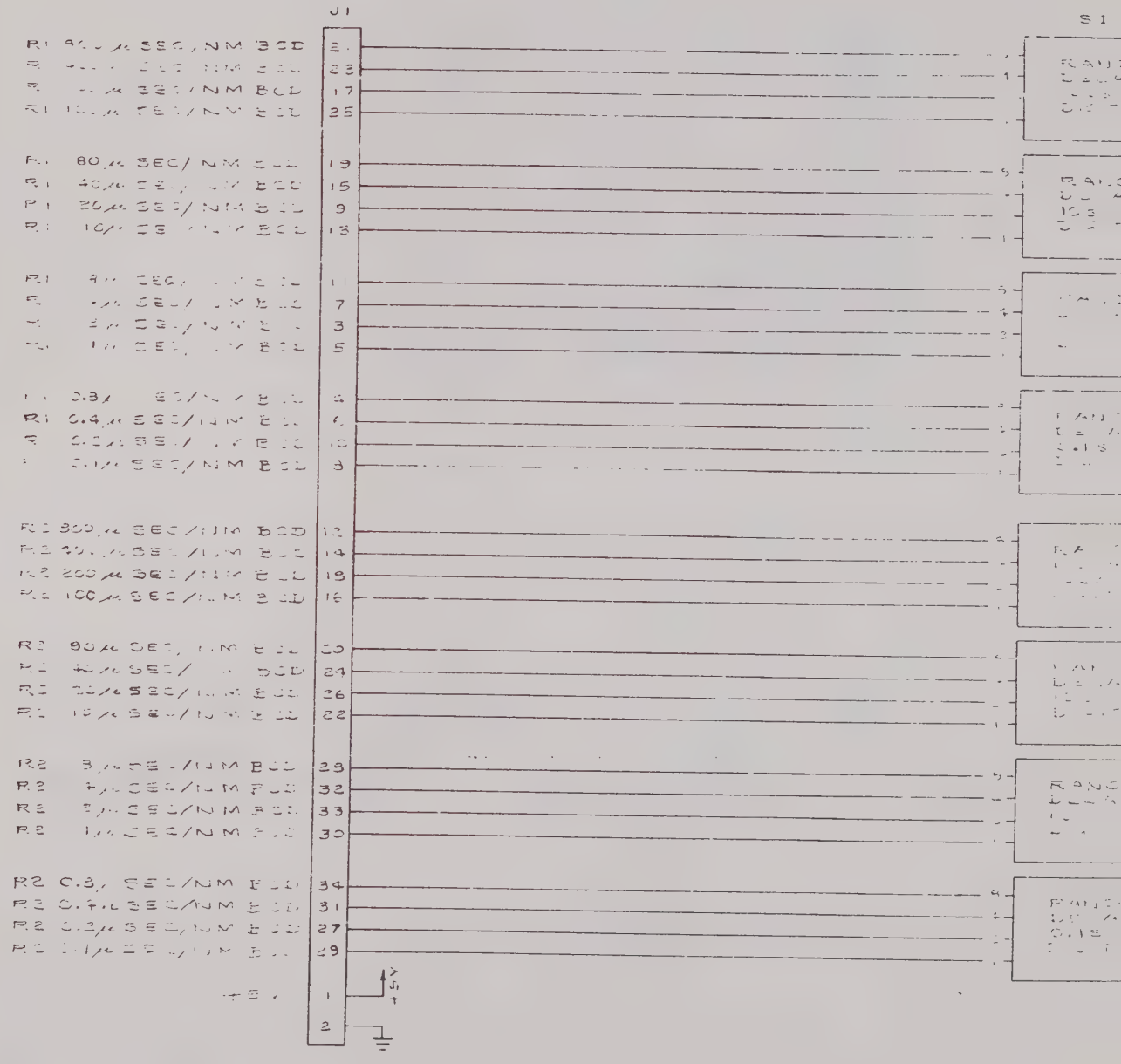
J1
S1
1
2

DATE	REV	CHANGE	APVD
	A	[illegible]	
[illegible]	B	REVISED & REDRAWN	[illegible]
[illegible]	C	ADDED NOTES	[illegible]
[illegible]	[illegible]	[illegible]	[illegible]

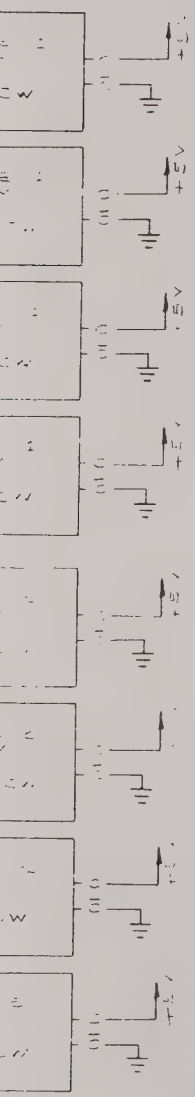

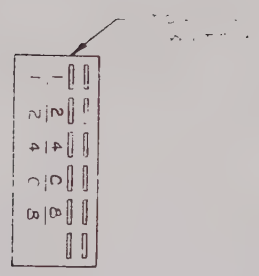

VIEW OF BACK
[illegible]
SECTION SHOWING
PIN NUMBERS

NOTES

1. ALL REF. NO's CARRY AN ASSIGNED DESIGNATOR SERIES. THIS SCHEMATIC CARRIES 15XXX. (e.g. R1 IS R1500.)
2. LAST REF. NO. USED
   J1 S1

DASH NO	REF DES SERIES	NEXT ASSY	MODEL
	5XXX	700-9720 300	RD-301

APPLICATION

UNLESS OTHERWISE SPECIFIED ALL DIMENSIONS APPLY AFTER FINISH
TOLERANCES
DECIMALS ±.XX ±.XXX
FRACTIONS ±
ANGLES ±
SURFACE FINISH √
REMOVE ALL BURRS
DO NOT SCALE THIS DRAWING

MATERIAL

FINISH

-IFR INC-
10200 West York Street
Wichita Kansas 67215

DRAWN [illegible]	DATE [illegible]	TITLE RANGE [illegible] SCHEMATIC [illegible]
CHECKED	DATE	
APPROVED Bill Young	DATE 10-30-74	SIZE [illegible] DWG NO [illegible] REV C
		SCALE [illegible] CODE IDENT 51190 WEIGHT [illegible] SHEET 1 OF 1

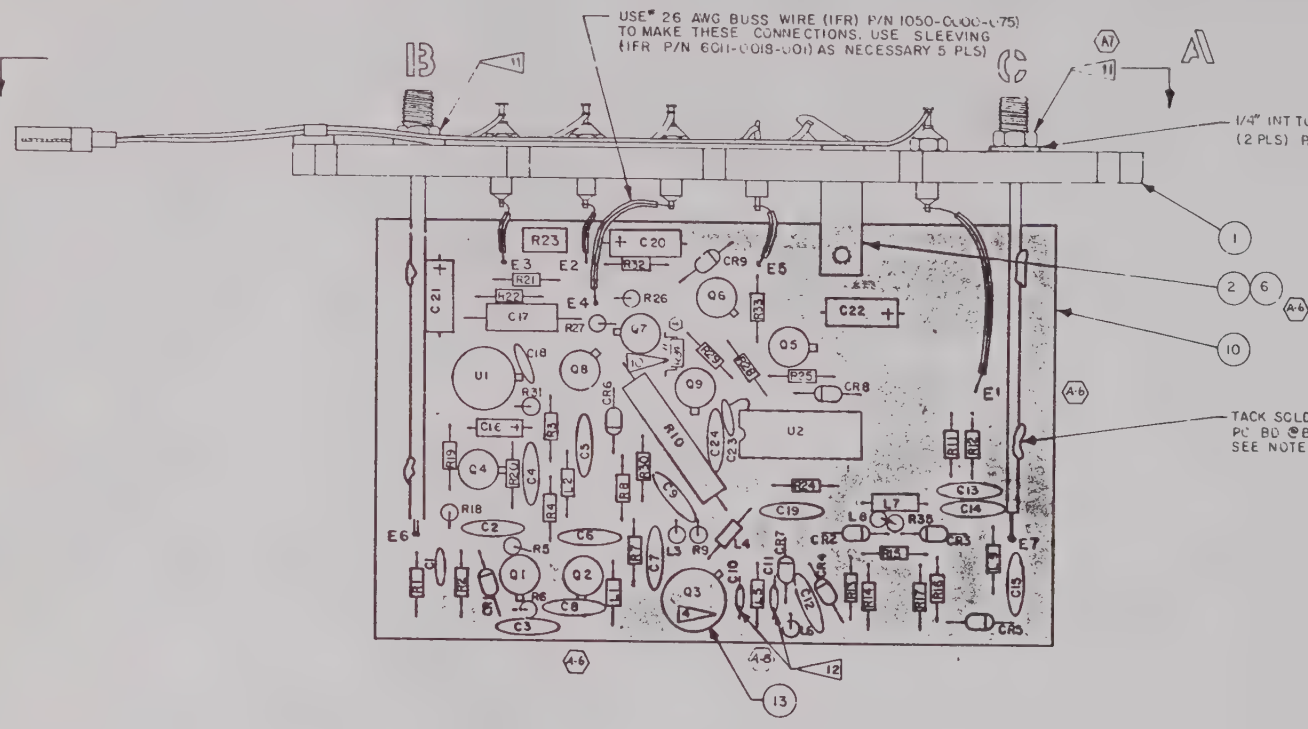

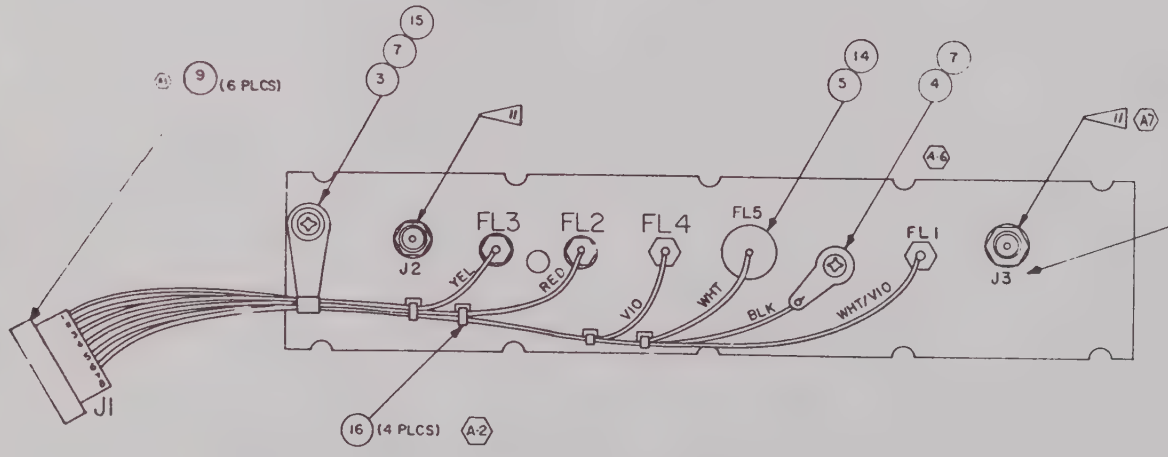

VIEW A1 – A1

WIRING LIST				
FROM	TO	COLOR	SIZE	LG
J1-1	GND LUG	BLACK	26	3 1/2
J1-2	FL-4	VIOLET	26	4 1/2
J1-3	FL-3	YELLOW	26	3 1/2
J1-4	FL-2	RED	26	4
J1-5	,	WHITE	26	5
J1-6	FL-1	WHITE/VIO	26	6
J1-7	NC	——	—	—
J1-8	NC	——	—	—

DATE	REV	CHANGE	APVD
1/25/85	A	PRODUCTION RELEASE ECN 6490	VH
3/26/85	A	REDRAWN NO CHANGE	VLH
4-2-85	A-1	INC RC 6825 RW	VLH
8-27-85	A-2	INC RC 7508 MKM	VLH
[illegible]	A-3	INC RC 7701 SLR	VLH
1/4/86	A-4	INC RC 8097 & RC 8220 DAH	JS
2-18-87	A-5	INC ECN 9450 AO	VLH
3-18-87	A-6	INC ECN 9616 AO	VLH
6-8-88	A7	INC RC 11207 JR	EP
8-12-88	A-8	INC RC 11494 AO	[illegible]

H LOCKWASHER

COAX ASSY TO
H ENDS.

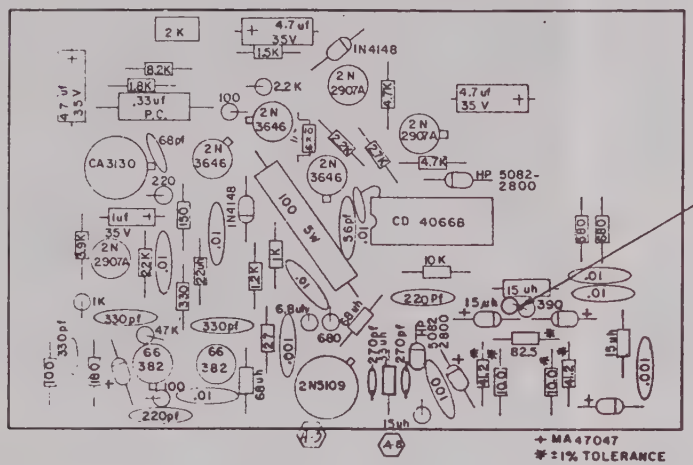

MID AIR CONNECTION (A-5)

+ MA47047
* ±1% TOLERANCE

DENTIFICATION
TG BD DESIGNATIONS)

CHECKOUT PROCEDURE

CHECK FOR PROPER COAX CONTINUITY AFTER COMPLETION OF THE BOARD AS FOLLOWS:

1. USE A "MIDLAND" VOM MODEL 23-107 OR SIMILAR.
2. SELECT THE "R×1" SETTING ON THE METER & CHECK TO SEE THAT THE METER IS PROPERLY ZEROED ON BOTH ENDS OF THE SCALE.
3. PLACE THE + (RED) LEAD ON THE CENTER CONDUCTOR OF THE CONNECTOR & THE COMMON (BLACK) LEAD ON THE COAX CENTER CONDUCTOR WERE IT ENTERS THE PC BD. THIS SHOULD OBTAIN A READING OF 0Ω W/ BOTH COAX CABLES.
4. PLACE THE + (RED) LEAD ON THE CENTER CONDUCTOR OF THE CONNECTOR & THE COMMON (BLACK) LEAD ON THE LARGE COPPER AREA ON TOP OF THE BD (GND). WITH COAX "B", THIS SHOULD OBTAIN A READING OF 85-115 Ω. WITH COAX "C," THIS SHOULD OBTAIN NO READING AT ALL.

NOTES:

1. REFER TO ASSY PROCEDURE Nº1-34-0100-2 FOR PROPER RIGID COAX ASSY INSTRUCTIONS. INSPECT PER CHECKOUT PROCEDURE LISTED ELSEWHERE ON THIS DWG.
2. ATTACH RIGID COAX ASSY's TO PC BD AS FOLLOWS:
   a. LIGHTLY SAND OUTER JACKET OF COAX w/ 400 GRIT SANDPAPER TO REMOVE OXIDATION & OTHER CONTAMINATES.
   b. SOLDER COAX JACKET TO P.C. BOARD USING NO MORE THAN ABOUT A 40w SOLDERING IRON & HEAT COAX FOR AS SHORT A PERIOD OF TIME AS POSSIBLE. LIQUID FLUX MAY BE USED IF NECESSARY DO NOT USE SOLDERING PASTE.
3. DELETED
4. ANNOTATED PART TO HAVE HEAT SINK (ITEM 13).
5. REF DESIGNATOR SERIES FOR COMPONENTS LISTED ON THIS DWG IS 36XXX. (i.e. R11 = R36011 CR9 = CR36009, etc.)
6. (A-3) ALL RESISTORS ARE 1/4W, 5% TOL UNLESS OTHERWISE SPECIFIED.
7. ALL CAPACITOR VALUES ARE IN uf UNLESS OTHERWISE SPECIFIED.
8. LEADS TO EXTEND .040-.060 BEYOND BTM OF BD AFTER SOLDERING
9. MAX HT OF COMPONENTS TO BE .375 FROM COMPONENT SIDE OF BD.
10. (A-8) CUT PATH THEN ADD R34.10K.1/8W TO PATH.
11. (A7) TORQUE TO 15 INCH LBS., J2 & J3.
12. (A-8) INVERT CAPS BEFORE INSTALLATION TO PREVENT SHORT TO GND PLANE.

DASH NO	REF DES SERIES	NEXT ASSY	MODEL
-500	36000	7003-4940-000	RD-301 (A-1)

APPLICATION

-IFR INC-

DRAWN R.W. & L.M. DATE 3/25/85
CHECKED VLH DATE 3/25/85
APPROVED [signature] DATE 3/26/85

TITLE PC BOARD ASSEMBLY IF GEN PWR AMP RD 301

SIZE D DWG. NO. 7010-4931-500 REV A-8

SCALE 2:1 CODE IDENT 51100 WEIGHT — SHEET 1 OF 1

D PRODUCTION PRINT
DEC 27 1991

ASSY NO.	REVISION	DESCRIPTION	LAST ECN	DATE INC
7010-4931-500	A8	PCB ASSY,IF GEN PWR AMP,R0-301	11494	08/11/88

STAT	REF.DES.	QTY	COMP. PART NO.	DESCRIPTION		EFFECTIVE
ACT		.42	6003-0000-001	WIRE,HOOK,TFE,26GA, 7S,BLACK		00/00/00
ACT		.33	6003-0000-003	WIRE,HOOK,TFE,26GA, 7S,RED		00/00/00
ACT		.29	6003-0000-005	WIRE,HOOK,TFE,26GA, 7S,YELLOW		00/00/00
ACT		.50	6003-0000-008	WIRE,HOOK,TFE,26GA, 7S,VIOLET		00/00/00
ACT		.42	6003-0000-010	WIRE,HOOK,TFE,26GA, 7S,WHITE		00/00/00
ACT		.50	6003-0000-018	WIRE,HOOK,TFE,26GA, 7S,WHT/VIO		00/00/00
ACT		.00	DWG-0000-4911-500	DWG SCHEM,IF GENERATOR		00/00/00
ACT	*01	1.00	2506-2515-400	PLATE MOUNTING	2	00/00/00
ACT	*02	1.00	1400-2516-400	BRACKET MOUNTING	1	00/00/00
ACT	*03	1.00	2109-0000-007	CLAMP CABLE TYRAP TY34M.8		00/00/00
ACT	*04	1.00	2850-0000-031	LUG,GND,4		00/00/00
ACT	*05	1.00	2801-0125-001	SCREW 2-56 X 1/8 SHSS		00/00/00
ACT	*06	1.00	2803-0250-006	SCREW,4-40 X 1/4 PPHM		00/00/00
ACT	*07	2.00	2803-0313-006	SCREW,4-40 X 5/16 PPHM		00/00/00
ACT	*09	6.00	2114-9001-001	CONTACT PIN26-22GA.SYM001T0.6*		87/03/12
ACT	*10	1.00	1700-2507-000	BD PC	1	00/00/00
ACT	*13	1.00	5400-0000-002	HEAT SINK,TO-5 TRANS		00/00/00
ACT	*14	1.00	2501-7600-118	SPACER,BR,.312OD,.203ID,.125LG		00/00/00
ACT	*15	1.00	2840-0000-008	WASHER,FLAT,4,AN960-C4		00/00/00
ACT	*16	4.00	6004-6005-400	TY-RAP,4.0 LG		00/00/00
ACT	C25	1.00	0002-0000-000	*** REF DESIG NOT USED ***		00/00/00
ACT	C36001	3.00	1501-0331-001	CAP,PF 330, 1000V,DISC, 10		00/00/00
ACT	C36002	-.--	1501-0331-001	CAP,PF 330, 1000V,DISC, 10		00/00/00
ACT	C36003	2.00	1501-0221-001	CAP,PF 220, 1000V,DISC, 10		00/00/00
ACT	C36004	7.00	1501-0103-005	CAP,UF .010, 50V,DISC, 10		00/00/00
ACT	C36005	-.--	1501-0103-005	CAP,UF .010, 50V,DISC, 10		00/00/00

ASSY NO.	REVISION	DESCRIPTION	LAST ECN	DATE INC
7010-4931-500	A8	PCB ASSY,IF GEN PWR AMP,RO-301	11494	08/11/88

STAT	REF.DES.	QTY	COMP. PART NO.	DESCRIPTION	EFFECTIVE
ACT	C36006	-.--	1501-0331-001	CAP,PF 330, 1000V,DISC, 10	00/00/00
ACT	C36007	3.00	1501-0102-001	CAP,PF 1000, 600V,DISC, 10	00/00/00
ACT	C36008	-.--	1501-0103-005	CAP,UF .010, 50V,DISC, 10	00/00/00
ACT	C36009	-.--	1501-0103-005	CAP,UF .010, 50V,DISC, 10	00/00/00
ACT	C36010	2.00	1506-0271-017	CAP,PF 270, 100V,NPO, 5	00/00/00
ACT	C36011	-.--	1506-0271-017	CAP,PF 270, 100V,NPO, 5	00/00/00
ACT	C36012	-.--	1501-0102-001	CAP,PF 1000, 600V,DISC, 10	00/00/00
ACT	C36013	-.--	1501-0103-005	CAP,UF .010, 50V,DISC, 10	00/00/00
ACT	C36014	-.--	1501-0103-005	CAP,UF .010, 50V,DISC, 10	00/00/00
ACT	C36015	-.--	1501-0102-001	CAP,PF 1000, 600V,DISC, 10	00/00/00
ACT	C36016	1.00	1507-0105-018	CAP,uF 1.0, 35V,TANT, 20 *	00/00/00
ACT	C36017	1.00	1502-0334-012	CAP,UF, .33, 50V,MPC, 5 *	00/00/00
ACT	C36018	1.00	1501-0680-001	CAP,PF 68, 1000V,DISC, 10	00/00/00
ACT	C36019	-.--	1501-0221-001	CAP,PF 220, 1000V,DISC, 10	00/00/00
ACT	C36020	3.00	1507-0475-018	CAP,uF 4.7, 35V,TANT, 20 *	00/00/00
ACT	C36021	-.--	1507-0475-018	CAP,uF 4.7, 35V,TANT, 20 *	00/00/00
ACT	C36022	-.--	1507-0475-018	CAP,uF 4.7, 35V,TANT, 20 *	00/00/00
ACT	C36023	-.--	1501-0103-005	CAP,UF .010, 50V,DISC, 10	00/00/00
ACT	C36024	1.00	1501-0560-001	CAP,PF 56, 1000V,DISC, 10	00/00/00
ACT	CR36001	5.00	4828-0000-002	DIODE,PIN,.3 PF,100 NS	00/00/00
ACT	CR36002	-.--	4828-0000-002	DIODE,PIN,.3 PF,100 NS	00/00/00
ACT	CR36003	-.--	4828-0000-002	DIODE,PIN,.3 PF,100 NS	00/00/00
ACT	CR36004	-.--	4828-0000-002	DIODE,PIN,.3 PF,100 NS	00/00/00
ACT	CR36005	-.--	4828-0000-002	DIODE,PIN,.3 PF,100 NS	00/00/00
ACT	CR36006	2.00	4815-0000-003	DIODE, 1N4148 ,SIGNAL, 75PRV	00/00/00
ACT	CR36007	2.00	4816-0000-001	DIODE,5082-2800,S BAR, 70VBR	00/00/00

ASSY NO.	REVISION	DESCRIPTION	LAST ECN	DATE INC
7010-4931-500	A8	PCB ASSY,IF GEN PWR AMP,RD-301	11494	08/11/88

STAT	REF.DES.	QTY	COMP. PART NO.	DESCRIPTION	EFFECTIVE
ACT	CR36008	-.--	4816-0000-001	DIODE,5082-2800,S BAR, 70VBR	00/00/00
ACT	CR36009	-.--	4815-0000-003	DIODE, 1N4148 ,SIGNAL, 75PRV	00/00/00
ACT	FL36001	4.00	5801-0000-006	FILTER,EMI/RFI 1500pF 8-32DIA*	00/00/00
ACT	FL36002	-.--	5801-0000-006	FILTER,EMI/RFI 1500pF 8-32DIA*	00/00/00
ACT	FL36003	-.--	5801-0000-006	FILTER,EMI/RFI 1500pF 8-32DIA*	00/00/00
ACT	FL36004	-.--	5801-0000-006	FILTER,EMI/RFI 1500pF 8-32DIA*	00/00/00
ACT	FL36005	1.00	1526-0000-002	CAP,PF 47, 500V,FEEDTHRU	00/00/00
ACT	J36001	1.00	2115-9001-008	CONN,RECT.098 RCPT 8-P,SMR08VB	00/00/00
ACT	J36002	2.00	6042-0016-706	COAX ASSY,086,IF GEN/AMP BD	00/00/00
ACT	J36003	-.--	6042-0016-706	COAX ASSY,086,IF GEN/AMP BD	00/00/00
ACT	L36001	3.00	1801-0689-001	IND, 6.8 UH, 2 OHM,1025-40	00/00/00
ACT	L36002	1.00	1801-0022-001	IND, 22uH 3.3 OHM 1025-52 *	00/00/00
ACT	L36003	-.--	1801-0689-001	IND, 6.8 UH, 2 OHM,1025-40	00/00/00
ACT	L36004	-.--	1801-0689-001	IND, 6.8 UH, 2 OHM,1025-40	00/00/00
ACT	L36005	1.00	1801-0338-001	IND, .33UH,.2 OHM,1025-08	00/00/00
ACT	L36006	4.00	1801-0015-001	IND, 15 UH,2.8OHM,1025-48	00/00/00
ACT	L36007	-.--	1801-0015-001	IND, 15 UH,2.8OHM,1025-48	00/00/00
ACT	L36008	-.--	1801-0015-001	IND, 15 UH,2.8OHM,1025-48	00/00/00
ACT	L36009	-.--	1801-0015-001	IND, 15 UH,2.8OHM,1025-48	00/00/00
ACT	Q36001	2.00	4809-0000-005	TRANS,66382 ,NPN HF AMP	00/00/00
ACT	Q36002	-.--	4809-0000-005	TRANS,66382 ,NPN HF AMP	00/00/00
ACT	Q36003	1.00	4803-0000-003	TRANS, 2N5109 ,NPN PWR HF AMP	00/00/00
ACT	Q36004	3.00	4805-0000-001	TRANS,2N2907A,PNP HS SW (3251)	00/00/00
ACT	Q36005	-.--	4805-0000-001	TRANS,2N2907A,PNP HS SW (3251)	00/00/00
ACT	Q36006	-.--	4805-0000-001	TRANS,2N2907A,PNP HS SW (3251)	00/00/00
ACT	Q36007	3.00	4805-0000-003	TRANS, 2N3646 ,NPN HS SW	00/00/00

ASSY NO.	REVISION	DESCRIPTION	LAST ECN	DATE INC
7010-4931-500	A8	PCB ASSY,IF GEN PWR AMP,RO-301	11494	08/11/88

STAT	REF.DES.	QTY	COMP. PART NO.	DESCRIPTION			EFFECTIVE
ACT	Q36008	-.--	4805-0000-003	TRANS, 2N3646 ,NPN HS SW			00/00/00
ACT	Q36009	-.--	4805-0000-003	TRANS, 2N3646 ,NPN HS SW			00/00/00
ACT	R36001	3.00	4702-0101-003	RES, 5, 1/4W,	100 OHM		00/00/00
ACT	R36002	1.00	4702-0181-003	RES, 5, 1/4W,	180 OHM		00/00/00
ACT	R36003	1.00	4702-0151-003	RES, 5, 1/4W,	150 OHM		00/00/00
ACT	R36004	1.00	4702-0331-003	RES, 5%, 1/4W	330 OHM	*	00/00/00
ACT	R36005	1.00	4702-0473-003	RES, 5%, 1/4W	47K OHM	*	00/00/00
ACT	R36006	-.--	4702-0101-003	RES, 5, 1/4W,	100 OHM		00/00/00
ACT	R36007	1.00	4702-0270-003	RES, 5, 1/4W	27 OHM	*	00/00/00
ACT	R36008	1.00	4702-0122-003	RES, 5, 1/4W,	1.2K OHM		00/00/00
ACT	R36009	3.00	4702-0681-003	RES, 5, 1/4W,	680 OHM		00/00/00
ACT	R36010	1.00	4709-0101-003	RES, 5, 5W,	100 OHM,WW		00/00/00
ACT	R36011	-.--	4702-0681-003	RES, 5, 1/4W,	680 OHM		00/00/00
ACT	R36012	-.--	4702-0681-003	RES, 5, 1/4W,	680 OHM		00/00/00
ACT	R36013	2.00	4706-4129-001	RES, 1, 1/4W,	41.2 OHM		00/00/00
ACT	R36014	2.00	4706-1009-001	RES, 1, 1/4W,	10.0 OHM		00/00/00
ACT	R36015	1.00	4706-8259-001	RES, 1, 1/4W,	82.5 OHM		00/00/00
ACT	R36016	-.--	4706-4129-001	RES, 1, 1/4W,	41.2 OHM		00/00/00
ACT	R36017	-.--	4706-1009-001	RES, 1, 1/4W,	10.0 OHM		00/00/00
ACT	R36018	2.00	4702-0102-003	RES, 5, 1/4W,	1.0K OHM		00/00/00
ACT	R36019	1.00	4702-0392-003	RES, 5, 1/4W,	3.9K OHM		00/00/00
ACT	R36020	3.00	4702-0222-003	RES, 5%, 1/4W	2.2K OHM	*	00/00/00
ACT	R36021	1.00	4702-0822-003	RES, 5, 1/4W,	8.2K OHM		00/00/00
ACT	R36022	1.00	4702-0182-003	RES, 5, 1/4W,	1.8K OHM		00/00/00
ACT	R36023	1.00	4753-0202-002	POT, 2K OHM			00/00/00
ACT	R36024	1.00	4702-0103-003	RES,5, 1/4W	10K OHM	*	00/00/00

ASSY NO.	REVISION	DESCRIPTION	LAST ECN	DATE INC
7010-4931-500	A8	PCB ASSY,IF GEN PWR AMP,RD-301	11494	08/11/88

STAT	REF.DES.	QTY	COMP. PART NO.	DESCRIPTION			EFFECTIVE
ACT	R36025	2.00	4702-0472-003	RES, 5, 1/4W,	4.7K	OHM	00/00/00
ACT	R36026	-.--	4702-0222-003	RES, 5%, 1/4W	2.2K OHM	*	00/00/00
ACT	R36027	-.--	4702-0101-003	RES, 5, 1/4W,	100	OHM	00/00/00
ACT	R36028	1.00	4702-0272-003	RES, 5%, 1/4W	2.7K OHM	*	00/00/00
ACT	R36029	-.--	4702-0222-003	RES, 5%, 1/4W	2.2K OHM	*	00/00/00
ACT	R36030	-.--	4702-0102-003	RES, 5, 1/4W,	1.0K	OHM	00/00/00
ACT	R36031	1.00	4702-0221-003	RES, 5, 1/4W 220 OHM		*	00/00/00
ACT	R36032	1.00	4702-0152-003	RES, 5, 1/4W,	1.5K	OHM	00/00/00
ACT	R36033	-.--	4702-0472-003	RES, 5, 1/4W,	4.7K	OHM	00/00/00
ACT	R36034	1.00	4701-0103-003	RES, 5, 1/8W, 10K OHM		*	00/00/00
ACT	R36035	1.00	4702-0391-003	RES,5, 1/4W 390 OHM		*	87/02/05
ACT	U36001	1.00	3133-0000-014	IC,3130,BIMOS OP AMP,METAL CAN			00/00/00
ACT	U36002	1.00	3133-0000-007	IC,4066B,QUAD BILATERAL SWITCH			00/00/00

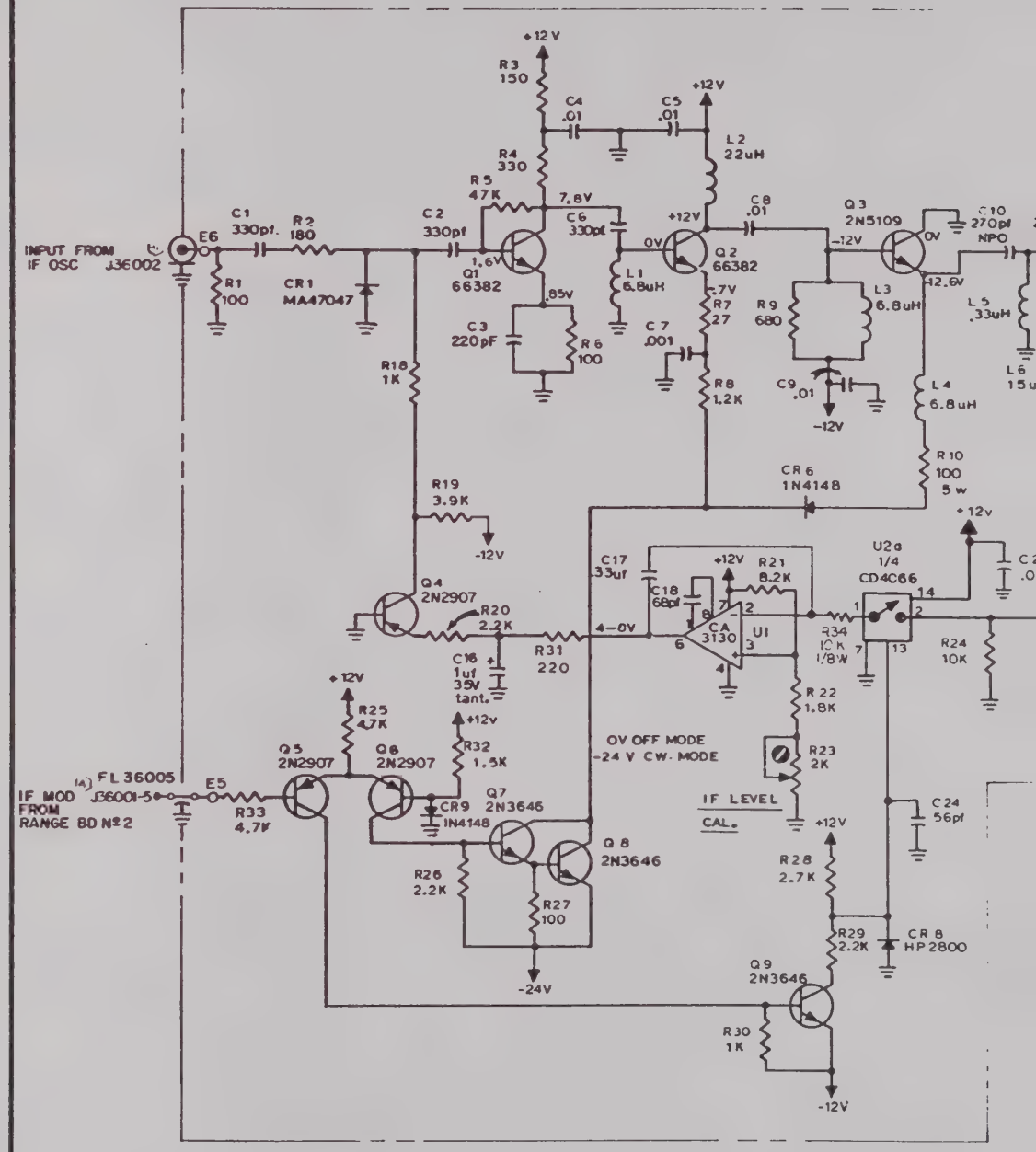
INPUT FROM IF OSC J36002
E6
C1 330pf.
R2 180
R1 100
CR1 MA47047
C2 330pf
+12V
R3 150
C4 .01
C5 .01
L2 22uH
R4 330
R5 47K
7.8V
C6 330pf
Q1 66382
1.6V
.85V
C3 220pF
R6 100
L1 6.8uH
Q2 66382
0V
-.7V
R7 27
C7 .001
R8 1.2K
C8 .01
Q3 2N5109
-12V
C10 270pf NPO
12.6V
R9 680
L3 6.8uH
C9 .01
L4 6.8uH
L5 .33uH
L6 15u
R10 100 5w
CR6 1N4148
R18 1K
R19 3.9K
Q4 2N2907
R20 2.2K
C16 1uf 35V tant.
R31 220
4-0V
C17 33uf
C18 68pf
CA 3130
U1
R21 8.2K
R22 1.8K
R23 2K
IF LEVEL CAL.
U2a 1/4 CD4066
R34 10K 1/8W
R24 10K
C24 56pf
OV OFF MODE
-24 V CW MODE
FL 36005
IF MOD FROM RANGE BD Nº2
J36001-5
E5
R33 4.7V
Q5 2N2907
Q6 2N2907
R25 4.7K
R32 1.5K
CR9 1N4148
Q7 2N3646
Q8 2N3646
R26 2.2K
R27 100
-24V
R28 2.7K
R29 2.2K
CR8 HP2800
Q9 2N3646
R30 1K

DATE	REV	CHANGE	APP'D
9-5	A	PRODUCTION RELEASE	V4
2-18-87	A-2	INC ECN 9450 AO	
3-18-87	A-3	INC ECN 3616 AO	WH

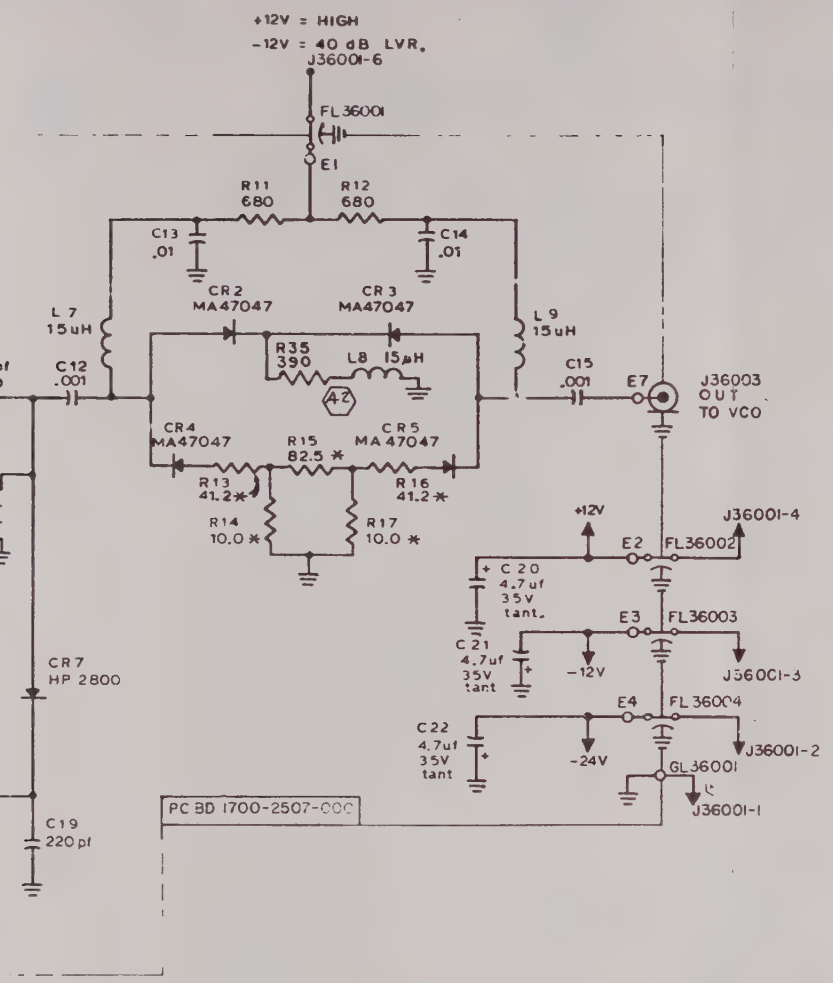

NOTE:

1. Res. are in ohms & (*) notes 1%.
2. Caps. are in uf unless noted.
3. LAST USED NO.

X 2	J3
Q 9	FL5
R35	E7
C25	
CR9	
L9	

4. ALL COMPONENTS HAVE THE REFERENCE DESIGNATOR SERIES 36XXX (i.e. R1=R36001, C12=C36012, etc.).
5. ALL FEEDTHRU CAPACITORS ARE TO BE 1500pf UNLESS OTHERWISE SPECIFIED.
6. REF DES. NOT USED
   C25

DRAWN: L. A. Meis, Jr.	DATE: 02Jan85	TITLE: SCHEMATIC IF GEN POWER AMP RD 301	
CHECKED:	DATE: 1-3-85		
APPROVED:	DATE: 1-3-85		
RELEASED:	DATE:	PART NO: 0000-4911-500	
MODEL: RD 301		SCALE:	SHEET 1 OF 1 REV: A 3

(11)

APPENDIX A - I/O CONNECTORS AND PIN-OUT TABLE

CONNECTOR	SIGNAL NAME	TYPE	INPUT/OUTPUT	SIGNAL TYPE
J49002	AUX X-BAND	SMA	OUTPUT	RF (X-Band)
J49003	ANLYZER RF X-BAND XMTR	N	OUTPUT	Attenuated Radar UUT Signal
J49004	VCO L-BAND	SMA	OUTPUT	RF (L-Band)
J49005	AM EXT	BNC	INPUT	External AM
J49006	FM EXT	BNC	INPUT	External FM
J49007	50% VIDEO XMTR	BNC	OUTPUT	TTL Video
J49008	AC	Plug	INPUT	ac Line Power
J49012	IF SCP SWP	BNC	OUTPUT	5 V_{P-P}, 100 Hz
J49016	X-BAND	N	INPUT/OUTPUT	RF (X-Band)
J49020	TEST VIDEO	BNC	INPUT	External Pulse
J49021	TEST RF	BNC	INPUT	RF (L-Band)
J49022	SYNC	BNC	OUTPUT	TTL
J49023	DLYD SYNC	BNC	OUTPUT	TTL
J49024	EXT TRIG	BNC	OUTPUT	2 to 25 V_P Pulse or Sine Wave
J49025	IF	BNC	OUTPUT	IF
J49026	XMTR DET	BNC	OUTPUT	Detected Radar UUT Pulse Signal
J49027	XMTR DSCRM .1V/MHz	BNC	OUTPUT	Reference Pulse (Amplitude Reflects UUT Frequency)
J49028	XMTR HET MON	BNC	OUTPUT	Radar UUT Pulse Modulation

THIS PAGE INTENTIONALLY BLANK.

APPENDIX B - R1,R2 AUTO THRESHOLD ADJUSTMENT

1. General

When the RANGE SEL Switch is set to ***R1,R2 AUTO***, Range 1 or Range 2 reply is selected according to the width of the UUT transmitter pulse. The R1,R2 AUTO threshold adjustment on the Discriminator #1 PC Board sets the determining width. When the UUT transmitter pulse width is > the determining width, only Range 2 reply is selected. When the UUT transmitter pulse width is < the determining width, only Range 1 reply is selected. The determining width is calibrated to 0.4 µs. When a different determining width is desired, perform the R1,R2 AUTO Threshold Procedure.

2. R1,R2 AUTO Threshold Procedure

TEST EQUIPMENT 1 Oscilloscope
1 Pulse Generator

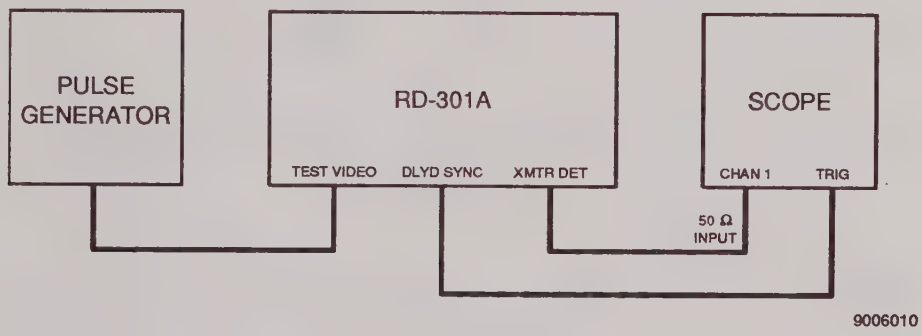

R1,R2 AUTO Threshold Set Hook-Up Diagram
Figure 1

STEP	PROCEDURE
1.	Remove four screws and top cover from RD-301A.
2.	Connect test equipment as shown in Appendix B, Figure 1.
3.	Adjust Pulse Generator for desired determining pulse width (0.2 to 1.0 µs) at approximately +3 V_P.
4.	Set Oscilloscope to view Range 1 or Range 2 reply delay.

STEP PROCEDURE

5. Refer to Appendix B, Figure 2 and adjust R50012 fully cw.

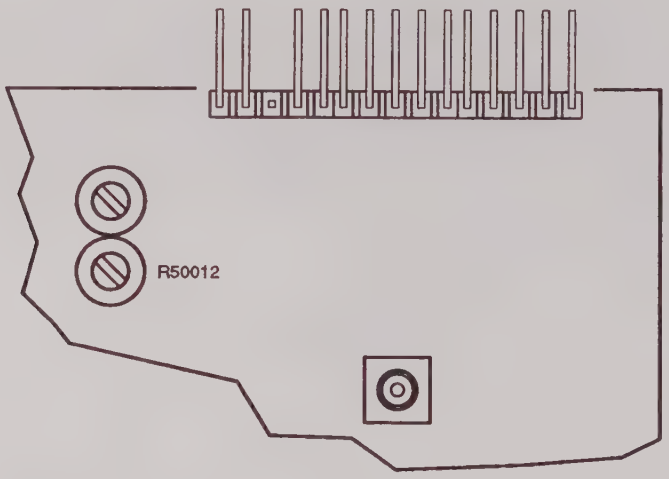

Discriminator #1 PC Board R1,R2 AUTO Threshold
Figure 2

6. Adjust R50012 ccw until AUTO function changes from Range 1 Reply to Range 2 Reply.

7. Vary Pulse Generator pulse width output and verify AUTO function range reply changes at threshold set in Step 6. Readjust R50012 as necessary.

APPENDIX C - TEST EQUIPMENT REQUIREMENTS

1. General

This Appendix contains a list of test equipment suitable for performing all testing procedures contained in this manual. Other equipment meeting specifications listed in this Appendix may be substituted in place of recommended models. Equipment listed in this Appendix may exceed minimum required specifications for some procedures contained in this manual.

2. Recommended Test Equipment

TYPE	MODEL	SPECIFICATIONS
3 dB Pad	HP8491A Option 003 or Equivalent	Quantity: 2 Frequency Range: dc to 12.4 GHz Accuracy: ±0.3 dB
6 dB Pad	HP8491A Option 006 or Equivalent	Frequency Range: dc to 12.4 GHz Accuracy: ±0.4 dB
10:1 Oscilloscope Probe	Included with TEK2465 or Equivalent	
20 dB Coupler	NARDA 3004-20 or Equivalent	Frequency Range: 4 to 10 GHz
Bandpass Filter	Generic	Bandwidth: 9275 to 9525 MHz Signal Response ±0.1 dB across bandwidth
Digital Multimeter	FLUKE 8010A or Equivalent	±30.00 V Range 3.5 Digit ±0.1% Basic dc Accuracy
Frequency Counter	HP5361B or Equivalent	Measurements: PRF and RF Frequency Range: 10 Hz to 10 GHz Accuracy: ±0.5 Hz/PRF ±1 kHz/RF (0.5 ppm, using external time base reference, if needed)

TYPE	MODEL	SPECIFICATIONS
Function Generator	WAVETEK 145 or Equivalent	Functions: Sine Wave Frequency: 1 kHz Output Level: 0 to 5 V_{P-P}
Heterodyne Monitor	W-JM2AC or Equivalent	
L-Band Signal Generator	HP8642B or Equivalent	Frequency Range: 1045 to 1250 MHz Output Level: -130 to +20 dBm Accuracy: ±1 dB
Modulation Meter	BOONTON 82AD	Carrier Frequency Range: 10 to 1200 MHz AM Frequency: 30 Hz to 100 kHz Accuracy: ±2% of reading
Oscilloscope	TEK 2465 or Equivalent	Bandwidth: dc to 100 MHz Vertical Accuracy: ±10% Time Accuracy: ±0.7% of Time Interval +0.6% of Full Scale Δ Time Accuracy: ±0.5% of Time Interval +0.3% of Full Scale
Power Meter	BOONTON 4200 or Equivalent	Frequency Range: 200 kHz to 12.4 GHz Power Range: -60 to +10 dBm Accuracy: ±0.085 dB
Power Meter Assembly	N/A	Refer to Appendix D.
Power Sensor	BOONTON 4200-4B or Equivalent	Power Meter Compatibility

TYPE	MODEL	SPECIFICATIONS
Pulse Generator	HP8111A or Equivalent	Frequency: 1 kHz Pulse Width: 0 to 5 µs Output Level: 0 to 5 V_{P-P}
Spectrum Analyzer	HP8566B or Equivalent	Frequency Range: 100 Hz to 22 GHz Resolution Bandwidth: 10 Hz to 3 MHz Amplitude Range: -134 to +30 dBm Display Accuracy Log: <±0.1 dB/dB ≤±1.5 dB/90 dB
TWT Amplifier	LOGIMETRICS 710X	Frequency Range: 8.0 to 12.4 GHz Output Level: 7 to ≥155 W (pulsed power)
X-Band Signal Generator	HP8683D or Equivalent	Frequency Range: 2.3 to 13 GHz Output Level: -130 to +10 dBm (Characterized) Accuracy: ±0.1 dB Internal Modulation: Pulse PRF: 10 Hz to 1 MHz Pulse Width: 50 ns to 50 µs
X-Band to L-Band Down Converter	N/A	Refer to Appendix D.

THIS PAGE INTENTIONALLY LEFT BLANK.

APPENDIX D - TEST EQUIPMENT CONSTRUCTION

1. Power Meter Assembly

A. General

The Power Meter Assembly measures pulse-modulated X-Band input power to the RD-301A. When used in testing, an X-Band Signal Generator output amplified by a TWT Amplifier provides the pulse-modulated X-Band input signal. The Power Meter Assembly is characterized and measurement readings determine the power level within 1 dB of the output signal to the RD-301A. The Power Meter Assembly verifies the accuracy of the RD-301A measuring radar power levels.

B. Assembly

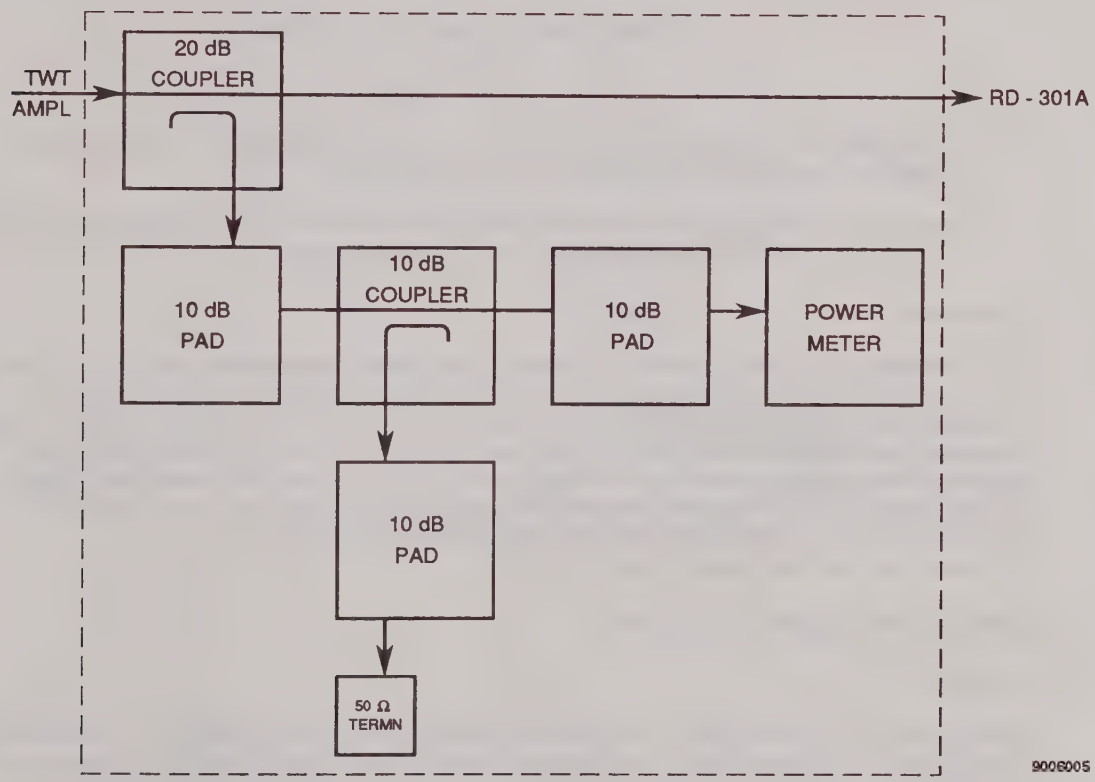

Power Meter Assembly
Figure 1

STEP	PROCEDURE
1.	Refer to Appendix D, Table 1 for list of recommended components or test equipment. Assemble Power Meter Assembly as shown in Appendix D, Figure 1.

EQUIPMENT/COMPONENT	MODEL	QUANTITY
10 dB Coupler	NARDA 4245B40 or Equivalent	1
10 dB Pad	WEINSCHEL 1-10 or Equivalent	3
20 dB Coupler	NARDA 3004 or Equivalent	1
50 Ω Termination	NARDA 378N or Equivalent	1
(Peak Pulse) Power Meter	HP8900D or Equivalent	1

Power Meter Assembly Equipment List
Table 1

2. Characterize Power Meter Assembly from 9295 to 9500 MHz, traceable to the National Institute of Standards and Technology.

   NOTE: Once equipment is assembled and characterized, equipment cannot be disassembled without recharacterization.

C Operation

The characterized Power Meter Assembly provides a referenced readout of the power level (Test RF Level) applied to the Serialized Coaxial Cable. For the Power Meter Verification in 2-2-2F(5) and Calibration in 2-2-2H(13), the Serialized Coaxial Cable and Waveguide Coupler are both considered. Power levels are adjusted by changing the level of the pulse-modulated output from the X-Band Signal Generator. The power levels are determined from the Power Meter Assembly readout referenced to the Power Meter Assembly characterization/correction chart.

2. X-Band To L-Band Down Converter

A. General

The X-Band to L-Band Down Converter converts the X-band signal, generated by the RD-301A, down to the L-Band signal, compatible with L-Band test equipment. Additionally, the X-Band to L-Band Down Converter allows further conversion to base band by using a Heterodyne Monitor. The base band signal allows Oscilloscope analysis of the X-Band signal.

B. Assembly

Assemble circuits as shown in Appendix D, Figure 2.

- The Low-Pass Filter passes frequencies <1300 MHz.
- The Mixer is a Watkins-Johnson WJM76C or Equivalent.
- The X-Band Conversion Signal Source is a phase-locked Signal Generator or fixed frequency oscillator. The X-Band Conversion Signal Source drives the mixer LO connector at a saturated level (+7 dBm). For RD-301A procedures, the X-Band conversion signal is 8.25 GHz.

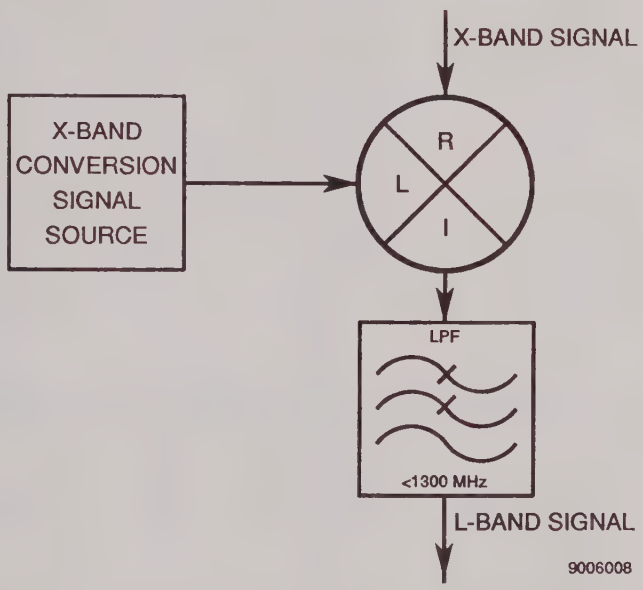

X-Band to L-Band Down Converter
Figure 2

THIS PAGE INTENTIONALLY LEFT BLANK.

APPENDIX E - METRIC/BRITISH IMPERIAL CONVERSION TABLE WITH NAUTICAL DISTANCE CONVERSIONS

TO CONVERT:	INTO:	MULTIPLY BY:	TO CONVERT:	INTO:	MULTIPLY BY:
cm	feet	0.03281	meters	feet	3.281
cm	inches	0.3937	meters	inches	39.37
feet	cm	30.48	m/sec	ft/sec	3.281
feet	meters	0.3048	m/sec	km/hr	3.6
ft/sec	km	1.097	m/sec	miles/hr	2.237
ft/sec	knots	0.5921	miles	feet	5280
ft/sec	miles/hr	0.6818	miles	km	1.609
ft/sec^2	cm/sec^2	30.48	miles	meters	1609
ft/sec^2	m/sec^2	0.3048	miles	nmi	0.8684
grams	ounces	0.03527	miles/hr	ft/sec	1.467
inches	cm	2.54	miles/hr	km/hr	1.609
kg	pounds	2.205	miles/hr	knots	0.8684
kg/cm^2	psi	0.0703	nmi	feet	6080.27
km	feet	3281	nmi	km	1.8532
km	miles	0.6214	nmi	meters	1853.2
km	nmi	0.5396	nmi	miles	1.1516
km/hr	ft/sec	0.9113	ounces	grams	28.34953
km/hr	knots	0.5396	pounds	kg	0.4536
km/hr	miles/hr	0.6214	psi	kg/cm^2	0.0703
knots	ft/sec	1.689	100 ft	km	3.048
knots	km/hr	1.8532	100 ft	miles	1.894
knots	miles/hr	1.1516	100 ft	nmi	1.645

THIS PAGE INTENTIONALLY LEFT BLANK.

APPENDIX F - ABBREVIATIONS

A

AC	Alternating Current
ac	Alternating Current
ADF	Automatic Direction Finder
ADJ	Adjustment
AFC	Automatic Frequency Control
AGC	Automatic Gain Control
AM	Amplitude Modulated
AMPL	Amplifier
ANLYZER	Spectrum Analyzer
ARINC	Aeronautical Radio, Inc.
ASCII	American Standard Code for Information Interchange
ATE	Automatic Test Equipment
ATTEN	Attenuation
AUX	Auxiliary

B

BCD	Binary Coded Decimal
BD	Board
BPF	Bandpass Filter

C

ccw	Counterclockwise
CHAN	Channel
cm	Centimeter
CMOS	Complementary Metal-Oxide Semiconductor
CONT	Control
Cont	Continued
CW	Continuous Wave
cw	Clockwise

D

D/A	Digital to Analog
dB	Decibel
dBc	Decibels relative to carrier
dBi	Decibels above isotropic
dBm	Decibels above one milliwatt
dc	Direct Current
DET	Detector
Div	Division
DLYD	Delayed
DMM	Digital Multimeter
DSCRM	Discriminator

E

EFF	Effective
EXT	External
Ext	External

F

FCC	Federal Communications Commission
FM	Frequency Modulated
FREQ	Frequency
Ft	Feet

G

GEN	Generator
GHz	Gigahertz (10^9)
GND	Ground

H

H	Henry
h	Hexadecimal
HET	Heterodyne
HI	High
hr	Hour
Hz	Hertz

I

IEEE	Institute of Electrical and Electronic Engineers
IF	Intermediate Frequency
INTL	Internal
I/O	Input/Output

K

kΩ	Kilo Ohm (10^3)
kg	Kilogram (10^3)
kHz	Kilohhertz (10^3)
km	Kilometer (10^3)
kts	Knots (Velocity)
kV	Kilovolt (10^3)
kW	Kilowatt (10^3)

L

LED	Light Emitting Diode
LO	Low
LPF	Low-Pass Filter
LRU	Line Repairable Unit

M

m	Meter
Max	Maximum
MDS	Minimum Discernible Level
mH	Millihenry (10^{-3})
MHz	Megahertz (10^{6})
Min	Minimum
MKR	Marker
MNL	Manual
MOD	Modulator
MON	Monitor
ms	Millisecond (10^{-3})
mV	Millivolt (10^{-3})

N

N/A	Not Applicable
NM	Nautical Mile
nmi	Nautical Mile
ns	Nanosecond (10^{-9})

P

PC	Printed Circuit
pF	Picofarad (10^{-12})
PLCS	Places
PM	Pulse Modulated
PPM	Pulse Position Modulated
ppm	Parts Per Million
PRF	Pulse Repetition Frequency
psi	Pounds per Square Inch
PWM	Pulse Width Modulated
PWR	Power

R

RCT	Rain Echo Attenuation Compensation Technique
RCV	Receive
RCVR	Receiver
REF	Reference
Ref	Reference
RF	Radio Frequency
RMS	Root Mean Square
R/T	Receiver/Transmitter
RTCA	Radio Technical Commission for Aeronautics

S

SCOPE	Oscilloscope
SCP	Oscilloscope
sec	Second
SEL	Select
S/N	Serial Number
STC	Sensitivity Time Control
SWP	Sweep
SYNC	Synchronization

T

TGS	Tangential Sensitivity Signal
TRIG	Trigger
TTL	Transistor-Transistor Logic
TWT	Traveling Wave Tube

U

UUT	Unit Under Test

V

V	Volts
VHF	Very High Frequency
V_P	Volts, Peak
V_{P-P}	Volts, Peak-to-Peak
VAC	Volts, Alternating Current
VCO	Voltage Controlled Oscillator
Vdc	Volts, Direct Current
VSWR	Voltage Standing Wave Ratio

W

W	Watts

X

XCVR	Transceiver
XMTR	Transmitter
XTAL	Crystal

ΔF	Delta F (Frequency Change)
Ω	Ohm
μF	Microfarad (10^{-6})
μs	Microsecond (10^{-6})

THIS PAGE INTENTIONALLY LEFT BLANK.

MP MASTER
MA30542